NIT NO : DoP/PNPM/CPIIUC/CETP/Alathur-E001

FOR

INSTALLATION OF 2 x 170 KL PER DAY = 340 KL PER DAY COMMON EFFLUENT TREATMENT FACILITY

ON LSTK BASIS

AT

ALATHUR, KANCHEEPURAM DISTRICT TAMILNADU

PREPARED & ISSUED BY

PROJECTS & DEVELOPMENT INDIA LTD.
(A Govt. of India Enterprise)
PDIL BHAWAN, A-14, Sector-1,
NOIDA U.P. (India)

And

CHENNAI PHARMA INDUSTRIAL INFRASTRUCTURAL UPGRADATION COMPANY
B-24, SIDCO Pharmaceuticals Complex Alathur
Kanchipuram District, Tamilnadu,
PIN 603110

NOTICE INVITING TENDER

NIT No.	DoP/PNPM/CPIIUC/CETP/Alathur-E001
Date of Issue	28 November 2016
Bid Closing Date & Time	19 December 2016 , 14.00 hrs
Bid opening Date & Time	19 December 2016 , 14.30 Hrs
Price Bid opening Date & Time	22 December 2016 , 14.30 Hrs
Venue of Bid opening	PDIL Bhawan, A-14, Sector-1, Noida, U.P.
Type of Bid	Two Bid System, PUBLIC
Earnest Money Deposit	INR 8,00,000/-
Pre Bid meeting	05 December 2016, 14.30 hrs at PDIL Bhawan, A-14, Sector-1, Noida, U.P.
Required Completion Period	8 Months from issuance of LOI (Duly commissioned)

Chennai Pharma Industrial Infrastructure Upgradation Company(CPIIUC), invites sealed Bids from eligible Bidders / Consortium for turnkey execution of conveyance, treatment and treated water distribution system for the Common Effluent Treatment Plant of 2 x 170 KLD = 340 KLD capacity as specified in the documents enclosed.

Following enclosed documents shall form part of invitation to Bid:

1. COMMERCIAL DOCUMENTS:

2. TECHNICAL SPECIFICATIONS

For preparation and submission of Bids, evaluation and comparison of Bids, kindly refer commercial documents.

NOTE:

1. Bidders are requested to submit their prices in price schedule F-33,
2. Bidder shall ensure the submission of unpriced copy of each price schedule as mentioned above in the unpriced Techno-commercial offer indicating "Quoted / Not quoted" against each head of price schedule.
3. Please furnish two valid Email IDs for further communication.
4. The price bid opening date and time shall be communicated later on to the bidders who shall qualify for the price bid opening.

For Chennai Pharma Industrial Infrastructure Upgradation Company

28/11/2016

Authorised Representative

(B. SETHURAMAN)

COMMON EFFLUENT TREATMENT PLANT(CETP) AT ALATHUR UNDER
GOI's CLUSTER DEVELOPMENT PROGRAMME
FOR PHARMA SECTOR (CDP-PS)

Master Index

PART A : COMMERCIAL PART

SL. NO.	DESCRIPTION
1	Letter inviting Bids
2	Instruction to Bidders
3	General Conditions of Contract
4	Schedule of Price
5	Summary of T&C
6	Exceptions & Deviations
7	Formats for EMD & PBG

PART B : TECHNICAL PART

SL. NO.	DESCRIPTION
1	PROJECT DESCRIPTION & PROCESS PART
2	CIVIL WORKS AND SPECIFICATIONS
3	ELECTRICAL WORKS AND SPECIFICATIONS
4	INSTRUMENTATION WORKS AND SPECIFICATIONS
5	PIPING WORKS AND SPECIFICATIONS
6	STATIC AND ROTARY EQUIPMENT SPECIFICATIONS
7	CONSTRUCTION, ERECTION AND PRECOMMISIONING
8	SITE WORKING AND SAFETY CONDITIONS
9	DRAWINGS (INCLUDING P&ID)
10	ADDITIONAL MAKE OF EQUIPMENT

SECTION-1.0

INSTRUCTION TO BIDDERS

COMMON EFFLUENT TREATMENT PLANT (CETP)

AT ALATHUR

UNDER GOI's

CLUSTER DEVELOPMENT PROGRAMME

FOR

PHARMA SECTOR(CDP-PS)

TABLE OF CONTENTS

SL.NO	DESCRIPTION
1	Introduction
2	Site Information
3	Cost of Bidding
4	Bidding Documents
5	Clarification of Bidding Documents
6	Amendment of Bidding Documents
7	Language of Bid
8	Documents comprising the Bid
9	Bid Price
10	Bid Currencies
11	Pre-Qualification Criteria
12	Consortium Bid
13	Deleted
14	Bid Security and Earnest Money Deposit
15	Period of Validity of Bids
16	Format & signing of Bids
17	Sealing & Marking of Bids
18	Late Bids
19	Deleted
20	Opening & Clarification of Bids
21	Deleted
22	Deleted
23	Evaluation & comparison of Bids
24	Terms of Payment
25	Contacting the Owners
26	Bid Conformity
27	Owner Right to Accept any Bid and to Reject any or all Bids.
28	Deleted
29	Notification of Award(Letter of Intent)
30	Signing of Contract
31	Performance Security
32	Completion Period
33	Deleted
34	Deleted
35	Contractors data

INTRODUCTION AND PROJECT SYNOPSIS:

1.0 INTRODUCTION

Department of Pharmacutical(DoP), Ministry of Chemicals & Fertilizers, Government of India is running a Cluster Development Programme for Pharma Sector(CDP-PS), in Public-Private-partnership (PPP)mode, wherein the Clusters are provided with one time grant-in-aid for developing common facilities Centres(CFCs). The Programme is to be implemented by selected Special Purpose Vehicles (SPVs) for respective Clusters.

Department of Pharmacutical(DoP) has appointed **Project & Development India Limited(PDIL),** a primier Engineering Cunsultancy Organisation, as it's Consultant for the Programme.

Chennnai Pharma Industrial Infrastructure Upgradation Company(CPIIUC), hereinafter referred to as CPIIUC is a Special Purpose Vehicle (SPV) which has been selected for participating in CDP-PS for it's Cluster situated at Alathur, Kancheepuram district Tamilnadu, India.

CPIIUC has planned to implement the CDP-PS in it's Cluster by setting up a Common Effluent Treatment Plant(CETP) as per the specifications detailed elsewhere in this document.

1.1 Scope of Proposal:

Lumpsum Turnkey (LSTK) execution of Conveyance system from individual units to the CETP area, the complete CETP and the distribution system of treated water through Hydro Pnuematic System back to the individual units and conveyance of the reject from R.O. plant from the Reject Water Tank to the Oxidation Pond area in the site

OF

CETP of 340 KLD (2 x 170 KLD) capacity with core process of primary electrolytic treatment, followed by secondary biological, tertiary and R.O. plant, including design, engineering, manufacture, procurement, supply to site, storing, installation, erection, testing, trial run and commissioning, establishing performance guarantee, operation and maintenance for one year from date of commissioning

OF

All mechanical, electrical, instrumentation items in the CETP, including interconnecting piping and cabling within battery limits, including complete civil construction works – water retaining structures, Pre Engineered Building (PEB) as per schedule

INCLUDING

All statutory clearances as required, from various Departments, as applicable, before, during and after the installation of the CETP

AND INCLUDING

Custom made Software for providing online data and information about the performance of the treatment plant and the parameter profiling across the treatment, through a suitable web application and mobile application program with dedicated domain and restricted access

AND INCLUDING

Complete operation and maintenance of the entire scheme – conveyance, treatment, distribution – including supply of chemicals, consumables, mechanical spares, electrical spares, instrumentation spares and other spares required for plant operations, manpower for plant operations and laboratory for analysis (for one year from date of commissioning) and replacement of media as required, and including SUPPLY of two years spares for plant operations at the time of commissioning the CETP itself.

2.0 SITE INFORMATION:

2.1 The proposed CETP is to be set up at Alathur which is about 50 kms from main Chennai city on the O.M.R. (Old Mahabalipuram Road) next to Thiruporoor, in the Kancheepuram district of Tamilnadu. The nearest major railway station is Chennai Central / Chennai Egmore stations, which is about 75 kms from the site and the nearest airport is Chennai Airport which is about 40 kms from the site

3.0 COST OF BIDDING

3.1 The Bidder shall bear all costs associated with the preparation and submission of the Bid, and CPIIUC (also referred to, hereinafter, as Purchaser/Owner) will, in no case, be responsible or liable for these costs, regardless of the conduct or outcome of the bidding process. In case plant visit is required by Bidder before submitting the bid, it shall be to bidder's account. No adjustment in price will be accepted on the basis of insufficient knowledge.

4.0 BIDDING DOCUMENTS

The Bidder is expected to examine all instructions, forms, terms and conditions in the bidding documents. The invitation to Bid together with all its attachments thereto shall be considered to be read, understood and accepted by the Bidder, unless deviations are specifically stated in seriatim by the Bidder. Failure to furnish all information required by the bidding documents or submission of a Bid not substantially responsive to the bidding documents in every respect and insufficient no. of copies will be at Bidder's risk and may result in the rejection of the Bid.

5.0 CLARIFICATION OF BIDDING DOCUMENTS

A prospective Bidder requiring any clarification shall obtain the same from Owner's office in writing by Fax/Email or by letter or in person so as to ensure submission of Bid on or before Bid closing date. The Owner will respond in writing to such queries expeditiously. However, no extension in bid submission shall be granted on this account.

6.0 AMENDMENT OF BIDDING DOCUMENTS

6.1 At any time prior to the deadline for submission of bids, the Owner for any reason, whether at its own initiative or in response to a clarification requested by a prospective Bidder, may modify the bidding documents by amendment thereto.

6.2 The amendment will be notified on PDIL's/CPIIUC/DoP's Websites; Bidders to visit the websites regularly. Moreover, the amendments will be notified in writing or by Email / Fax or letter to all responding Bidders and will be binding on them.

6.3 In order to afford prospective Bidders reasonable time in which to take the amendment into account in preparing their bids, the Owner may, at their discretion, extend the deadline for the submission of bids.

6.4 The Owner/Purchaser may, at their discretion, extend the deadline for the submission of bids by amending the bidding documents in accordance with Articles 6.1 to 6.3 above, in which case all rights and obligations of the Owner/Purchaser and Bidders previously subject to the deadline will thereafter be subject to the deadline as extended.

7.0 LANGUAGE OF BID

7.1 The Bid prepared by the Bidder and all correspondence / drawings and documents relating to the Bid exchanged between the Bidder and the Owner/ Purchaser shall be written in English language, provided that any printed literature furnished by the Bidder may be written in another language so long as accompanied by English translation in which case, for purpose of interpretation of the Bid, the English translation shall govern.

7.2 Metric measurement system shall be applied for weights and dimensions other than pipes and piping connections. All piping material including but not limited to pipes, flanges, fittings, valves etc., shall conform to **RELEVANT I.S. SPECIFICATIONS**.

8.0 DOCUMENTS COMPRISING THE BID

8.1 INFORMATION PROVIDED IN THE TENDER DOCUMENT:

This tender document contains the following information to enable the Bidder to understand the job, prepare and submit his tender:

1. Instruction to the Bidders
2. Project Specifications

The Project Specifications provides the TECHNICAL SPECIFICATIONS of the Project. This component contains the process description, design basis – quantity and quality, what are the main components in the Project, design and sizing of civil, mechanical, electrical and instrumentation items in the Project, an indicative Bill of Quantity for each item in the Project and the relevant drawings. All this is provided for the Bidder to evaluate.

3. Drawings

The following drawings are provided as part of this tender document:

- Indicative Conveyance and Distribution System Routing Plan
- Indicative Layout of the Treatment Plant Area
- Indicative Plant & Machinery Layout
- Indicative P&I drawing
- Indicative Electrical Single Line Drawing
- Indicative Panel Layout
- Indicative Cable Routing Drawing

4. General Conditions of Contract
5. Price Bid Format
6. Other Forms

8.2 PROCESS OF TENDERING AND DOCUMENTATION

The Bid will be submitted in three parts. Each part will be enclosed in one envelope. THESE THREE SEPARATE ENVELOPES WILL BE ENCLOSED IN ONE SINGLE OUTER ENVELOPE. Each envelope will contain information pertaining to one part.

Part1 will be the PREQUALIFICATION DOCUMENTS AND E.M.D.
Part 2 will be the TECHNICAL BID & UNPRICED COMMERCIAL BID
Part 3 will be the PRICE BID

Part 1&2 will be opened on the expiry of the deadline for submission of the tender

Step 1 of the tendering process: Opening of Part 1

The evaluation of the Part 1 submitted by all the Bidders will be done first. Bidders not submitting the requisite documentation for Pre-Qualification may be rejected without seeking any clarification.

Part II and Part III envelopes of those Bidders who are pre-qualified will only be taken up for further process.

Step 2 of the tendering process: Evaluation of Part 2

The Technical and Non Technical Section of the tender document contains all the specifications of this Project. The Bidder is to only submit his acceptance of these specifications and TECHNICAL DEVIATIONS with justification for the same.

It is to be noted that NO DEVIATION IN THE NON-TECHNICAL SECTION is generally allowed. The Bidder / Consortium is expected to comply to scope, battery limits, payment terms, completion schedule and warranty clauses etc.

The Unpriced Technical Bids will be evaluated by CPIIUC / PDIL.

In case a meeting is considered to be required by the Owner/PDIL, the same will be called for to ensue that the technical deviations are discussed and the decisions are finalized before the Price Bid opening.

However, such acceptance / rejection of technical deviation (points) will have no impact on the PRICE BID. The original price bid submitted with the tender will hold good.

Step 3 of the tendering process: Opening of Price Bid (Part-3)

Step 4 of the tendering process : Finalization of the Successful Bidder

8.3 **Part-I Bid Security or Earnest Money Deposit (EMD) & Pre Qualification Documents**

a) The bid shall be accompanied by an EMD as outlined in Article-14 along with the documents relevant to pre-qualification criteria as required and shall be submitted in a separate cover to be marked with “NIT/ITB Number, Bid due date & Part-I of the Bid".

b) The envelope containing the EMD and PQ documents will be opened before opening of Part-II.

BIDDER SHOULD ENSURE COMPLETENESS OF ALL REQUISITE DOCUMENTATION FOR HIS PREQUALIFICATION, FAILING WHICH, HIS BID WILL NOT BE TAKEN UP FOR FURTHER PROCESS.

8.4 **Part II Technical & Un-priced Commercial Bid**

8.4.1 Technical Bid shall include/indicate but not limited to the following:

NIT/ITB No._____ Due Date:_____

1. Acceptance of the Technical Specifications of the N.I.T./ITB. The Bidder is to state, in his Letter Head, his complete acceptance of all the terms and conditions and specifications of the entire tender document, except for the deviations as put forth under separate section. It is to be noted that, deviations are not allowed in the choice of technology / process and in the commercial terms and conditions. Any deviation, as sought by the Bidder, will have no impact in the Price Bid submitted and no revision of Price Bid is allowed.

2. Schedule of Deviations - Technical (if any) to be provided by the Bidder in the format as given in this document

3. Performance Guarantee figures with respect to **Power Consumption**

4.. Makes of major equipment considered by the Bidder.

5. List of spare parts for Two years' operation and maintenance

6 Bidder should certify that they will give shop drawings of main equipment to enable repair, and maintenance after installation at Site. Editable copies of 'as built' drawings shall be furnished.

7. Acceptance of the Completion schedule as given in this N.I.T.

8.4.2 Unpriced commercial Bid shall include/indicate the following:

NIT/ITB No._____ Due Date:_____

All the details pertaining to the Price Bid EXCEPT the price figures.

Price schedule completed in accordance with **Articles 9 and 10.**

Summary of terms and conditions duly filled and signed as per **Attachment F-70**

Un-priced copy of price Bid indicating **''Quoted / Not quoted''** against each head of price schedule.

Confirmation of all **Commercial terms and conditions** of offer indicating terms of payment, firm prices, completion period, bid validity, Taxes and duties considered etc.

Confirmation that validity of bid is 120 d**ays** from the Technical Bid opening date indicated in the cover letter of NIT/ITB.

Price to be on Lumpsum Turnkey Basis including manufacture, procurement, packing and forwarding, freight to site, transit insurance, unloading and loading, storage at site, installation, erection, testing, trial run and commissioning along with operation and maintenance of one year as per Scope of Work given elsewhere in this document

8.5 **Part-III - Priced Bid**

8.5.1 The priced bid as per enclosed **Form F-33** shall be submitted in a separate sealed Envelope marked Part-III Priced Bid. Bid should include the Bid price and other related costs, in accordance with **Article 9** and appropriate Price Schedule formats.

9 **BID PRICE**

9.1 The Bidders shall quote firm lump sum price for the entire scope of work as per technical specifications given in schedule of prices of NIT and shall give detailed break-up as per **format F – 33.**

9.2 The Bidder to include Charges for inspection/ testing in the offer as per requirement of technical documents of ITB.

9.3. Quoted Prices shall be Firm and shall be valid for entire period of execution of Contract.

9.4 Prices shall be written in both words and figures. In the event of difference, the prices in words shall be valid and binding. Unit prices shall be considered correct in the event of any discrepancy with regard to total price.

10.0 **BID CURRENCIES**

BID Price Shall be quoted in Indian Rupees only.

11.0 **PRE-QUALIFICATIONS CRITERIA**

The interested parties should meet the following pre-qualification Criterion:

11.1 Technical Criteria

THE BIDDER / ANY MEMBER OF CONSORTIUM (HAVING MAXIMUM TWO MEMBERS) SHOULD HAVE COMPLETED EFFLUENT TREATMENT PLANT IN PHARMACEUTICAL SECTOR FOR CAPACITY UP TO 100 KLD USING ELECTROLYTIC PROCESS INVOLVING ELECTRO COAGULATION TECHNOLOGY.

11.2 Financial Criteria

11.2.1. The Bidder / member(s) of the Consortium must have executed sewage / waste water treatment plants, during last seven years at least:

One completed contract with contract value not less than Rs. 300 Lakh

Or

Two completed contract with contract value not less than Rs. 150 lakh

Or

Three completed contract with contract value not less than Rs. 100 Lakh

Bidder **/** lead Bidder of Consortium shall submit copies of work order and completion certificates as documentary proof for the same.

11.2.2 Total annual financial turnover of the Bidder / lead Bidder of Consortium for the last 3 preceding financial years ending 31st March 2016 should be equal to or more than Rs. 246 lakh. Bidder / lead Bidder of Consortium shall submit Annual Report (Balance Sheet and Profit & Loss account) for the last 3 years ending March 2016

11.2.3 Net Worth of the Bidder / Lead Bidder of the consortium should be positive during the last 3 preceding financial years ending 31st March 2016.

12.0 **CONSORTIUM BIDS**

12.1 In case of Consortium BID, in their own interest, the BIDDERS are advised to investigate capabilities, availability of expertise and resources such as experienced personnel, financial soundness, past experience and concurrent engagements of constituting partners / members.

Consortium of BIDDERS, if any, must clearly define role/ scope of work of each partner/ member in the Bid.

Further, the CONTRACT for a Consortium must accompany the BID and should clearly define the leader of such a Consortium, who shall co-ordinate with OWNER on behalf of the Consortium, during the period which the BID is under evaluation by OWNER or is being negotiated with OWNER as well as during execution of WORK, in the event the WORK is awarded.

All the members of the Consortium shall be jointly and severally responsible for the execution of the WORK in accordance with the CONTRACT.

12. 2 A consortium once established at the time of submitting the BID shall not be allowed to be altered with respect to constituting members of the consortium or their respective roles/scopes of work, except if and when permitted in writing by OWNER.

12. 3 If during the evaluation of BID a Consortium proposes any alterations / changes in orientation of consortium or replacement or inclusion or exclusion of any partner(s)/ member (s) of the consortium which had originally submitted the BID, to derive some advantage / benefits based on any development(s) having come to his knowledge at any time, the BID submitted by such a consortium may be rejected.

12.4 The Consortium should submit the copy of the MoU signed between the consortium members, with their respective role in the Scope of work, clearly define the Leader of the Consortium in the MoU and clearly authorize the signatory.

13.0 Deleted

14.0 **BID SECURITY/EARNEST MONEY DEPOSIT (EMD)**

14.1 The Bidder shall furnish as part of his Bid, EMD of Rs.8,00,000/- (Rupees Eight Lakhs Only) in the form of bank guarantee**,** issued or counter guaranteed by any of the Indian nationalised/ scheduled banks (except Cooperative and Gramin Bank). EMD can also be furnished in the form of Accounts Payee Demand Draft in favour of "**Chennai Pharma Industrial Infrastructure Upgradation Company"** and payable at **CHENNAI** No interest shall be payable on EMD.

14.2 Any Bid not accompanied with EMD shall be rejected by the Owner as non-responsive.

14.3 The EMD will be returned to the unsuccessful Bidders on acceptance of one of the invited bids or when the Bid is cancelled by Owner.

14.4 The successful Bidder's EMD will be discharged upon the Bidder accepting the Contract and furnishing the Security Deposit Bank Guarantee.

14.5 In the following events, the EMD may be forfeited without prejudice to any other right or remedy of Owner:

a) If a Bidder withdraws his Bid during the period of Bid validity specified by the Bidder on the Bid form or

b) In the case of a successful Bidder, if the Bidder fails:

- To sign the Contract in accordance with **Article 30, or**
- To furnish performance Security in accordance with **Article 31.**

15.0 **PERIOD OF VALIDITY OF BIDS**

15.1 Bids shall be kept valid for at least 120 days from the last date of submission of the Bid. A Bid valid for a shorter period may be considered as non-responsive and liable to be rejected by the Owner.

15.2 In exceptional circumstances, the Owner may solicit the Bidder's consent to an extension of the period of validity. The request and the responses thereto shall be made in writing through a letter or by fax/Email. A Bidder having been granted the request, will neither be required nor permitted to alter the Bid.

16.0 **FORMAT AND SIGNING OF BID**

16.1 The Bid is to be signed by the authorized representative of the Company.

In case of Corporation / Company the bid must be signed with the legal name of the Corporation / Company by the President, Managing Director or by the Secretary or other person or persons authorized to bid on behalf of such Corporation / Company in the matter, with the official seal of the Company with Board Resolution

Bid by a partnership firm must be furnished with full names of all partners and be signed with the partnership name followed by the signature and designation of one of the authorized partners or authorized representative(s).

In case of proprietorship organization, the bid is to be signed by the Proprietor and he/she needs to submit the PAN CARD details for verification by the Owner.

Bids submitted by Consortium should be signed by the authorized representative of the Consortium or by the Lead Bidder.

16.5 The Bidder’s name stated on the proposal shall be the exact legal name of the firm.

16.6 Erasure or other changes in the bid documents shall be over the initials of the person signing the bid.

16.7 Bids not conforming to the above requirements of signing may be disqualified.

16.8 The Signatory should sign in all the pages of the Bid Document

17.0 **SEALING AND MARKING OF BIDS**

17.1 The Bidders shall submit the offer in three inner envelops (as elaborated under Article 8) put under an outer envelope superscribed with **"COMMON EFFLUENT TREATMENT PLANT(CETP) UNDER GOI's CLUSTER DEVELOPMENT PROGRAMME FOR PHARMA SECTOR(CDP-PS)"**

NIT/ITB NO._____BID CLOSING DATE:_____

The outer envelope shall indicate the name and address and Contacts of the bidder to enable the bid to be returned unopened in case it is received late.

The Bid should be submitted thru Post addressed to:-

Shri P. K. Singh,
GM (Civil)
Projects & Development India Ltd.,
PDIL Bhawan,
A-14, Sector - 1,
Noida-201301,
Distt: Gautambuddh Nagar
Uttar Pradesh

17.2 If the outer envelope is not sealed and marked as required by clause 17.1 above, the Owner will assume no responsibility for the Bid-misplacement or pre-mature opening.

18.0 **LATE BIDS**

18.1 Any Bid received after the deadline for submission of bids indicated on main body of Invitation to Bid or any other date extended in writing may be rejected.

19.0 Deleted

20.0 **OPENING AND CLARIFICATION OF BIDS**

20.1 The bids will be opened in presence of bidders' representatives who wish to be present.

20.2 Only techno-commercially acceptable bidder's representative shall be invited to attend Price Bid Opening who will be given adequate notice to attend the Bid opening.

23.0 EVALUATION AND COMPARISON OF BIDS

23.1 The Owner will evaluate and compare only those bids, which are determined to be substantially responsive.

23.2 The Owner's evaluation of a Bid shall be done on the basis of "Cost as completed at Site" and shall comprise of :

a) Total LSTK Contract Price as given in price schedule (F – 33).

b) Difference in Guaranteed Operating/Works cost discounted at a rate of SBI BASE RATE + 1% (15.45 % p.a.) for a period of 15 years.

WORKS COST:
Loading shall be done to take care of the performance and productivity of the process and equipment offered. In case the works cost are different for different bidders, differential works cost over the minimum quoted shall be calculated as given below.

LOADING TOWARDS WORKS COST =Differential works cost per Kilolitre X Daily Output in Kilolitre X 300 X 5.7223

Where:300=Operating Days /year
5.7223-The discount factor calculated for at the rate of (SBI BASE RATE of 14.45% + 1%) 15.45% p.a. on yearly basis for the period of 15 years.

c) Any clarification / confirmation having reduced price implications received from Bidder after price Bid opening shall be considered only for ordering purposes and not for evaluation purposes. However, clarification/confirmations having additional price implication if accepted shall also be considered for evaluation purpose.

d) Any other cost resulting due to disagreement of bidder from NIT conditions will be loaded proportionately or highest as quoted by any other bidder.

e) NIT CONDITIONS:
It is understood that the Bid should be free from Deviation on Non-Technical Specification such as Payment Terms, Completion schedule, performance bank guarantee, warranty period, Price Reduction Clause (Damages) etc, as the same is not acceptable.

24.0 TERMS OF PAYMENT

.

24.1 The payment to Contractor will be made as per terms of payment set forth herein. No payments shall become due and payable before :

a) Acceptance of Letter of Award.

b) Submission of Security Deposit Bank Guarantee for 10% of the Total Contract Price and acceptance of the same by Owner.

24.2 Payment Schedule:

The Owner provides the following payment terms for the various works in the LSTK contract. These terms are not flexible and the Bidder / Consortium must comply with the same

Stage wise payment schedule

Note: For advance payment to be issued by Owner to the Vendor, the latter has to produce Indemnity Bond for the value

24.2.1 FOR CIVIL WORKS:

24.2.1.1 For Civil Works related to the Treatment Process, the payment methodology will be in the following stages, based on MILESTONE method on site progress duly certified by CPIIUC/PDIL subject to the capping as per Lump Sum Price quoted in the price Schedule:

Progress Milestone	completion projection (days)	Payment % to contractor
Advance for detailed engineering package	30	5
Excavation, PCC, column up to ground level	15	10
On completion of ground floor slab	30	10
On completion of walls up to 2.00 mts height	20	10
On completion of walls for full height	20	10
On completion of roof slab	15	10
On completion of columns up to truss level, brick work & plastering all round	20	10
On completion of truss work	20	10
On completion of hydro testing	15	10
Final finishing works – all complete	15	5
Against Performance Guarantee test run of 48 hrs.		10
Total	200	100

24.2.1.2 For civil works related to Conveyance and Distribution system, the payment methodology will be in the following stages , based on MILESTONE method on site progress duly certified by CPIIUC/PDIL subject to the capping as per Lump Sum Price quoted in the price Schedule: (parallel activity with above civil works)

Progress Milestone	completion projection (days)	Payment % to contractor
Advance for detailed engineering package	30	5
Excavation of the conveyance & distribution route	30	10
Road crossing works - start to completion	20	20
Completion of all aspects related to intermediate conveyance sump	30	50
Completion of all finishing works related to conveyance and distribution systems	10	5
Against Performance Guarantee test run of 48 hrs.		10
Total	120	100

24.2.2 FOR PLANT & MACHINERY:

24.2.2.1 For Plant & Machinery works related to the Treatment Process, the payment methodology will be in the following stages, based on MILESTONE method on site progress duly certified by CPIIUC/PDIL subject to the capping as per Lump Sum Price quoted in the price Schedule:

Progress Milestone	completion projection (days)	Payment % to contractor
Advance for detailed engineering package	30	10
Ordering and supply to site	90	50
On completion of installation and erection of equipment	30	20
On completion of commissioning	50	10
Against Performance Guarantee test run of 48 hrs.		10
Total	200	100

24.2.2.2 For plant & machinery works related to Conveyance and Distribution system, the payment methodology will be in the following stages, based on MILESTONE method on site progress duly certified by CPIIUC/PDIL subject to the capping as per Lump Sum Price quoted in the price Schedule:

Progress Milestone	completion projection (days)	Payment % to contractor
Advance for detailed engineering package	30	10
Ordering and supply to site	50	50
On completion of installation and erection of equipment	20	20

On completion of commissioning	20	5
Against Performance Guarantee test run of 48 hrs.		10
Total	120	100

Note: The Payment Schedule and Project Schedule shown in this ITB are indicative. After the award of contract, the selected LSTK contractor is required to submit Payment Schedule and Project Schedule, to ensure Commissioning of the Plant in 8 months in all respect, which will be reviewed and approved by the CPIIUC/PDIL/DoP.

25.0 **CONTACTING THE OWNER**

Any effort by a Bidder to influence the Owner in the Owner's Bid evaluation, Bid comparison or Contract award decisions may result in the rejection of the Bidder's Bid.

26.0 **BID CONFORMITY**

The Owner will determine to their satisfaction whether the Bidder selected is qualified in their opinion to satisfactorily perform the Contract.

27.0 **OWNER'S RIGHT TO ACCEPT ANY BID AND TO REJECT ANY OR ALL BIDS.**

Notwithstanding anything to the contrary contained herein, the Owner reserves the right to accept or reject any Bid, and to annul the bidding process and reject all bids, at any time prior to (award of NOTICE OF ACCEPTANCE), without thereby incurring any liability to the affected Bidder, or Bidders, or of any obligation to inform the affected Bidder, or Bidders of the grounds for the Owner's action.

If the Bid offered by the Lowest Bidder i.e. L1 is not found to be substantially responsive as determined by the Owner, then the Owner reserves the right to negotiate with L2 and upwards and award the contract to such Bidder that the Owner feels will be able to meet the technical and commercial obligations of the Contract. However, such negotiations will be on the basis of matching with the LEAST OFFERED PRICE i.e L1 price only and no additional cost will be allowed for the same.

28.0 Deleted

29.0 **NOTIFICATION OF AWARD (LETTER OF INTENT)**

29.1 The Owner will award the Notification (Letter of Intent) to the successful bidder

29.2 Prior to the expiration of the period of Bid validity the Owner will notify the successful Bidder by letter or fax to be confirmed by letter that the Bid has been accepted and the "Letter of Intent" as above will constitute formation of Contract.

29.3 The successful bidder on receipt of "letter of intent" which may be in the form of Fax of intent or other mode shall convey his acceptance by return e-mail/ fax and to be confirmed by letter within 7 day failing which it will be deemed that LOI is rejected unconditionally.

29.4 In such situations i.e. 29.3, the Owner may negotiate with L2 upward Bidders and may fix contract based on L1 price.

29.5 Completion period/schedule shall be counted from the date of "issuance of Fax/ Letter of Intent".

30.0 **SIGNING OF CONTRACT**

30.1 Owner will send three copies of Contract to the successful Bidder who, within 10 days of the receipt of the same, shall sign and return two copies to the Owner as a token of his unconditional acceptance failing which Owner has the right to cancel/withdraw the Contract and forfeit the Bid Security.

30.2 In such situations i.e. 30.1, the Owner may negotiate with L2 upward Bidders and may fix contract based on L1 price

31.0 **PERFORMANCE SECURITY**

31.1 Within 30 days of signing the contract, the successful Bidder shall furnish to the Owner the Security Deposit Bank Guarantee equivalent to 10% of the total Contract value in the form of a bank guarantee issued or counter guaranteed by any of the nationalised/ Scheduled Indian banks (except cooperative & Gramin Bank). The bank guarantee shall be in the currency quoted by Bidder The bank guarantee for Security deposit shall be valid for Completion period. However, the Contractor shall be required to Extend the Validity of this Bank Guarantee after Completion Period till the Defect Liability Period/Warranty Period (DLP) i.e. 12 moths with a claim period of 3 months otherwise 10% amount from payment shall be retained till DLP.

31.2 Deleted

31.3 Failure of the successful Bidder to comply with the requirements of Article 30 or Article 31 shall constitute sufficient grounds for the annulment of the award in which event the Owner may make the award to the other responsive Bidder or call for new bids, without prejudice to Owner's right and remedies as set forth in Article 25 of general conditions of purchase.

31.4 The non-judicial Stamp paper of appropriate value or equivalent document value prevailing in the country of the Bidder shall have to be purchased in the name of the bankers executing the bank guarantee and not in the name of the Bidders.

31.5 The Performance Guarantee would include the performance of the machinery as well as the performance of the process of treatment.

32.0 **COMPLETION PERIOD.**

32.1 The Project is to be commissioned within 8 Months from the date of signing the contract as per the Schedule enclosed in the Technical Specifications of this tender document + 12 Months Defect Liability Period from date of Commissioning. The Contractor will have to rectify all the defects notified within the Defect Liability Period.

32.2 Failure to complete within the above schedule will attract Liquidated Damages for Delay.

33.0 Deleted

34.0 Deleted

35.0 **CONTRACTOR'S DATA**

35.1 In addition to compilation of document/drawings/data required in the technical specifications, Contractor's data as noted on the attached Contractor data requirements is also to be furnished by the dates noted in the applicable column. Contractor is to comply with all “instructions" detailed in this form. All Contractor data are to be submitted to Owner.

35.2 Contractor shall incorporate Contract number, requisition number(s), item number(s), item(s) description and tag number(s) on all Contractor data as called for on the attached form and any other data required by applicable specifications pertaining to the Contract.

35.3 The reproducible drawings furnished by Contractor must be of top quality from which legible and clearly defined prints can be obtained. Drawings not meeting this requirement will be returned until acceptable reproducible are received. Installation, operation and maintenance data, when called for on the attached Contractor data requirements form, shall include instruction books, dimensional and sectional drawings, recommended spare parts list and interchangeability, lubricant recommendation and complete parts list with detailed information for each part.

SECTION-2.0

GENERAL CONDITIONS OF CONTRACT

COMMON EFFLUENT TREATMENT PLANT(CETP)

At Alathur

UNDER GOI's CLUSTER DEVELOPMENT PROGRAMME

FOR PHARMA SECTOR

(CDP-PS)

TABLE OF CONTENTS

1.0	DEFINITIONS
2.0	SCOPE OF CONTRACT
3.0	STANDARDS
4.0	INSTRUCTIONS, DIRECTIONS AND CORRESPONDENCE
5.0	CONTRACT CONFIRMATION
6.0	MODIFICATIONS IN CONTRACT
7.0	USE OF CONTRACT DOCUMENTS AND INFORMATION
8.0	PATENT RIGHTS
9.0	PERFORMANCE SECURITY
10.0	INSPECTION, TESTING AND EXPEDITING
11.0	TIME SCHEDULE AND PROGRESS REPORTING
12.0	PACKING & PRESERVATION
13.0	COMPLETION AND DOCUMENTS
14.0	INSURANCE
15.0	DESPATCH, TRANSPORTATION AND SHIPPING INSTRUCTIONS
16.0	INCIDENTAL SERVICES
17.0	SPARE PARTS, MAINTENANCE TOOLS AND LUBRICA NTS
18.0	WARRANTIES AND GUARANTEES
19.0	ASSIGNMENT
20.0	SUBCONTRACT
21.0	JOINT AND SEVERAL RESPONSIBILITIES
22.0	DELAYS IN THE CONTRACTOR'S PERFORMANCE
23.0	DAMAGES / PRICE REDUCTION
24.0	REPLACEMENT REJECTIONS, REMOVAL OF REJECTED EQUIPMENT AND REPLACEMENT
25.0	TERMINATION OF CONTRACT
26.0	FORCE MAJEURE
27.0	RESOLUTION OF DISPUTES/ARBITRATION
28.0	GOVERNING LANGUAGE
29.0	NOTICES
30.0	TAXES AND DUTIES
31.0	INSTRUCTION FOR INVOICING AND PAYMENT DOCUMENTATION
32.0	SPECIFICATIONS
33.0	GENERAL

1.0 DEFINITIONS

In this General Conditions of Contract the following terms shall be interpreted as indicated.

1.1 "**Contract** shall mean and include invitation to bid, agreement entered into between Owner and the Contractor. Technical Specifications, drawing(s), General Conditions, Special Conditions, commercial documents, general and special instructions issued from time to time by the Owner in writing, tender documents, letter of acceptance of bid, Letter of Intent (LOI), work order, accepted schedule of rates and all those documents taken together and as modified from time to time in writing shall be deemed to form and construe one document.

1.2 **"Contract Price"** means the fixed LSTK price as described under Price Schedule (F – 33) payable by the Owner to the Contractor under Contract as full and final compensation and consideration for Contractors' complete proper performance of all of its obligation including completion of the Plant under and in accordance with the Contract.

1.3 "**Goods**" means all of the Equipment, machinery, and/or other materials, which the Contractor is required to supply/execute to the purchaser under the Contract.

1.4 "**Services**"" means services for design, engineering, procurement, construction, installation, commissioning, provision of technical assistance, training and other such obligations of the Contractor covered under the Contract.

1.5 "**Owner/Purchaser/ CPIIUC"** shall mean Chennnai Pharma Industrial Infrastructure Upgradation Company., a Special Purpose Vehicle (SPV) which has been selected for participating in CDP-PS for it's Cluster situated at Alathur, Kancheepuram district Tamilnadu, India.

1.6 **Deleted**

1.7 "**Contractor**" or "**Bidder"** shall mean the successful Bidder whose Bid shall be selected for award of Contract.

1.8 "**Subcontract**" shall mean Order/Contract placed by the Contractor, for any portion of the Order or Work, after necessary consent of Owner.

1.9 "**Subcontractor**" or "Sub Vendor" or "Sub Contractor"- shall mean any person or persons or firm or their legal representatives, successors, assignees to whom part of Order has been sub-let by the Contractor.

"Consortium" shall mean the Bidder and his Associate who have formed a Consortium for the purpose of executing this Project with their individual capabilities satisfying the technical and financial requirements of this Project

1.10 "**Battery Limit**" shall mean the area within which Plant/Equipment are to be located.

1.11 "**Equipment**" shall mean and include any Equipment, machinery, electrical, instruments, materials, stores, to be provided for under this Contract and amendments thereto.

1.12 "**Plant"** shall mean entire assembly of the Equipment within specified Battery Limit.

1.13 "**Drawings"** shall mean and include engineering drawings, sketches showing plants, sections and elevations related to the Contract together with modifications and/or revisions thereto.

1.14 "**Specifications**" shall mean and include schedules, detailed description, statement of technical data, performance characteristics, standards (Indian as well as international) as applicable and specified in the Contract.

1.15 "**Engineer**" shall mean the Engineer or Executive-in-charge at Site nominated by Owner.

1.16 "**Inspector**" shall mean any person or outside agency nominated or agreed by Owner to inspect Equipment stage-wise as well as final inspection, before despatch, at Contractor's work and on receipt at Site as per the terms of the Contract.

1.17 "**Tests"** shall mean such process or processes to be carried out by the Contractor as are prescribed in the Contract or considered necessary by Owner or their representatives in order to ascertain quality, workmanship, performance and efficiency of Equipment or part thereof.

1.18 "**Approval"** shall mean and include the written consent, either manuscript, type - written or printed statement, under signature or seal, as the case may be, of the Owner or their authorised representative on documents, drawings or other particulars in relation to the Contract.

1.19 **"FOR", "FOT"** & "**Ex-Works**" shall mean the terms as defined in the international rules for the interpretation of trade terms, 2010 (Incoterms) with the latest modifications incorporated.

1.20 "**Terms"** and expressions not herein defined shall have the same meaning as are assigned to them in the Indian sale of Goods Act, 1930, failing that in the Indian Contract Act (1872) and failing that in the General Clauses Act (1897) including amendments thereof, if any.

1.21 "Effective Date" means the date of issuance of Letter of Intent.

1.22 **''Completion period''** shall mean the period starting from date of issuance of LOI till the completion of guarantee test and handing over of duly commissioned Plant and facilities to Owner with the issuance of FINAL ACCEPTANCE CERTIFICATE by owner.

1.23 "**Site"** shall mean the plant location at Alathur, for which this Contract has been issued and where the Equipment shall be erected and commissioned.

2.0 SCOPE OF CONTRACT

CONTRACTOR shall be responsible for the jobs specified under following:

Lumpsum Turnkey (LSTK) execution of Conveyance system from individual units to the CETP area, the complete CETP and the distribution system of treated water through Hydro Pnuematic System back to the individual units and conveyance of the reject from R.O. plant from the Reject Water Tank to the Oxidation Pond area in the site

OF

CETP of 340 KLD (2 x 170 KLD) capacity with core process of primary electrolytic treatment, followed by secondary biological, tertiary and R.O. plant, including design, engineering, manufacture, procurement, supply to site, storing, installation, erection, testing, trial run and commissioning, establishing performance guarantee, operation and maintenance for one year from date of commissioning

OF

All mechanical, electrical, instrumentation items in the CETP, including interconnecting piping and cabling within battery limits, including complete civil construction works – water retaining structures, Pre Engineered Building (PEB) as per schedule

INCLUDING

All statutory clearances as required, from various Departments, as applicable, before, during and after the installation of the CETP

AND INCLUDING

Custom made Software for providing online data and information about the performance of the treatment plant and the parameter profiling across the treatment, through a suitable web application and mobile application program with dedicated domain and restricted access

AND INCLUDING

Complete operation and maintenance of the entire scheme – conveyance, treatment, distribution – including supply of chemicals, consumables, mechanical spares, electrical spares, instrumentation spares and other spares required for plant operations, manpower for plant operations and laboratory for analysis (for one year from date of commissioning) and replacement of media as required, and including SUPPLY of two years spares for plant operations at the time of commissioning the CETP itself.

- CONTRACTOR undertakes that GOODS shall be used exclusively for the performance/execution of the CONTRACT strictly in accordance with its terms and conditions and no part of GOODS shall be utilized for or hypothecated to any other

work or purpose whatsoever. It is clearly understood by CONTRACTOR that non-observance of the obligations under this CONTRACT by CONTRACTOR shall inter alia constitute a breach of trust on the part of CONTRACTOR for all intents and purposes including legal consequences.

- OWNER is and shall at all times remain the exclusive owner of GOODS free from all encumbrances, charges or liens of any kind, whatsoever, GOODS shall at all times be open to inspection and checking by Engineer-in- charge/Engineer or other employees/agents authorized by him in this regard. Further, OWNER shall always be free at all times take possession of GOODS in whatsoever form GOODS may be, if in its opinion, GOODS are likely to be endangered, misutilized or converted to uses other than those specified in CONTRACT by any acts or omission or commission on the part of CONTRACTOR or any other persons or on account of any reason whatsoever and CONTRACTOR binds itself and undertakes to comply with the directions of Demand of OWNER to return GOODS without any demur or reservation.

- CONTRACTOR shall erect assembly and commission PLANT for achieving guarantee performance as per TECHNICAL SPECIFICATIONS.

- CONTRACTOR shall be responsible for obtaining necessary approvals from the various statutory authorities including inspectorate of boilers in India at no extra cost to OWNER.

2.1 Scope of the Contract shall be as defined in the Contract Specifications, Drawings and Annexure and Attachments thereto.

2.2 The CONTRACTOR shall furnish **Two (2) copies** in English language of technical documents, final Drawings, preservation instructions, operation and maintenance manuals, test certificates, and spare parts catalogues. Before despatch under confirmation to the Owner, one reproducible for final Drawings & one CD shall also be furnished along with above twelve copies.

2.3 The documents once submitted by the Contractor shall be firm and final. The Contractor shall be responsible for any loss to the Owner consequent to furnishing of the incorrect data/Drawings.

2.4 All dimensions and weights should be in metric system.

2.5 All Equipment to be supplied and work to be carried out under the Contract shall conform to and comply with the provisions of relevant regulations/ acts (state Government or Central Government) as may be applicable to the type of Equipment/Work carried out and necessary certificates shall be furnished.

2.6 The Contractor shall provide cross-sectional drawings wherever applicable to identify the spare part numbers and their location. The sizes of bearings their make & number shall be furnished. Moreover material of construction, sizes of `O' rings, oil seals, packing shall also be indicated clearly.

2.7 Specifications, design and Drawings issued to the Contractor along with tender Specifications and contract are not sold or given but loaned. These remain property of Owner or their assignees and are subject to recall by Owner. The Contractor and

his employees shall not make use of the Drawings, Specifications and technical information for any purpose at any time except for execution of work against the Contract and shall not disclose the same to any person, firm or corporate authorities, without written permission of Owner. All such details shall be kept confidential.

3.0 STANDARDS

3.1 The Goods and services supplied under this Contract shall conform to the standards mentioned in the technical Specifications, or such other standards, which ensure an equal or higher quality and when no applicable standards is mentioned, the latest standards issued by an authority / recognised institution in the country of origin of the Goods shall be applicable. In case, more than one standard is indicated in the Contract, the more stringent one shall be followed.

4.0 INSTRUCTIONS, DIRECTIONS AND CORRESPONDENCE

4.1 The materials and services described in Contract are to be supplied according to the standards, data sheets, tables, Specifications and Drawings attached hereto and/or enclosed with the Contract itself and according to all conditions both general and specific enclosed with the Contract, unless any or all of them shall have been modified or cancelled in writing as a whole or in part.

i) All the work shall be carried out under the direction of and to the satisfaction of Owner.

ii) All communications including technical/commercial clarifications and/or comments shall bear reference to the Contract.

iii) Invoice for payment against Contract shall be addressed to Owner.

iv) The Contract number shall be shown on all invoices, communications, packing lists, containers and bills of lading etc.

4.2 All correspondence from Contractor shall be forwarded in duplicate (2 copies) to OWNER at following address:

Chennai Pharma Industrial Infrastructure Upgradation Company
C/o Apex Lab, 3rd Floor, SIDCO Garment Complex,
Guindy, Chennai 600 032
sethuraman_abilash@yahoo.com
contact number : 09444083286

4.3 Correspondence on technical and commercial matters shall be dealt with in separate letters for each Contract and each copy of the letter shall be complete with all Annexure.

4.4 Correspondence for expediting and inspection shall be done directly with Inspector with two copies to Owner at the address mentioned above.

5.0 CONTRACT CONFIRMATION

5.1 Within ten (10) days from date of receipt of the Contract, Contractor shall sign the Contract and return it to the Owner. The copy of the Contract shall be signed by an authorised officer of the company with company seal.

5.2 After Contract confirmation/signing, the terms and conditions contained therein take precedence over Contractor's bid conditions and all previous correspondence.

5.3 If after award of Contract, as per **Article 30.0 of Attachment-A-01,** the Contractor does not acknowledge receipt of Award of Order and/or fails to furnish the security deposit bank guarantee , as per **Article 31.0 of Attachment-A-01,** within the time period specified in the Contract, Owner reserves the right to cancel the Contract without prejudice to various rights and remedies the Owner may be entitled to as per terms and conditions of Contract and without being liable in any manner whatsoever to the Contractor.

.

6.0 MODIFICATIONS IN CONTRACT

6.1 All modifications leading to changes in the Contract with respect to technical or commercial aspects including terms of completion period shall be considered valid only when accepted in writing by Owner by issuing amendment to the Contract and also shall not affect the performance of Contract in any manner except to the extent mutually agreed to, through a modification to Contract. Owner shall have the right to modify or amend the Contract subject to an adjustment in the Contract price and/or Completion date in accordance with the applicable provision of the Contract, if any, or pursuant to mutual agreement.

6.2 Owner shall not be bound by any printed conditions, provisions in the Contractor's bid forms or acknowledgement of Contract, packing list and other documents which purport to impose any condition at variance with or supplemental to Contract.

7.0 USE OF CONTRACT DOCUMENTS AND INFORMATION

7.1 The Contractor shall not, without the Owner’s prior written consent, disclose the Contract or any provision thereof, or any specification, plan, drawing, pattern, sample or information furnished by or on behalf of the Owner in connection therewith, to any person other than a person employed by the Contractor in the performance of the Contract. Disclosure to any such employed person shall be made in confidence and shall extend only so far as may be necessary for purpose of such performance.

7.2 The Contractor shall not without the Owner’s prior written consent, make use of any document or information enumerated in Article 7.1 except for purpose of performing the Contract.

7.3 Any document other than Contract, itself, enumerated in Article 7.1 shall remain the property of the Owner and shall be returned (all copies) to the Owner on completion of the Contractor's performance under the Contract if so required by the Owner.

8.0 PATENT RIGHTS

8.1 The Contractor shall indemnify the Owner against all third party claims of infringement of patent, trademark or industrial design rights arising from use of the Goods or any part thereof in the Owner's country.

8.2 **Patent Indemnity**

Contractor shall warrant that the use or sale of the materials delivered under will not infringe claims of any patent covering such material (to the extent the design for such materials is not furnished by Owner) and Contractor agrees to be responsible for and to defend at its sole expense all suits and proceedings against Owner based on any such alleged patent infringement and to pay all costs, expenses, judgements and damages which Owner may have to pay or incur by reason of any such suit or proceedings. Notwithstanding the foregoing Owner does not warrant against and shall not be responsible for claims of patent infringement based solely on the use of such materials in combination with other materials or Equipment or in the operation of any process other than such process as may be inherent in the use of such materials.

8.3 **Mechanics Lien**

Contractor agrees to indemnify and hold harmless Owner against all labourer's material man's and/or mechanic's liens arising from its work, and shall keep the premises of Owner free from all such claims, liens and encumbrances.

8.4 **Permits and Certificates**

Contractor shall procure, at its expense, all necessary permits, certificates and licences required by virtue of all applicable laws, regulations, ordinances and other rules in force at the place where any of the works is to be performed, and Contractor further agrees to hold Owner harmless from liability or penalty which might be imposed by reason of any asserted or established violation of such laws, regulations, ordinances or other rule.

9.0 **PERFORMANCE SECURITY**

9.1 Within 30 days after receipt of Contract by Contractor, the Contractor shall furnish to the Owner security Deposit in the form of a Bank Guarantee for an amount equivalent to 10% of the value of Contract. Contractor shall inform the Owner name and address of its banker along with Fax Number and E-Mail.

9.2 The proceeds of performance security shall be appropriated by the Owner as compensation for any loss resulting from the Contractor's failure to complete its obligations under the Contract without prejudice to any of the rights or remedies the Owner may be entitled to as per terms and conditions of Contract.

9.3 The security Deposit shall be denominated in the currency of the Contract and shall be furnished in the form of bank guarantee.

9.4 The security Deposit Bank Guarantee shall be valid for the duration of the completion period and thereafter shall be extended till warranties and guarantees period (12 months from the date of final acceptance of plant or 24 months from Mechanical completion, whichever is earlier) with a claim period of 03 months. The Proforma for security Deposit bank guarantee is enclosed at F-10.

Note: EMD and Security Deposit Bank Guarantees shall be issued or counter guaranteed by any of the Nationalised/ Scheduled Indian Banks (except Cooperative and Gramin Bank)

10.0 **INSPECTION, TESTING AND EXPEDITING**

10.1 The Owner or its representatives shall have their right to inspect and/or to test the Goods to confirm to the Specifications laid down in the Contract. The special conditions of Contract and/or the technical specifications shall specify what inspections and Test the Owner require and where they are to be conducted. The Owner shall notify the Contractor in writing of the identity of any other representatives retained for this purposes. Expediting performed by Owner's representative in no way relieves the Contractor of obligation under the terms and conditions of this Contract.

10.2 The inspections and Tests may be conducted on the premises of the Contractor or his Subcontractor at point of Completion and/or at the Good's final destination. When conducted on the premises of the Contractor or his Subcontractor, all reasonable facilities and assistance including access to drawings and production data shall be furnished to the Inspector at no charge to the Owner.

10.3 Should any inspected or tested Goods fail to conform to the Specifications, the Owner may reject them and Contractor shall either replace the rejected Goods or make all alterations necessary to meet Specifications' requirements free of cost to the Owner.

10.4 Deleted

10.5 The Inspector shall follow the progress of the manufacture of the Equipment under the Contract to ensure that the requirements outlined in the Contract are not being deviated with respect to schedule and quality.

10.6 Contractor shall allow the Inspector to visit, during working hours, the workshops relevant for execution of the Contract during the entire period of Contract execution.

10.7 Deleted

10.8 Contractor shall place at the disposal of the Inspector; free of charge all tools, instruments, and other apparatus necessary for the inspection and/or testing of the Equipment. The Inspector is entitled to prohibit the use and despatch of Equipment and/or materials, which have failed to comply with the characteristics required for the Equipment during Tests and inspections.

10.9 Contractor shall ensure that the same permission is granted by his Subcontractor to the Inspector.

10.10 In respect of this inspection, Contractor shall advise in writing of any delay in the programme at the earliest possible date, describing in detail what has caused the delay and the proposed corrective action.

10.11 All Tests and trials in general, including those to be carried out for materials not manufactured by Contractor shall be witnessed by the Inspector. Therefore, Contractor shall confirm with the Owner by Email/fax about the exact date of inspection, with at least 10 days notice. Contractor shall specify the Contract item and quantities ready for testing and indicate whether a preliminary or final Test is to be carried out.

10.12 If on receipt of this notice, Owner should waive the right to witness the Test; timely information will be given accordingly to the Contractor.

10.13 Any and all expenses incurred in connection with Tests, preparation of reports and analysis made by qualified Laboratories/Institutions, necessary technical documents, testing documents, and documents, and Drawings shall be to Contractor's cost. The technical documents shall include the reference and numbers of the standards used in the construction, wherever deemed practical by the Inspector, with copy of such standards. Contractor shall be held responsible for any possible delay in the approval or testing phase as well as for any possible delay in the remittance of necessary certificates. Delay on the part of the above mentioned institutions will not be considered a case of 'Force Majeure'.

10.14 Nothing in this Article 10 shall in any way release the Contractor from any warranty or to his obligations under this Contract.

10.15 Arrangements for all inspection required by Indian Statutory Authorities and as specified in Technical specifications shall be made by Contractor.

10.16 Participation or presence of Owner or their representatives at any Tests or their failure to be present at or to witness any Tests to be undertaken pursuant hereto shall not in any way or manner relieve or release the Contractor from any of its warranties, guarantees or other obligations under the contract.

10.17 Copies of all Test results/report of the Tests shall be furnished promptly by the Contractor to the Owner.

11.0 TIME SCHEDULE AND PROGRESS REPORTING

11.1 **Time schedule network/bar chart**.

11.1.1 Together with the Contract confirmation, Contractor shall submit to Owner, his time schedule regarding the documentation, supply and manufacture of Equipment and materials as well as information of his Subcontracts to be placed with their parties, including the dates on which Contractor intends to issue such Subcontracts.

11.1.2 The time schedule will be in the form of a network or a bar chart clearly indicating all main or key events regarding documentation, supply of raw materials, manufacturing testing and Delivery, Erection & Commissioning, Guarantee test & handing over of Plant.

11.1.3 The original issue and subsequent revisions of Contractor's time schedule and or Subcontractor's time schedules shall be sent to Owner in three copies (of which one shall be reproducible).

The time schedule network/bar chart shall be updated at least every month.

11.2 Progress Trend Chart/Monthly Report

11.2.1 Contractor shall provide PERT/CPM at the start of execution and revised as and when required,

11.2.2 Contractor shall report fortnightly to Owner the progress of the execution of Contract and achievement of targets set out in time bar chart.

11.2.3 The progress will be expressed in percentages shown in the progress trend chart.

11.2.4 The first issue of the progress trend chart will be forwarded together with the time bar chart along with the Contract confirmation.

11.2.5 The fortnightly reporting will bear the updating of the progress trend chart.

11.3 **PROGRESS PERFORMANCE**

11.3.1 Owner or his representatives shall have the right to inspect Contractor's premises to evaluate the actual progress of work on the basis of Contractor's time schedule documentation.

11.3.2 Irrespective of such inspection, Contractor shall advise Owner at the earliest possible date of any anticipated delay in the programme indicating the reasons thereof and corrective measures proposed thereto.

11.3.3 In the event that the delay is caused by a delay in the Completion of sub-contracted job, Contractor shall submit details together with copies of the appropriate orders and agreements entered with such Sub-contractors

11.4 Notwithstanding the above, in case progress on the execution of Contract at various stages is not as per phased time schedule and is not satisfactory in the opinion of the Owner which shall be conclusive or if the Contractor shall neglect to execute the Contract with due diligence and expedition or shall contravene the provisions of the Contract, Owner may give notice of the same in writing to the Contractor calling upon him to make good the failure, neglect or contravention complained of. Should the Contractor fail to comply with such notice within the period of 30 days, the Owner shall have the option and at liberty to take the Contract wholly or in part out of the Contractor's risk and cost and recover from the Contractor all extra costs incurred by the Owner on this account and agreed penalty. In such an event Owner shall not be responsible for any loss that the Contractor may incur and Contractor

shall not be entitled to any gain. Owner shall, in addition have the right to confiscate performance security in full or part.

12.0 **PACKING AND PRESERVATION**

12.1 The Contractor shall provide such packing of the Goods as is sea worthy and is such as shall prevent damage or deterioration to them or any part thereof during transit to their final destination as indicated in the Contract. The packing shall be sufficient to withstand without limitation to rough handling during transit and exposure to extreme temperatures, salt and precipitation during transit and open storage. Packing case size and weights shall be taken into consideration, where appropriate, the remoteness of the Goods' final destination and the absence of heavy handling facilities at all points in transit.

12.2 The packing, marking and documentation within and outside the packages, shall comply strictly with such special requirements as shall be expressly provided for in the Contract and subject to any subsequent instructions issued by the Owner.

12.3 Contractor shall be obliged to make compensation for all losses suffered by Owner due to Contractor's improper packing of Equipment.

i) Spares shall be packed separately and identification marks tagged to each of the items, containing the following information and as per instructions specified in the Contract:

a) Details of Equipment and Contract
b) Nomenclature of part/component
c) Part No. and Drawing No.
d) S. No. of part in Contract.
e) S. No. of part in spares catalogue.

ii) All fragile and all exposed parts shall be packed with due care and packages shall bear the words "Handle with Care" in English.

iii) All holes and openings as also all the machined surfaces shall be carefully protected against weather and damages.

v) All manufactured surfaces shall be painted with rust proof paint.

vi) All threaded fittings shall be greased and provided with plastic caps.

12.4 Contractor is fully responsible for specification of the storage conditions for his Equipment and materials, and Contractor is also responsible for any damage incurred due to faulty or missing instructions.

12.5 At least 10 (ten) days prior to final inspection, Contractor shall submit to Owner a complete description of the packing.

12.6 The Contractor shall be liable for all damages or breakage to the Equipment due to the defective or insufficient packing as well as for corrosion due to insufficient

protection. In such an event Contractor shall arrange for free replacement without any cost to Owner.

12.7 In each package Contractor will ensure that there is a packing list in English language. The storage classification shall be agreed with Owner and indicated in the conditions of Contract. A separate packing list in polythene/cellophane cover shall be affixed on to outside of each package.

12.8 Contractor / Supplier shall ensure compliance regarding treatment and marking of the packing material as per ISPN-15 and other related requirements of Government of India. Wherever required supplier / contractor shall ensure necessary phyto-sanitary certificate for this are made available to custom authority at the time of custom clearance.

13.0 COMPLETION AND DOCUMENTS

13.1 Completion time shall include time for submission of Drawings for approval, incorporation of comments, if any, and final approval of Drawings by Owner.

Drawings and documentation submitted by the Contractor for approval shall be taken up by the Owner / his representative and the suitable confirmation / clarification should be issued within 15 working days from the date of submission of the said drawings and documentation. In case the Owner / his representative delays beyond 15 days, at the discretion of the Owner, sufficient extra time will be provided to the Contractor to compensate for the same.

13.2 In the event of delay in execution, Contractor shall cause Price Reduction as stipulated in the Article 23.

13.3 In case of delayed Completion beyond the stipulated Completion by Contractor even though normal extension of completion time is allowed by Owner, all extra costs on account of changes of statutory regulations/ acts, or increase in price on any other account including price variation clause, if any, shall not apply to the Contract price and shall be borne by the Contractor.

13.4 Special care shall be taken by the Contractor to furnish manufacturer's test certificates, material of constructions, make, type pressure ratings, wherever applicable, included in the scope of supply of Equipment, before its shipment to enable Owner to obtain permission for import from directorate of explosive or any concerned Statutory Authority in India.

13.5 Deleted

14.0 INSURANCE

CONTRACTOR shall take in the joint name of CONTRACTOR and OWNER comprehensive transit insurance for imported and indigenous goods Transit-cum-Storage-Erection or its equivalents and third party liability insurance policies with reputed underwriters to cover ALL RISK whatsoever during the whole period starting with dispatch of GOODS from BIDDER/CONTRACTOR's warehouses and including

transportation, loading, unloading, assembly, erection, testing COMMISSIONING OF PLANT till FINAL COMPLETION.

CONTRACTOR shall be fully responsible for pursuing and setting all claims under the underwriters. In the event of accident, injury, damage or loss likely to form a claim under the above insurance policies, CONTRACTOR shall as quickly as possibly submit the insurance claims by underwriters under intimation to OWNER CONTRACTOR shall also keep OWNER fully informed about progress of each such case. CONTRACTOR shall undertake immediate repair and replacement of the equipment lost in transit, storage, assembly, erection and COMMISSIONING of PLANT pending settlement of claim thereafter by the underwriters.

14.1 The Contractor at his cost shall arrange, secure and maintain all insurance as may be pertinent to the works and obligatory in terms of law to protect his interest and interest of Owner, against all perils detailed herein. The Form and the limit of such insurance as defined herein together with the under-writer in each case shall be acceptable to the Owner. However, irrespective of such acceptance, the responsibility to maintain adequate insurance coverage at all times including third party liability during the period of contract shall be as of Contractor alone. The contractor's failure in this regard shall not relieve him of any of his contractual responsibilities and obligations. The insurance covers to be taken by the contractor shall be in the joint names of Owner and the Contractor. The Contractor shall, however, be authorised to deal directly with insurance company or companies and shall be responsible in regard to maintenance of all insurance covers.

14.2 All insurance is to be covered from insurance company registered in India. There should be a single cover for inland transit, storage and erection upto ACCEPTANCE OF PLANT. The insurance premium is reimbursable subject to maximum of the quoted amount under this head. All insurance covers shall be taken by CONTRACTOR in joint name of CONTRACTOR and OWNER.

14.3 Any loss or damage to the equipment during handling, transportation, storage, erection, putting the equipment into satisfactory operation and all activities to be performed till the successful completion of trial operation of the plant shall be to the account of the contractor. The contractor shall be responsible for reference of all claims and make good the damages or loss by way of repairs and/or replacement of the equipment, damaged or lost.

The transfer of title shall not in any way relieve the contractor of the above responsibility during the period of contract. The contractor shall provide the Owner with copies of all insurance policies and documents taken out by him in pursuance of the contract. Such copies of documents shall be submitted to the Owner immediately after such insurance coverage. The contractor shall also inform the Owner in the writing at least sixty (60) days in advance regarding the expiry/cancellation and/or change in any of such documents and ensure revalidation, renewal etc. as may be necessary well in time.

14.4 Deleted

14.5 All cost on account of insurance liabilities covered under the contract will be to the contractors account and will be included in the contract price. The contractor, while

arranging the insurance, shall ensure to obtain all discounts on premia, which may be available for higher volume or for reason of financing arrangement of the project.

15.0 DESPATCH, TRANSPORTATION / SHIPPING INSTRUCTIONS

15.1 CONTRACTOR shall arrange for dispatch of GOODS by sea / rail / road / air after proper packing and protection as per instructions given in this CONTRACT.

15.2 As to GOODS purchased in India title to and property in GOODS shall pass to OWNER, supplier shops notwithstanding the transfer of the title to and property in GOODS to OWNER CONTRACTOR shall carry out all obligations in regard thereto as stipulated in CONTRACT.

15.3 The care and custody responsibility of CONTRACTOR shall terminate upon FINAL COMPLETION and handing over of duly commissioned Plant to Owner.

Assembly Marks and Name Plates:

15.4.1 All components / parts of GOODS when dispatched in unassembled status shall be adequately visible, indelibly hard marked with identification mark comprising equipment / part numbers and CONTRACT under which shall be shown on drawing to facilitate speedy identification, assembling or dismantling.

.

15.4.2 Name Plates

On each equipment, a nameplate indicating basic details, pressure rating, wherever applicable, code number of equipment, electrical characteristics in case of electrical equipment, name of instrument with tag no., manufacturer's name shall be fixed at proper place.

15.5 All inland transportation shall be governed by applicable Indian Laws.

16.0 INCIDENTAL SERVICES

16.1 As specified in the special conditions of Contract, the Contractor may be required to provide any or all of the following services:

i) Performance or supervision or maintenance and/or repair of the supplied Goods, for a period of time agreed by the parties, provided that this service shall not relieve the Contractor of any warranty obligations under this Contract, and

ii) Conduct training of the Owner's personnel, at the Contractor's plant and/or on Site, in assembly, start-up operation, maintenance and/or repair of the supplied Goods.

16.2 At the request of Owner, Contractor shall at his expense, dismiss from work and replace any such employee as Owner, may deem incompetent or careless or whose continued employment is deemed inimical to the interest of the Owner or against public interest.

16.3 Other conditions of work at Site shall be as per site working & safety condition enclosed with NIT.

17.0 SPARE PARTS, MAINTENANCE TOOLS AND LUBRICANTS

17.1 As specified in the Contract, the Contractor may be required to provide any or all of the following materials and notifications pertaining to spare parts manufactured or distributed by the Contractor.

i) Such spare parts as the Owner may opt to purchase from the Contractor, provided that this option shall not relieve the Contractor of any warranty obligations under the Contract, and

ii) All the spares for the Equipment under the contract will strictly conform to the specification and other relevant documents and will be identical to the corresponding main Equipment/ components supplied under the Contract and shall be fully interchangeable.

iii) The Contractor will provide the Owner with all the addresses and particulars of his Sub-Contractors/Sub Contractors while placing the order on vendors for items/components/ Equipment covered under the Contract and will further ensure with his vendors that the Owner, if so desires, will have the right to place order for spares directly on them on mutually agreed terms based on offers of such vendors.

iv) The Contractor shall guarantee the long term availability of spares to the Owner for the full life of the Equipment covered under the Contract. The Contractor shall guarantee that before going out of production of spare parts of the Equipment covered under the Contract, he shall give the Owner at least 2 years advance notice so that the later may order his bulk requirement of spares, if he so desires. The same provision will also be applicable to Subcontractors. Further, in case of discontinuance of manufacture of any spares by the Contractor and/or his Subcontractors, Contractor will provide the Owner, two years in advance, with full manufacturing Drawings, material Specifications and technical information including information on alternative equivalent makes required by the Owner for the purpose of manufacture/ procurement of such items.

17.2 Contractor shall complete item-wise list with value of each item of spare parts and maintenance tools requirements for two years' operation and maintenance period.

17.3 Spare parts shall be new and of first class quality as per engineering standards/codes, free of any defects (patent or latent), deficiency in design, materials and workmanship and also shall be completely interchangeable with the corresponding parts.

17.4 Type, No. and sizes of bearings shall be indicated. Size & material of construction of `O' rings, oil seals, packing shall also indicated.

17.5 Spare parts shall be packed for long storage under tropical and coastal climatic conditions in suitable cases, clearly marked for the intended purpose.

17.6 A list of special tools and gauges required for normal maintenance and special handling and lifting appliance if any, for the Equipment shall be submitted to Owner.

17.7 Whenever lubricants are required, Contractor shall indicate the quantity of lubricants required for the first filling, the frequency of changing, the quantity of lubricants required for 1 year's continuous operation and the types of recommended lubricants indicating the commercial name (trade mark), quality and grade.

17.8 If Contractor is unable to recommend a specific oil, basic recommended characteristics of the lubricants may be indicated.

17.9 Contractor shall indicate various equivalents of lubricants available in India.

18.0 WARRANTIES AND GUARANTEES

18.1 Materials and Workmanship Warranty

18.1.1 The Contractor shall fully warrant that the Goods supplied under the Contract are new, unused; of the most recent or current models and incorporate all recent improvements in design and materials unless provided otherwise in the Contract. The Contractor shall further warrant that all Goods supplied under this Contract shall be of first class quality according to Specifications, have no defect (patent or latent) arising from design, materials or workmanship or from any act of omission of the Contractor that may develop under normal use of the supplied Goods in the condition prevailing in the country of final destination.

18.1.2 This warranty shall be valid for 24 months from Mechanical Completion or 12 months from final acceptance whichever is earlier. Should any defects be noticed in the design, materials and/or workmanship within 24 months from the date of Mechanical Completion or 12 months from the date of final acceptance of plant, whichever is earlier, Owner shall inform Contractor and Contractor shall immediately on receipt of such intimation depute their personnel within 7 days to investigate the causes of defect and arrange rectification/ replacement/ modification of the defective Equipment at Site without any cost to Owner within a reasonable period. Owner shall be free to take such corrective action as may be deemed necessary at Contractor's risk and cost, after giving notice to the Contractor. The Owner shall promptly notify the Contractor in writing of any claim arising under this warranty.

18.1.3 Damage to the machinery and/or Equipment deriving from incomplete and erroneous instructions issued by Contractor will be considered Contractor's fault and will be treated according to the provisions of this warranty clause.

18.1.4 In case defects are of such nature that Equipment shall have to be taken to Contractor's works for rectification etc., the Contractor shall take the Equipment at his cost after giving necessary undertaking or security as may be required by the Owner. Owner shall, if so required by the Contractor, despatch the Equipment by quickest mode on freight to pay basis to the Contractor's works. After repairs Contractor shall deliver the Equipment at Site on freight paid basis. All risks in transit to and fro shall be borne by the Contractor.

18.1.5 Equipment or part thereof so repaired or replaced shall have further warranty for a period of 12 months from the date of acceptance.

18.1.6 If the repairs, replacements or modifications referred to, are of such nature as may affect the efficiency of the Equipment, Owner/ shall have the right to give to the Contractor within one month of such replacement/renewal, notice in writing to carryout tests as may be required for acceptance of the Equipment.

18.1.7 If the Contractor fails to meet his obligation to repair or replace defective Goods within a reasonable period of time, if Contractor refuses to carry out work under the guarantee clause and implied guarantee conditions, if danger is anticipated or in case of severe urgency Owner shall be entitled to carry out at Contractor's cost and risk, repair work or replacement deliveries or have it done by a third party. In case not all Goods have been delivered by Contractor, Owner is entitled to procure the

remaining Goods at Contractor‘s cost and risk. This does not relieve Contractor of any of his guarantee, obligations. Taxes and duties of any kind, whatsoever imposed by the authorities of the country of Contractor or his Subcontractors until Completion shall be borne by Contractor.

18.1.8 Damages to EQUIPMENT deriving from incomplete, erroneous instructions issued by CONTRACTOR will be considered CONTRACTOR’s fault and will be treated according to the provision of warranty clause.

18.1.9 The warranty shall cover manufacturing defects and workmanship and will not cover normal wear and tear and consumables and damage due to process condition changes.

18.2 **Performance Guarantee**

18.2.1 Contractor shall guarantee that the performance of the plant under the Contract shall be strictly in conformity with the Technical Scope as enclosed in the ITB documents and shall perform the duties specified under the Contract.

18.2.2 If the performance of the Plant fails to prove the guarantee set forth in the Specifications, Contractor shall investigate the causes and provide free of cost to Owner design, Engineering, materials, and services and Equipment within a reasonable period to prove guarantees. The Contractor's liability for reviewing the defect as well as making good any shortcoming shall be unlimited. The Contractor shall be liable for reviewing the defect as well as making good any shortcoming as set forth in Performance Guarantee parameters as detailed in Technical specification..

18.2.3 If the supplier / contractor fails to prove the guarantee within the period stipulated in the contract, the owner shall have the option to takeover the equipment and rectify the same, if possible to fulfil the guarantees and / or to make necessary additions to make up the deficiency at supplier’s / contractor risk and cost. All expenditure incurred by the Owner in this regard shall be on Supplier’s / Contractors account.

19.0 **ASSIGNMENT**

The Contractor shall not assign in whole or in part, its obligations to perform under this Contract, except with the Owner's prior written consent.

20.0 **SUBCONTRACT AND PURCHASE ORDERS**

20.1 **General**

All vendors, suppliers, consultants and SUB-CONTRACTORS providing equipment, materials, construction equipment, or services to CONTRACTOR under a SUBCONTRACT, purchase order or similar purchase form or arrangement with CONTRACTOR for the performance of the WORK under this CONTRACT are herein referred as 'SUB-CONTRACTOR and any such SUBCONTRACTS, purchase orders and similar purchase forms and arrangement entered into by or on behalf of CONTRACTOR with SUB CONTRACTORS / VENDORS are herein referred to as 'SUBCONTRACTS' provided that none of OWNER'S CONTRACTORS or SUBCONTRACTORS shall be deemed to be a SUBCONTRACTORS under of the CONTRACTOR. The CONTRACTOR shall be obligated to select SUBCONTRACTORS it retains in connection with the performance by CONTRACTOR of the WORK from a SUBCONTRACTORS list which would be finalised and approved by OWNER in the FINAL PROPOSAL OWNER and CONTRACTOR may be mutual agreement add to or delete from such list from time to time and approve any successor or replacement of any person listed on such list or any other vendor, supplier, material-man, consultants or SUBCONTRACTOR.

20.2 **Approval of Major SUB-CONTRACTOR / VENDOR**

20.2.1 The vendor list for procurement of EQUIPMENT and the list of SUB-CONTRACTOR shall be as attached to FINAL PROPOSAL. Any changes to such list of VENDOR / SUB-CONTRACTOR shall require the prior approval of OWNER. CONTRACTOR shall provide name, address, fax / telex number and the name of contact person of major VENDOR /SUB-CONTRACTOR for use in future, to OWNER.

20.2.2 The review, approval and consent by OWNER as to the agreed SUB-CONTRACTOR's / VENDOR List or as to CONTRACTOR's entering into any SUBCONTRACT / PURCHASE ORDER shall not relieve CONTRACTOR of any of its duties, liabilities or obligations under this CONTRACT and CONTRACTOR shall be liable hereunder to the same extent as if any such Subcontract had not been entered into

20.2.3 a) CONTRACTOR shall provide to OWNER such information concerning the SUBCONTRACTORS as OWNER may from time to time reasonably request and shall ensure that each SUBCONTRACT contains provisions in all material respects not less stringent than the provisions of the CONTRACT and shall include terms and provisions required to be included pursuant to the CONTRACT. In the event of termination of the CONTRACT under-Section 21 herein, CONTRACTOR shall forthwith deliver to OWNER a copy of each SUBCONTRACT.

b) CONTRACTOR shall supervise and direct the work of all SUBCONTRACTORS / VENDORS and shall be responsible for all design; engineering; procurement; manufacturing; transportation; delivery; fabrication; construction; commissioning; start-up and testing means, erections; operation, maintenance, repairs; methods; techniques; sequence and procedures of ; and for co-coordinating the work of SUBCONTRACTORS / VENDORS.

c) If CONTRACTOR fails to correct, or commence to correct and prosecute the correction with due diligence of deficient or defective work performed by any SUBCONTRACTOR / VENDOR within seven days, after receipt by

CONTRACTOR of a notice from OWNER with respect thereto, OWNER may (but shall not be obligated to), after seven days following receipt by CONTRACTOR of an additional notice, and without prejudice to any other right or remedy take all reasonable steps to remedy such defective or deficient work at risk and cost of CONTRACTOR.

d) CONTRACTOR shall require all SUBCONTRACTORS / VENDORS to perform the SUBCONTRACTS in accordance with the relevant requirements of the CONTRACT including FINAL PROPOSAL, all Applicable Laws and Applicable Permits, Prudent Utility, Practice, Good Engineering Practices, the requirements of the ITB, and all Warranties of SUBCONTRACTORS /VENDORS and Manufacturers and all insurance policies relating to the PLANT or the WORK.

e) CONTRACTOR shall be solely responsible for paying each SUBCONTRACTOR / VENDOR and any other agencies working for CONTRACTOR.

20.4 Sub-contract shall incorporate technical conditions and inspection requirements stipulated in Contract and any amendments and changes thereto.

20.5 Copies of Subcontract shall also be forwarded to Owner/Inspector.

20.6 If Subcontractor should appear unfit to carry out his part of the Contract work or the progress of Subcontractor's work is such that the planned time of completion within the terms of Contract is jeopardised, Owner has the right to instruct Contractor, in writing, to terminate the Subcontract at a short notice.

20.7 Sub-contract must comply with the provisions with respect to eligible Goods and services indicated in the bidding documents.

21.0 JOINT AND SEVERAL RESPONSIBILITIES

When the supply is a part of group including parts supplied by others, Owner shall hold Contractor and responsible for the perfect operation of the group.

22.0 **DELAYS IN THE CONTRACTOR'S PERFORMANCE**

22.1 Completion of the Plant and performance of services shall be made by the Contractor in accordance with the time schedule specified by the Owner in the Contract.

22.2 An unexcused delay by the Contractor in the performance of its Completion obligations shall render the Contractor liable to any or all of the following sanctions: imposition of price reduction , Forfeiture of its security deposit and/or termination of the Contract for default.

22.3 Extension in Completion terms of Contract, if any, shall be at the sole discretion of the Owner.

23.0 **PRICE REDUCTION CLAUSE**

23.1 If for reasons not attributable to the Owner or due to conditions constituting Force Majeure as defined in this Contract, the Work is not completed in accordance with the provisions hereof, within and in accordance with the Time Schedule/ time for Completion as indicated in the terms and conditions of the Contract, it is agreed that the Owner shall be entitled to recover and/or the Contractor shall pay to the Owner, without prejudice to any other right are remedy available to the Owner, the following amount as mutually agreed compensation;

23.1.1 A sum equivalent to 0.5% of the pending value of the Contract price for every complete week or part thereof, for delay in completion and handing over the Plant to the Owner by the Contractor, subject to a maximum 5% of the pending value of the contract Price inclusive of escalation and contingencies, if any;

23.2 The amounts, as set in clause 23.1 is agreed upon and fixed by the parties due to difficulties in ascertaining, on the date hereof, the exact amount that will be actually incurred by the Owner in such event, and parties hereby agreed that amount specified herein are a genuine pre-estimate made by the parties of the loss and damage which the Owner would have suffered and as by way of mutually determined reasonable compensation payable to the Owner and without the Owner required to establish and prove the actual loss/ damage suffered by the Owner, not in the nature of penalty and shall be applicable regardless of the amount of such deduction in value actually sustained by the Owner.

23.3 The parties agree and acknowledge that the amount set of in clause 23.1 above may be recovered by the Owner from the amount to be paid to the Contractor and the Contract Price shall stand reduced by such amount.

23.4 **For Failing to Meet Works Cost Guarantee.**

Contractor shall guarantee overall consumption of utilities like power for, operation of CETP .

In the event works cost is more than 100% and upto 105% of the Guaranteed Works Cost then the contractor will pay Owner mutually agreed compensation as specified hereunder.

For every 1.0% increase in Works cost above the guaranteed works cost or part thereof, contractor will pay mutually agreed compensation equal to 1.0% of the CONTRACT PRICE.

If the Works cost as demonstrated during the performance test is more than 105% of the Guaranteed Works Cost then it shall be breach of contract requiring corrective action by contractor irrespective of the cost involved.

23.5 The maximum overall liability under the CONTRACT shall be limited to 10% of CONTRACT price, excluding liabilities for extra cost incurred due to Termination of CONTRACT and carrying out balance work at the risk and cost of the CONTRACTOR, re-engineering, make good, mechanical warranty and patent infringement as per relevant Clauses of CONTRACT.

23.6 (A) If the performance of the Plant fails to prove the guarantee set forth in the Specifications, Contractor shall investigate the causes and provide free of cost to Owner design, Engineering, materials, and services and Equipment within a reasonable period to prove guarantees.

(B)The Contractor's liability for reviewing the defect as well as making good any shortcoming shall be unlimited. The Contractor shall be liable for reviewing the defect as well as making good any shortcoming as set forth in Performance Guarantee parameters as detailed in Technical specification.

23.7 Deleted

24.0 REJECTIONS, REMOVAL OF REJECTED EQUIPMENT AND REPLACEMENT

24.1 Preliminary inspection at CONTRACTOR's manufacturer's works by INSPECTOR shall not prejudice OWNER's claim for rejection of the item of GOODS on final inspection at SITE or claims under warranty provisions of Article-16

24.2 If GOODS are not to its specification or fail to perform specified duties or otherwise are not satisfactory, all as set out in TECHNICAL SPECIFICATIONS, OWNER shall be entitled to reject GOODS or part thereof and ask for free replacement within reasonable time failing which OWNER shall obtain his requirements from any other source at CONTRACTOR's cost and risk.

24.3 In the event of such rejection OWNER shall be entitled to the use of GOODS in a reasonable and proper manner for the time reasonably sufficient to enable him to obtain replacement.

24.4 Nothing in this Article shall be deemed to deprive OWNER and/or effect any rights under CONTRACT of OWNER which he may otherwise have in respect of such defects or deficiencies or in any way relieve CONTRACTOR of his obligations under this CONTRACT.

24.5 GOODS rejected by OWNER shall be removed by CONTRACTOR at his cost within 15 days of notice and the equivalent amount will be deducted from the next payment due to the Contractor. after repaying the amount received against the supply or by proving a Bank Guarantee of Equivalent amount for period of replacement.

The value and validity period of BG shall be assessed by Owner at the time of replacement. However this should not affect overall project schedule.

24.6 In case of rejection of GOODS, OWNER shall have the right to recover the amount paid, if any, from any of CONTRACTOR's invoice pending with OWNER under this CONTRACT or by alternative method.

25.0 TERMINATION OF CONTRACT

25.1 Termination for Default

25.1.1 The Owner may without prejudice to any other remedy for breach of Contract terms & conditions, by written notice of default send to the Contractor, terminate/cancel the Contract in whole or in part:

a) If the Contractor fails to complete any or all of the jobs within the time period(s) specified in the Contract, or

b) If the Contractor fails to perform any other obligation(s) under the Contract,

c) If the Contractor, in either of the above circumstances does not rectify his failure within a period of 30 days (or such longer period as the Owner may authorise in writing) after receipt of the default notice from the Owner.

25.1.2 In the event the Owner terminates the Contract in whole or in part, pursuant to clause 25.1 the Owner may procure, upon such terms and in such manner as it deems appropriate Goods similar to those undelivered and the Contractor shall be liable to the Owner for any excess costs for such similar Goods subject to limit of 30% of the contract value. However, the Contractor shall continue performance of the Contract to the extent not terminated..

25.1.3 In the event of termination of contract, Security Deposit BG shall be forfeited.

25.2 Termination for Insolvency

The Owner may at any time terminate the Contract by giving written notice to the Contractor, without compensation to the Contractor, if the Contractor becomes bankrupt or otherwise insolvent, provided that such termination will not prejudice or affect any right of action or remedy which has occurred or will occur thereafter to the Owner.

25.3 Termination of Convenience

25.3.1 The Owner may, by written notice send to the Contractor, terminate the Contract, in whole or in part, at any time for his convenience. The notice of termination shall specify that termination is for the Owner's convenience, the extent to which performance of work under the Contract is terminated and the date upon which such termination becomes effective.

25.3.2 The jobs that are complete and ready for handover within 30 days after the Contractor's receipt of notice of termination shall be accepted by Owner at the Contract terms and Prices. For the remaining jobs, the Owner may opt:

-To have any portion completed and delivered at the Contract terms and Prices; and/or

-To cancel the remainder and pay to the Contractor an agreed amount for partially completed Goods, materials, services and parts previously procured by the Contractor, in which event such Goods shall be the property of the Owner.

26.0 **FORCE MAJEURE**

26.1 Neither the Contractor nor the Owner shall be considered in default in the performance of their contractual obligations under the Contract, as long as such performance is prevented or delayed for reasons, by such act of God, as severe earthquake, typhoon or cyclone ,monsoon, floods, lightning, landslide, fire or explosions, plague or epidemics, strike of a whole national category of workers and concerted act of workmen or other industrial disturbances (lasting more than 14 consecutive calendar days), lockouts, sabotage, blockade, war, riots, invasion, act of foreign enemies, hostilities (whether war be declared or not), civil war, rebellion, revolution, insurrection or confiscation of power by military or trade embargoes of destruction or requisition by order of any government or any Public Authority.

Contractor shall within one (1) week of occurrence of such conditions notify Owner about the occurrence of the force majeure event and provide Owner details of the arising and ceasing of the impediment. The time for performance of the respective obligations suspended by the force majeure shall stand extended by the period(s) for which such conditions of force majeure last. Contractor shall provide justification by documentation countersigned by the local chamber of commerce.

26.2 Should one or both the parties be prevented from fulfilling the contractual obligations by a state of force majeure lasting continuously for a period of six (6) weeks, the two parties shall consult each other regarding the future execution of the Contract.

The mere shortage of labour, materials or utilities like electric power etc. shall not constitute force majeure unless caused by circumstances which are themselves force majeure. If, due to force majeure delay caused exceeds more than three (3) months, Owner shall have the right to cancel the Contract at no charge to Owner in Contractor's favour and Owner shall be entitled to the reimbursement of any amount already paid to Contractor.

26.3 Contractor shall endeavour to prevent, overcome or remove the cause of force majeure.

26.4 No ground for exemption can be invoked if Contractor has failed to give timely notice supported by documentary evidence.

27.0 **RESOLUTION OF DISPUTES/ARBITRATION**

27.1 The Owner and the Contractor shall make every effort to resolve amicably by direct informal negotiations any disagreement or dispute arising between them under or in connection with the Contract.

27.2 If, after thirty (30) days from the commencement of such informal negotiations, the Owner and the Contractor have been unable to resolve amicably a Contract dispute,

either party may require that the dispute, be referred for resolution to the formal mechanisms as specified hereunder.

27.3 **LEGAL CONSTRUCTION**

Subject to provision of Article 27.4, the Contract shall be, in all respects, construed and operated as an Indian contract and in accordance with Indian laws as in force for the time being and is subject to the exclusive jurisdiction of the **Courts of Chennai only**

27.4 **ARBITRATION**

27.4.1 "Except where otherwise provided in the contract all matters, questions, disputes or differences whatsoever, which shall at any time arise between the parties hereto, touching the construction, meaning, operation or effect of the contract, or out of the matters relating to the contract or breach thereof, or the respective rights or liabilities of the parties, whether during or after completion of works or whether before or after termination shall after written notice by either party to the contract be referred to the arbitration of Secretary, Department of Pharmaceuticals, Ministry of Chemical & Fertilizers, Government of India or his/her nominee.

The Arbitration & Conciliation Act, 1996 or any statutory modification or re-enactment thereof and the rules made there under shall govern the Arbitration proceedings.

The contractor hereby agrees that he shall have no objection if the arbitrator so appointed is in employee of CPIIUC he had to deal with the matter to which the contract relates and that in the course of his duties as such he has expressed his views on all or any of the matter in dispute or differences.

If the arbitrator to whom matter is referred, vacates his/her office by any reason whatsoever then the next arbitrator so appointed by the authority referred above may start the proceedings from where his predecessor left or at any such stage he may deem fit".

"It is agreed by and between the parties that in case a reference is made to the Arbitrator or the Arbitral Tribunal for the purpose of resolving the disputes/differences arising out of the contract by and between the parties hereto, the Arbitrator or the Arbitral Tribunal shall not award interest on the awarded amount more than the rate SBI Base Rate as applicable to Owner on the date of award of contract.

28.0 **GOVERNING LANGUAGE**

28.1 The Contract shall be written in English language as specified by the Owner in the instructions to bidders. All literature, correspondence and other documents pertaining to the Contract, which are exchanged by the parties, shall be written in English language. Printed literature in any other language shall only be considered, if it is accompanied by English translation. For purpose of interpretation, English translation shall govern and be binding on all parties.

29.0 **NOTICES**

29.1 Any notice given by one party to the other, pursuant to this Contract shall be sent in writing or fax/ email and confirmed by hard copy in writing to the address specified for that purpose in the special conditions of Contract.

29.2.1 A notice shall be effective when delivered or on the Effective Date, notified in such notice, whichever is later.

30.0 TAXES AND DUTIES

30.1 The Bidder must ensure that the applicable taxes, duties, are included in CONTRACT PRICE and the rates has been indicated in the Price Bid as per given format.

30.2 The CONTRACTOR confirms that it has included all taxes, duties, levies, etc.,as applicable at prevailing rates, in its CONTRACT PRICE. In case, CONTRACTOR has not included any such taxes, duties, levies, etc., at all and / or at prevailing rates and CONTRACTOR has to pay such taxes, duties, levies, etc., OWNER shall not be liable for payment of such liabilities and / or OWNER shall not reimburse such taxes, duties, levies, etc. to CONTRACTOR.

30.3 Any statutory variation in percentage of taxes, duties as shown under Article-30.1 shall be reimbursed by OWNER **after confirmation from Department of Pharmaceuticals** to CONTRACTOR or vice-versa on submission of documentary evidence. No variation in statutory levies shown under article 30.1 including the custom duty shall be allowed on inputs for indigenous vendors. However, in case of delay in ACCEPTANCE OF PLANT due to reasons attributable to CONTRACTOR, any increase in percentage of taxes / duties over and above those specified under Article-30.1 during the delayed period shall be to Contractor's account and shall not be reimbursed by OWNER, however, any decrease in taxes and duties during the delayed period shall be passed on to the Owner.

30.4 The payment of all taxes is the responsibility of CONTRACTOR. OWNER, however, shall provide all assistance to CONTRACTOR in connection with the same. Any amount which OWNER may be required by law to deduct at source towards income tax shall be deducted by OWNER out of the amount payable to CONTRACTOR and the balance amount shall be paid by OWNER to CONTRACTOR.

For the purpose, OWNER shall obtain the necessary certificate as per prevalent provisions of the Income Tax Act on the basis of such information and documentation as supplied by CONTRACTOR. OWNER shall, however, provide CONTRACTOR the certificate and challans evidencing the payment of such deducted amount. OWNER shall assist and cooperate with CONTRACTOR for obtaining Indian personal tax exemption for the personnel deputed to India for and in connection with this CONTRACT.

Any other taxes / duties in relation to this contract which the Owner is required to deposit as per the applicable law shall be paid by Owner and recover from the Contractor from any subsequent payment due to the Contractor.

30.5 **INCOME TAX**

a) CONTRACT PRICE shall be inclusive of any and all Indian Income Tax payable in India. OWNER shall deduct Indian Income Tax as per IT Act 1962, from the payments due to CONTRACTOR and issue tax deducted at source certificate to CONTRACTOR. It is the responsibility of the CONTRACTOR to file proper income tax return and pay taxes thereon if any, or claim refund thereof if any. The CONTRACTOR shall give Owner all necessary documents relating to its income tax assessments and to keep the Owner informed about their assessments.

b) Personal income tax payable, if any, in respect of salary and perquisites of CONTRACTOR's personnel in India shall be payable by the individual so deputed by CONTRACTOR or CONTRACTOR. It is the responsibility of the individual or CONTRACTOR to file proper income tax return and pay taxes thereon if any, or claim refund thereof if any. The CONTRACTOR shall give Owner all necessary documents relating to income tax assessments of its personnel and to keep the Owner informed about their assessments.

c) On the basis of original tax certificates to be furnished to CONTRACTOR by OWNER as referred in this Article. CONTRACTOR shall seek in its country Income Tax rebate if applicable by utilizing the Indian Income Tax paid under this CONTRACT and shall, when such benefit is finally obtained, pass such rebate to OWNER. CONTRACTOR shall use its best efforts short of litigation to obtain any such rates, which maybe available under its Country Laws for Income Tax paid in India under this CONTRACT.

d) Contractor shall make available every year for the period ending 31ST December to OWNER certified statement from CONTRACTOR's dependent auditors in their country indicating the amount of rebate claimed and/or obtained by CONTRACTOR as on 31st December in their country against Income Tax paid in India in connection with this CONTRACT with in 60 DAYS.

e) CONTRACTOR shall submit to OWNER an undertaking to refund any credit towards Income Tax if it accrues to it at a future date in its country under the provisions of the Double Taxation Treaty, if any, between the Govt. of India and the Govt. of CONTRACTOR's country. OWNER, on its part will extend all necessary documents to enable CONTRACTOR to obtain tax benefits / refunds in its country as well as in India. CONTRACTOR shall arrange submission of certified statements of all tax assessments every year until all tax assessments relating to WORK under CONTRACT are finalised in CONTRACTOR's country or the resulting tax credits have been finally determined, whichever is later. CONTRACTOR shall also submit to OWNER a certificate every year till the final exhaustion of such tax credits about the quantum thereof available to it.

31.0 INSTRUCTION FOR INVOICING AND PAYMENT DOCUMENTATION

31.1 Invoicing

Invoicing shall be in compliance with the stipulations of the Contract and the following instructions. Contractor is liable as for all costs arising from non-compliance with the instructions.

As far as possible, description of Goods/Jobs done in invoice and despatch documents shall match the description in Contract.

The invoices shall be issued in the name of:

Chennai Pharma Industrial Infrastructure Upgradation Company
Alathur

The invoice shall contain the following information:

i) Contract No.
ii) Item no., quantity and complete description
iii) Item-wise net price (unit and total) of the Equipment / Services when applicable.
iv) Net amount payable by deducting advance payment already invoiced, if any, and the guarantee retention amount, if any, from the total value of the Equipment / Services being invoiced.
v) Statement that the Equipment / Services are meant for **CPIIUC, Alathur , CETP.**
vi) Statement that if there is any exemption applicable against certain specified duties and taxes along with supporting documentary evidence.
vii) Delivery challan No /B/L/LR NO

The duly signed invoices, original and copy shall be made on Contractor's letterhead and shall be submitted along with the relevant documents mentioned above.
Any other document specified in terms of Contract.

31.2 **Payment Documentation**

The following documents shall be presented by Contractor to Owners' bankers to draw payment(s) where such payment(s) is (are) stipulated in the Contract.

31.2.1 **Advance Payment (If applicable)**

i) Invoice for agreed advance amount in original and two (2) copies.

ii) Written, unconditional acceptance of the Contract in one (1) original plus two copies.

iii)The Contractor shall issue Indemnity Bond to the Owner for the amount equal to the advance amount.

31.2.2 **Progressive Payments**

Progress payment for the various activities mentioned under article no. 24.1 (B) in Instruction to Bidders shall be made on production of the followings documents;

1. Invoice for progress payment in original and two (2) copies duly certified by Owner.

2. Progress certificate in one (1) original plus two (2) copies from the beneficiary to the effect that progress achieved is equal to progress invoiced, duly certified by Owner.

32.0 **SPECIFICATIONS**

Contractor agrees that all Equipment or materials furnished will be in strict accordance with the Specifications, provided however, that any apparent omission or error in the Specifications will be met by the Contractor if such omission is necessary for the functioning of the Equipment or material to be supplied and that the Contractor, prior to proceeding with the work under Contract, will call to the attention of Owner any such omission or error or ambiguity in the Specifications requiring clarification.

33.0 **GENERAL**

33.1 In the event that terms and conditions stipulated in the general conditions of Contract should deviate from technical specifications stipulated in the Contract, the latter shall prevail.

33.2 **Losses due to non-compliance of instructions**

Losses or damages occurring to the Owner owing to Contractor's failure to adhere to any of the instructions given by the Owner in connection with Contract execution shall be recoverable from the Contractor.

33.3 **Training of person**

The Contractor shall make necessary arrangements for the practical training of reasonable number of technicians/Engineers of the Owner, if so desired, by the Owner at their works or Subcontractor's / Sub-Contractor's works of manufacture in the operation and maintenance of the Equipment.

33.4 **Recovery of sums due**

All costs, damages or expenses which the Owner may have paid for which under the Contract, Contractor is liable, may be recovered by the Owner (he is hereby irrevocably authorised to do so) from any money due to or becoming due to the Contractor under this Contract or other Contracts and/ or may be recovered by action at law or otherwise. If the sums due to the Contractor be not sufficient to recover the recoverable amount, the Contractor shall pay to the Owner, on demand, the balance amount.

33.5 **Payment etc. not to affect rights of the Owner**

No sum paid on account by the Owner nor any extension of the date for Completion granted by the Owner shall effect or prejudice the rights of the Owner against the Contractor or relieve the Contractor of his obligation for the due fulfilment of the Contract.

33.6 **Cut off dates**

No claims by Contractor on this Contract shall be entertained by the Owner after three (3) months after expiry of the Performance Bank Guarantee.

33.7 **Paragraph heading**

The paragraph heading of various articles / clauses shall not affect the construction thereof.

33.8 **Entire agreement**

All the terms and conditions of Contract shall supersede any understanding, promise and presentation, warranty or conditions which conflicts with terms of Contract. No waiver alteration or modification of any provision hereto shall be binding on either party unless approved in writing by the parties to Contract.

33.9 **Acceptance**

With the acceptance of Contract with all its terms and conditions, Contractor waives and considers as void any and all of Contractor's general sales conditions.

33.10 **INDEMNIFICATION**

Contractor does hereby agree to indemnify and hold harmless the Owner from all claims, losses demand clauses of action or suit arising out of the services, labour, equipment and materials furnished by Contractor hereunder

34.0 **GOVERNMENT CLEARANCES**

Contractor shall get all the clearances for the performance of this contract from all such applicable statutory agencies and laws, at his expenses. The Owner shall provide all the necessary information without any delay to the Contractor for the same.

(TO BE SUBMITTED ON BIDDER'S LETTER HEAD)

SUBJECT : TURNKEY EXECUTION OF C.E.T.P. AT ALATHUR, AS PER SCOPE OF WORK MENTIONED IN THE INVITATION TO BID INCLUDING BUT NOT LIMITED TO DESIGN ENGINEERING, MANUFACTURE, PROCUREMENT, SUPPLY TO SITE, INSURANCE, UNLOADING AND LOADING, STORAGE, INSTALLATION, ERECTION, TESTING, TRIAL RUN, COMMISSIONING AND INCLUDING OPERATION AND MAINTENANCCE FOR A PERIOD OF 12 MONTHS FROM THE DATE OF COMMISSIONING

Attn.:-

Dear Sirs,

We have examined the **NIT/ITB Ref. No. ……. dated .....** the scope of work, terms and conditions of CONTRACT and technical specifications. We are prepared to undertake all the WORK of the "CONTRACTOR" as defined in the NIT for a total fixed and firm price of as per the break-up given below:

PREAMBLE TO SCHEDULE OF PRICES

1. The entire Package consisting of the totality of Supplies and Services/ Work(s) shall be covered in the Lumpsum Price.

2. Spares for start-up/ commissioning, two years operation spares are in CONTRACTOR’s scope of supplies and are to be included in the quoted lumpsum price

3. The break-up of LSTK Price pertains to of major items without identifying individual tag nos. It will be the responsibility of the contractor to quote all materials/ equipments required for completion of work as per the contract, irrespective of whether all items are identified above or not

4. Clearance at Port, Airport, Demurrage / Warfage, if any, transportation to the site and loading / unloading will be in the CONTRACTOR’s scope.

5. The Contractor shall indicate the percentage of taxes considered by him in this Price Bid. If, during the execution of the contract, there is an INCREASE in the percentage of the taxes within contractual completion period, then the same will be borne by the Owner after consultation and finalization with Department of Pharmaceuticals

6. The CONTRACTOR shall be liable and pay all taxes, duties, levies, lawfully assessed against the OWNER or the CONTRACTOR in pursuance of the CONTRACT. The CONTRACTOR shall be solely responsible for all taxes that may be levied on the CONTRACTOR's turnover & profit or on the earnings of any of his employees or personnel engaged by him and shall hold the OWNER indemnified and harmless against any claims that may be made against the OWNER in this behalf. The OWNER does not undertake any responsibility whatsoever regarding any taxes levied on CONTRACTOR and/or his personnel by Centre/State/Local Authorities. The Taxes shall be deducted where the said provisions shall be applicable and/or obligatory on the part of the OWNER.

7. All taxes and duties will be reimbursed at actual on submission of documentary evidence / Tax Paid Invoice limited to ceiling mentioned in LSTK Break up of Prices and in cognizance with Break up of Taxes and duties. However, during the execution of Contract, if OWNER is required to pay any quoted Tax/Duty directly to the tax authorities, the same shall be paid by OWNER. In such case the amount so paid or quoted amount whichever is higher shall be deducted from the LSTK Price. In case of revision in indicated rates, the same limit will be suitably revised. However any increase in taxes or introduction of new taxes beyond the contract period (where delay is attributable to the Contractor) shall be to the account of the Contractor.

8. Deleted

9. Deleted

10. For CONTRACTORS who have to bring equipment and material from outside Tamilnadu will have to obtain necessary registrations and take appropriate steps as required under Tamilnadu State Laws.

11 (a) If it is not feasible for the Bidder to enter the items or relative values in the relevant Proforma for Price Bid due to limitation of space, the Bidder may retype the Forms wherever required and fill up the rates either by hand or by typing the values and/or items as required. The Bidder further declares that in the event of any discrepancy in the wording between the Proforma for Price Bid enclosed with the Tender and with any subsequent addendum and the wording in the forms prepared by the Bidder, the wording given in the Proforma for Price Bid enclosed with the Tender or with any subsequent addendum as the case may be, shall prevail and the values submitted by the Bidder shall be taken cognizance of and read accordingly.

(b) All the original Price Schedule Forms shall be enclosed duly signed and stamped by the Bidder along with the priced sheets prepared by the Bidder pursuant to (a) above.

12. The Bidder shall further ensure that all the originals written by hand or with signature affixed thereto shall be in Blue ink.

13. The payment break-up within the parameters indicated shall be submitted and finalised in the schedule of Activities in accordance with the payment terms set out in the ITB. Bidder must submit Monthly Payment and Progress schedule in a tabular form.

14. THE UNPRICED COMMERCIAL BID SHALL CONTAIN <u>PRICE CONFIRMATION COPY</u> I.E. A PHOTOCOPY OF THE PRICED BID WITH THE PRICES BLANKED OUT, DULY SIGNED AND STAMPED AND STRICTLY AS PER THE FORMAT.

15. IN THE ABOVE PRICE CONFIRMATION COPY, BIDDER IS TO CONFIRM THEIR QUOTED PRICES WITH INDICATION AS "QUOTED". BIDDER IS ALSO TO INDICATE THE PERCENTAGE OF TAXES AND DUTIES CONSIDERED IN THE PRICED BID. IF THE BIDDER LEAVES TO QUOTE AGAINST AN ITEM IN THE PRICE BID, IT WILL BE IMPLIED THAT SUCH ITEM IS EITHER INCLUDED ELSEWHERE IN THE QUOTED PRICES TO EXECUTE THE CONTRACT IN TOTALITY.

16. THE SCHEDULE OF PRICES SHALL ALSO INDICATE PRICES IN FIGURES AS WELL AS IN WORDS. IN CASE OF DIFFERENCE, THE AMOUNT MENTIONED IN WORDS SHALL BE CONSIDERED. THE PRICES SHOULD BE STRICTLY QUOTED AS SPECIFIED IN ANNEXURE-1.2 OTHERWISE THE BID MAY BE REJECTED. WHEREVER UNIT RATE AND TOTAL RATE IS INDICATED, IN CASE OF ANY DIFFERENCE IN TOTAL, THE UNIT RATE WILL GOVERN.

It is understood that as a condition of this proposal, no agreement, oral or otherwise will exist until a written agreement has been signed by an authorised representative of OWNER and approved by the concerned Government Authorities and Financial Institution(s). Any expenses incurred by the bidder prior to execution of such agreement will be borne exclusively by the bidder without obligation of any kind on the part of OWNER, regardless of the circumstances under which such expenses were incurred.

It is the bidder's intention, if awarded the CONTRACT, to comply fully and in all respect with CONTRACT documents.

For and on behalf of : …….

Stamp & Signature : …….

Name : …….

Designation : …….

Date : …….

(TO BE SUBMITTED ON BIDDER'S LETTER HEAD)

Attn.:-

Dear Sirs,

We have examined the NIT/ITB Ref. No **……** dated ..... the scope of work, terms and conditions of CONTRACT and technical specifications. We are prepared to undertake all the WORK of the "CONTRACTOR" as defined in the NIT for a total fixed and firm as per the break-up given below:

Sl. No.	ITEM & DESCRIPTION	Quoted Price (INR)		Tax in % (Bidder to specify)	Tax value (INR)	Total Amount (INR)
		In figures	In words			
1	PLANT & MACHINERY: 1.1 SUPPLY Design, engineering, manufacture, procurement, supply to site including freight, Insurance, unloading and storage at site, of all the plant and machinery in the conveyance system and treatment plant as given in the technical specifications of this tender document and including special software for parameters, performance, online monitoring and web application programme with exclusive domain					
	1.2 ERECTION & COMMISSIONING Installation, erection, testing, trial run and commissioning of all the equipment associated with the conveyance system and treatment plant area as described in the technical specifications					

Sl. No.	ITEM & DESCRIPTION	Quoted Price (INR)		Tax in % (Bidder to specify)	Tax value (INR)	Total Amount (INR)
		In figures	In words			
	1.3 OPERATION & MAINTENANCE Complete operation and maintenance of the CETP, including manpower, chemicals, consumables, replacements, spares, media top ups etc.., except power (which will be provided by the Owner) for ONE YEAR from the date of commissioning and INCLUDING supply of mandatory spares for TWO YEARS from the date of commissioning					
2	CIVIL WORKS : Design, engineering and construction of all civil works related to the conveyance system and treatment plant as given in the technical specifications, including material and labour.					
3	**TOTAL L.S.T.K. Price(1 + 2)**					

For and on behalf of : …….

Stamp & Signature : …….

Name : …….

Designation : …….

Date : …….

SUMMARY OF TERMS & CONDITION QUOTED
(BIDDER MUST CONFIRM/COMMENT POINT BY POINT)
NIT NO: .....
FOR
COMMON EFFLUENT TREATMENT PLANT(CETP) AT ALATHUR, UNDER GOI's CLUSTER DEVELOPMENT PROGRAMME FOR PHARMA SECTOR(CDP-PS)

BIDDER'SNAME : _____

BID NO. : _____

WE CONFIRM/CLARIFY AS FOLLOWS :

SL.NO	DESCRIPTION	BIDDER'S CONFIRMATION/ ACCEPTANCE
1.0	PRICE QUOTED AS PER THE PRICE SCHEDULE	CONFIRMED
2.0	QUOTED FIRM PRICES TILL HANDING OVER OF THE DULY COMMISIONED PLANT	CONFIRMED
3.0	TAXES & DUTIES ALL TAXES, DUTIES AND LEVIES, LAWFULLY ASSESSED AGAINST THE OWNER AND THE CONTRACTOR IN PURSUANCE OF THIS CONTRACT, WILL BE TO CONTRACTOR'S ACCOUNT. IF REQUIRED, THE CONTRACTOR SHALL HAVE HIMSELF TO GET REGISTERED WITH LOCAL SALES TAX AND SERVICE TAX AUTHORITIES AT SITE AS PER STATUTORY REQUIREMENT	CONFIRMED
4.0	COMPREHENSIVE INSURANCE CHARGES FOR COMPREHENSIVE ALL RISK INSURANCE TILL HANDING OVER OF PLANT TO OWNER	QUOTED / NOT QUOTED
5.1	THE INSURANCE COVERS SHALL BE IN THE JOINT NAMES OF THE OWNER AND THE CONTRACTOR TO COVER ALL RISKS TILL HANDING OVER OF UNIT (PLANT).	: CONFIRMED
6.0	TERMS OF PAYMENT AS PER ITB.	: CONFIRMED
7.0	BID SECURITY (EMD): AS PER FORMAT IN ITB (IT IS MANDATORY REQUIREMENT. THE OFFER WITHOUT EMD WILL BE REJECTED)	:FURNISHED/ NOT FURNISHED

8.0	A) SECURITY DEPOSIT CUM CONTRACT PERFORMANCE BANK GUARRANTEE AS PER ITB REQUIREMENT AND AS PER PROFORMA F-10	: CONFIRMED
9.0	GUARANTEE/WARRANTIES AS PER ARTICLE 18 OF A02 OF ITB	: CONFIRMED
11.0	OBTAINING ALL STATUTORY APPROVALS REQUIRED FROM GOVT. / OTHER AGENCIES IN CONTRACTORS SCOPE AS PER ITB	CONFIRMED
12.0	SPARES LIST FOR 2 YEARS OPERATION	: QUOTED/ NOT QUOTED
13.0	CHARGES TOWARDS INSPECTION & TESTING AS PER ITB REQUIREMENT INCLUDED IN THE TOTAL LSTK PRICE	: CONFIRMED
14.0	COMPLETION PERIOD	
	A)MECHANICAL COMPLETION	_____ MONTHS
	B) COMMISIONING AND HANDING OVER	_____ MONTHS
	C) EFFECTIVE DATE SHALL BE THE DATE OF ISSUANCE LOI	CONFIRMED
	D) BAR-CHART FOR ARRANGEMENT OF LICENSE, BASIC DESIGN, DETAIL ENGG. MANUFACTURE, DELIVERY, ERECTION & COMMISSIONING, COVERING ALL MAJOR ACTIVITIES.	: ENCLOSED
15.0	A) PRICE REDUCTION FOR DELAY IN COMPLETION AS PER ITB	: CONFIRMED
15.1	FORCE MAJEURE CONDITIONS AS PER ITB	: CONFIRMED
16.0	VALIDITY 120 DAYS FROM TECHNICAL BID OPENING	: CONFIRMED
17.0	TECHNICAL CONFORMITY WITH TECHNICAL SPECN. (STRIKE OUT WHICHEVER IS NOT APPLICABLE)	THE OFFER IS AS PER ITB. NO DEVIATION OR DEVIATIONS AS PER ENCLOSED SHEET

18..0	(A) ALL OTHER TERMS & CONDITIONS AS PER ITB.	1) ACCEPTED WITHOUT ANY DEVIATION 2) ACCEPTED WITH UNAVOIDABLE DEVIATIONS AS ENCLOSED
	(B) PRINTED CONDITIONS OF SELLER IN THE OFFER IF INCORPORATED ARE HEREBY WITHDRAWN	CONFIRMED.
19.0	REFERENCE LIST OF USERS OF SIMILAR PLANT	ENCLOSED.
20.0	**NAME(CONTACT PERSON -1)**	
	DESIGNATION:	
	TELEPHONE NO:	
	FAX NO:	
	E MAIL (2 E-Mail IDs to be furnished)	
21.0	**NAME(CONTACT PERSON-2)**	
	DESIGNATION:	
	TELEPHONE NO:	
	FAX NO:	
	E MAIL (2 E-Mail IDs to be furnished)	
IT IS CONFIRMED THAT IN CASE ANY OF THE TERMS AND CONDITIONS MENTIONED IN THIS SUMMARY ARE AT VARIANCE WITH THOSE INDICATED ANYWHERE ELSE IN OUR OFFER; THE CONDITION INDICATED IN THIS SUMMARY SHALL PREVAIL.		

BIDDER'S SIGNATURE WITH COMPANY'S SEAL DATE:

NIT NO: .....Dated .....

SUBJECT: EXCEPTION/DEVIATION

Bidder shall either stipulate in this form

1. We make no exception/deviation to this bid or
2. This bid is subject to the following exception/deviations and fill in the below

Sl. No	Section No. of bid doc.	Page No.	Clause No.	Article , Paragraph No.	Requirement	Exception/ Deviation
1						
2						
3						

NOTE :

1. If unavoidable, Bidder may stipulate deviations to the requirements of the Bidding Document only in this format.
2. Bidder shall furnish Technical and Commercial deviations, if any, separately. Also, Technical deviations shall be furnished separately for each discipline i.e. Process, General Civil, Structural, Architectural, Piping, Mechanical Equipment, Pressure Vessels, Rotating Equipment, Electrical, Instrumentation, Construction etc.
3. Any deviations stated elsewhere in the bid shall not be taken into account and may render the bid non-responsive and liable to be rejected.
4. **A soft copy of this F-71, in editable form, shall also be submitted by the Bidder.**

Note: No variation in Price will be allowed for any deviation.

For and on behalf of ……

Stamp & Signature : ……

Name : ……

Designation : ……

Date : ……

PROFORMA FOR EMD

Note: To be executed on a non-judicial paper of appropriate value.

IN CONSIDERATION of ……..(Owner) having its registered office at …… (hereinafter called 'the Society' which expression shall unless repugnant to the subject or context includes its successors and assigns) having agreed to exempt _____ (hereinafter called 'the said Tenderer(s)' which expression shall unless repugnant to the subject or context includes his successors and assigns) from the demand under the terms and conditions of tender No. _____ for _____ hereinafter called 'the said Tender' of such Earnest Money for the due fulfillment by the said Tenderer(s) of the terms and conditions contained in the said tender _____ for _____ _____ on production of Bank Guarantee for Rs._____(Rupees_____only) We _____ Bank hereinafter referred to as 'the Bank' do hereby undertake to pay to the company an amount not exceeding Rs._____ (Rupees _____ only) against any loss or damage caused to or suffered or would be caused to or suffered by the said Society by reason of any breach by the said tenderer(s) of any of the terms and conditions contained in the said tender (the decision of the Society as to any such breach having been committed and loss suffered shall be binding on us).

2. WE _____ Bank do hereby undertake to pay the amounts due and payable under this Guarantee without any demur merely on a demand from the Society stating that the amount claimed is due by way of loss or damage caused to or would cause to or suffered by the Society by reason of any breach by the said Tenderer(s) of any of the terms and conditions contained in the said tender or by reason of the said Tenderer's failure to keep the tender open. Any such demand made on the Bank shall be conclusive as regards amount due and payable by the Bank under this Guarantee. However, our liability under this guarantee shall be restricted to an amount not exceeding Rs._____ (Rupees _____ only).

3. WE _____ (Bank) further agree that the guarantee herein contained shall remain in full force and affect during the period that would be taken for the finalisation of the said tender and that it shall continue to be enforceable till the said tender is finally decided and order placed on the successful tender(s) and/or till all the dues of the Society under/or by virtue of the said tender have been fully paid and its claims satisfied or discharged or till a duly authorised officer of the Society certified that the terms and conditions of the said tender have been fully and properly carried out by the said Tenderer(s) and accordingly discharges the guarantee. Unless a demand or claim under this guarantee is made on us in writing on or before the _____, we shall be discharged from all liability under this guarantee thereafter.

4. WE _____ Bank, lastly undertake not to revoke this guarantee during its currency except with the previous consent of the Society in writing.

Dated _____ day of _____ 20_____

CORPORATE SEAL FOR BANK

Note: To include 6 months claim period over and above the period mentioned in the paragraph for the validity of the Bank guarantee in the tender.

PROFORMA FOR PBG

(To be prepared on Stamp paper issued in the name of Bank)

The BANK GUARANTEE No._____made this day of _____between_____ a Bank incorporated and having its registered office at _____(hereinafter called BANK) which expression shall unless repugnant to the context or contrary to the meaning thereof include its successors and assigns on the one part and ……..(Owner), a Company registered in India under Companies Act, 1956 and having its registered office at …….., India to the context or contrary to the meaning thereof include its successors and assigns on the other part.

WHEREAS in pursuance to the agreement dated_____(hereinafter called (CONTRACT) ENTERED INTO BETWEEN ……..(Owner) (hereinafter called OWNER and _____a Company incorporated in _____(hereinafter called CONTRACTOR) which expression shall unless repugnant to the context or contrary to the meaning thereof include its successors and assigns, for supply of _____ _____as envisaged in the Contract, Contractor has to submit a Security Deposit-cum-Performance Bank Guarantee for Rs……

CONTRACTOR accordingly agrees to furnish the Security cum performance Bank Guarantee as hereinafter contained towards fulfillment of all of its obligations under the contract.

NOW THIS DEED WITNESSETH AS FOLLOWS:

1. In pursuance of the Contract, the Bank hereby guarantees as a direct responsibility to OWNER that the BANK is holding the amount of Rs._____at Owner's disposal and hereby promises and shall be bound to pay to OWNER, forthwith at Owner's written notice stating that the contractor has failed to fulfill its obligations under the contract for reasons for which contractor is liable and without any protest or demur and without recourse to contractor and without asking for any reasons as to whether the amount if lawfully asked for by Owner or not, the entire amount or the portion thereof as mentioned by Owner in the notice.

   The decision of the Owner as to whether the terms and conditions of this Security Deposit-cum-Performance Bank Guarantee have been observed or not shall be final and binding on the BANK. In any case, however the Bank's responsibility under this Security Deposit-cum-Performance Bank Guarantee is limited to Rs._____ _____.

2. We undertake to pay to the Owner any money so demanded notwithstanding any dispute or disputes raised by the Contractor in any suit or proceeding pending before

any Court or Tribunal relating there to our liability under this present being absolute and unequivocal..

3. This Security Deposit-cum-Performance Bank Guarantee shall be valid for an initial period of _____months from the date of this Bank Guarantee No._____ dated_____ _given by the Bank to Owner become effective. Upon issuance of Commissioning / Erection / Completion Certificate, according to terms of contract on expiry of _____months after the issuance of the above mentioned certificate of commissioning / erection / completion certificate, the Security Deposit-cum-Performance Bank Guarantee shall become null and void.

4. This Security Deposit-cum-Performance Bank Guarantee shall be in addition to and shall not affect or be affected by any other security now or hereafter held by Owner on account of money hereby intended to secure and Owner at its discretion and without any further consent from the Bank, and without affecting its rights against the Bank, may compound with, give time or other indulgence to or make any other arrangement with Contractor and nothing done or omitted to be done by Owner in pursuance of any authority or permission contained in this guarantee, shall affect of discharge the liability of the Bank.

5. UNLESS PREVIOUSLY CANCELLED BY THE OWNER, this Security Deposit-cum-Performance Bank Guarantee will remain in force initially upto _____months from the effective date of Bank Guarantee No._____dated_____ given by the Bank to the Owner and the subject to provisions of paragraph 3 above will stand automatically cancelled on the expiry of the said period. Unless demand or claim under this Bank Guarantee is made on Bank in writing within six months from the date of expiry of this Bank Guarantee, all the rights of Owner against the Bank shall be forfeited and Bank shall be relieved and discharged from all the liabilities hereunder.

6. Any notice by way of request, demand or otherwise hereunder may be sent by post to the Bank, addressed as aforesaid, and if sent by post, it shall be deemed to have been given at the time when it would be delivered in due course of post, and in proving such notice, when given by post, it shall be sufficient to prove that the envelope containing the notice was posted and certificate, signed by an officer of the owners, to the effect that the envelope was so posted, shall be conclusive.

7. The Security Deposit-cum-Performance Bank Guarantee is to be returned to the Bank after its expiry in terms of Paragraph 5 above.

8. The Bank declares that it has the power to issue this guarantee and the undersigned have full power to do so.

   Dated_____this _____day of _____Indicate the name of the Bank with stamp)

INTRODUCTION AND PROCESS DESCRIPTION

COMMON EFFLUENT TREATMENT PLANT FOR C.P.I.I.U.C AT SIDCO PHARMACEUTICAL COMPLEX, ALATHUR, KANCHIPURAM DISTRICT

TECHNICAL SPECIFICATIONS OF THE PROJECT

Introduction

- The Project has the following major aspects:

    1. Waste Water & Sewage Generation & Conveyance Management
    2. Combined Waste Water Treatment Process
    3. Treated Water (High Purity) storage and re-distribution

- The sources are from various Users within SIDCO PHARMA COMPLEX, ALATHUR, THIRUPORUR, Tamilnadu

- Treatment Philosophy and Technology shall be evolved after detailed study of the waste water characteristics, quantification analysis and its treatability. Care shall be taken to select the correct approach, the best technology and high quality components confirming to Good Engineering Practices and Good Management Practices.

Design Philosophy:

CONVEYANCE MANAGEMENT

A: Effluent Conveyance

There shall be an Electro Magnetic Flow Meter installed in every unit listed above. This EMFM will note, record and report quantity of waste water generated from each unit. Each unit has an existing tank for collecting their effluent. From this tank, each unit shall be install / use existing pump to transfer to the main conveyance header. This EMFM shall be located in this pipe line

There shall be a CENTRAL HEADER which shall convey the waste water from various units to the treatment location.

There shall be one point (opposite to M/s Clarion and as indicated in the Conveyance Routing) where the effluent line will be broken and a sump will be constructed. From there, a pumping system shall be in place to convey the effluent to the treatment process area. These details are provided in the routing map.

B: Sewage Conveyance

TREATMENT MANAGEMENT

TO TREAT THE WASTE WATER AND THEN PROCESS IT THROUGH R.O. PLANT TO RECOVER HIGH PURITY WATER FOR RE-USE.

A: Effluent Treatment – Conceptualization

The effluent from various industrial units are not easily bio degradable. The reports indicate high TDS and high COD and also high BOD.

The characteristics of effluent also will vary from one generator to the other. Even with one industrial source, at various times, one can expect varying quality of effluent generation.

Conventional approach to high TSS, high TDS & high COD effluent involves Primary Treatment using massive quantities of chemicals and generating massive volumes of hazardous sludge.

After this, the effluent is normally taken through a Secondary Biological Treatment and followed by high end filtration systems

In this case, it has been decided to adopt Electrolytic Degradation process for removing excess BOD, TSS & COD from the primary effluent. The detailed description, principles, design basis is provided in this report. Actual trials have been undertaken with the original effluent to determine the efficacy of the treatment and the design has been based on this actual trials done.

After Primary treatment, the effluent will be MIXED with the sewage and then processed through Biological Treatment. Sewage provides the fundamental balance of carbon, nitrogen and phosphorus along with the colony of bacteria required to break down the organics.

B: Sewage Treatment – Conceptualization

Sewage is easily bio degradable when compared with effluents. A specialized Enzymatic Remediation Program is included in the process. This ERP will start with the addition of special bio culture enzymes in the generating unit itself.

These powerful enzymes proliferate in the conveyance system and effectively reduce the deposition of organics in the pipe line. In addition, they bring about a significant level of bio activity in the sewage so that, when the effluent is mixed with the sewage and processed through biological treatment, the process is enhanced significantly , resulting in a stable output.

C: MACRO LEVEL PROCESS FLOW CHART

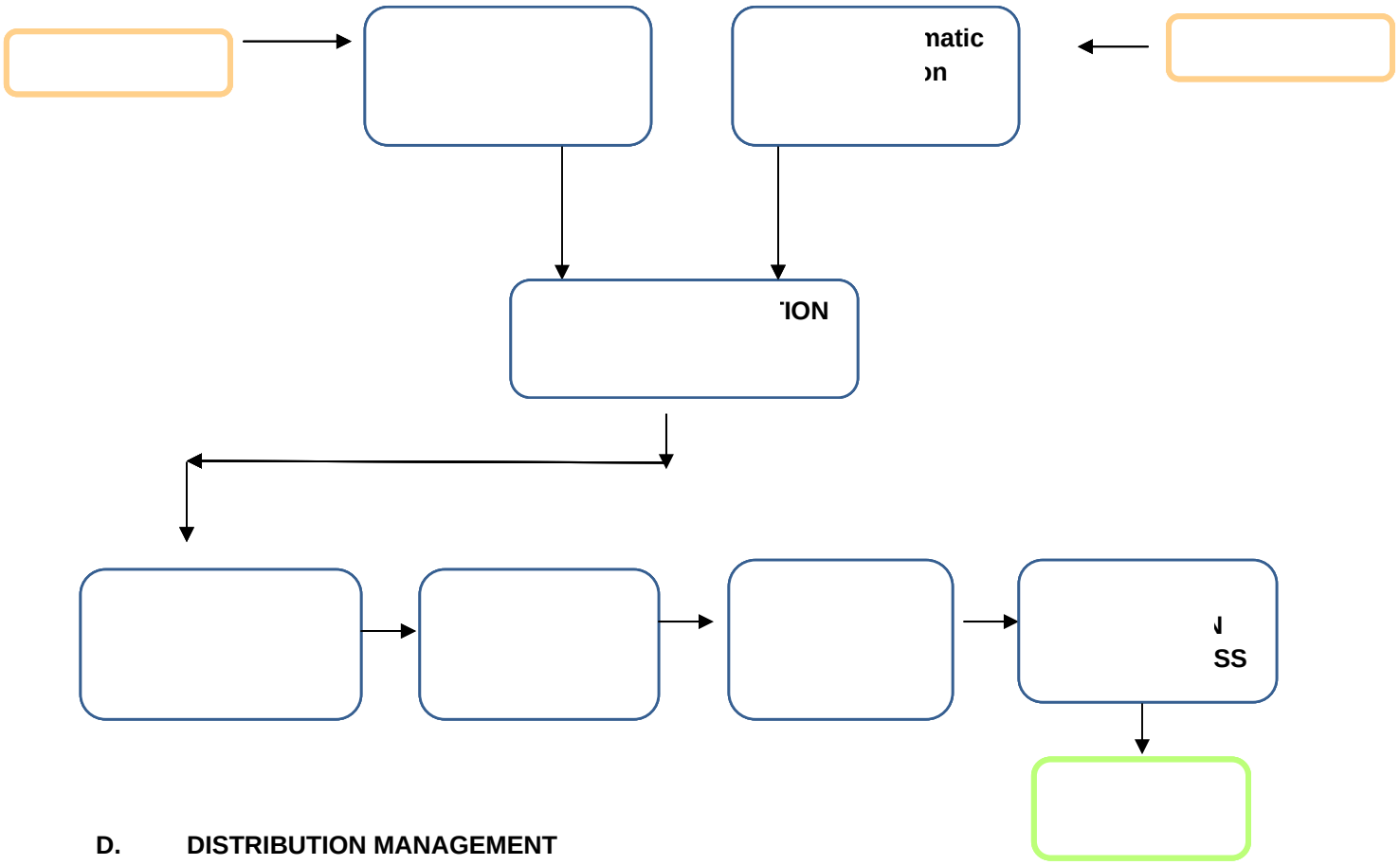

D. DISTRIBUTION MANAGEMENT

The treated water i.e. permeate of the R.O. Plant is collected in a Treated Water Tank.

From here, it is proposed to supply to all the Units through a suitable hydro pneumatic system . Hydro Pnuematic systems are highly evolved and technically superior processes that are adopted very widely, to replace conventional gravity mode supply. Through this system, supply and monitoring is integrated into one unit and at all points of time, water will be available at all locations in the entire distribution network.

Each receiving Unit shall have an electro magnetic flow meter that will provide the recording and the details of the treated water supplied on a daily basis.

PART A: TREATMENT SYSTEM IN THE PROJECT

Design Basis – Inlet Quality & Desired Outlet Quality

The indicative inlet waste water quality and Outlet at RO Permate is given below. The performance of the treatment plant will be based on this inlet quality. The treatment process and specifications should be able to cater to a variation of 20% upwards for each or all of these parameters.

parameter	effluent	sewage	Combined waste water	R.O. permeate (outlet)
pH	7.88	7	6.5 – 7.5	6.5 to 8.0
BOD (ppm)	1900	250	450	< 5
COD (ppm)	7000	600	1200	< 10
Oil & Grease (ppm)	26	20	< 30	< 1
TDS (ppm)	10000	1000	< 5200	< 500
TSS (ppm)	1200	400	< 450	<1
Nitrates (ppm)	43	20	5.7	<1
Phosphates (ppm)	8	10	1.5	< 5
Turbidity (NTU)	< 200	< 75	< 75	< 1

DESIGN BASIS - Quantity

Total effluent generated by all Industries at maximum load	:	87,700 lpd
Total sewage generated by all Industries at maximum load	:	56,250 lpd
Design basis for sizing - Effluent	:	1,00,000 lpd
Design basis for sizing - Sewage	:	70,000 lpd
Total waste water for treatment	:	1,70,000 lpd

Keeping in the mind the future projections on expansion and additions and also to provide flexibility of treatment options and sustainability of treatment even in case of emergencies, 100% redundancy is to be inbuilt in the process design, sizing of tanks and of planning the machinery for treatment.

This is reproduced in the table below:

Source	Maximum KLD	Additional KLD	Total Design KLD
Effluent	100	100	200
Sewage	70	70	140
Total	170	170	340

The process design has to be done in such a way to facilitate smooth operations and sustained output, even in case of break downs / problems.

Thus, each unit operation has an “alternative” route through which the waste water can be processed. This ensures maximum utilization and productivity of the effluent management program.

Redundancy has to be provided without affecting economics through integrated engineering designs.

A: TREATMENT PLANT AREA

Detailed Description of Process Selected

A EFFLUENT TREATMENT – Primary Electrolytic Process

Effluent from various industries are conveyed through piping network and reach the Effluent Collection Tank

From here, it is pumped through Primary Treatment done through Electrolytic Process. The description of Electrolytic Process and how it provides cost effective and technically superior alternative to conventional physic – chemical separation is given herein.

Electrolytic treatment is fast emerging as the alternative to biological treatment due to its ability to operate as a batch process, reduced power consumption, tremendous savings in space and civil works and its ability to give sustained treated water for variations in inlet impurity content.

The heart of the treatment is the ELECTRO CELL. Simplistically, the electro cell containing the four elements viz.. ANODE, CATHODE, ELECTROLYTE & CURRENT bring about the destruction of organics through the process of electrolysis followed by Electro coagulation, floatation and removal of suspended impurity.

Every non bio stable compound exhibits bond energy. When the force applied is greater than the bond energy, there is break down of the compound. When the force is in the form of “passage of electrons” i.e. Electricity, this break down results in the formation of carbon ash + hydrogen gas..

So, in Electrolysis, the DISSOLVED impurity is broken down and converted to SUSPENDED impurity. Once broken down, this suspended impurity is removed from the system by coagulation, floatation and subsequent precipitation.

The process is a combination of three unit operations occurring in a single reactor in one time zone – Electrolysis + Electro Floatation + Electro coagulation

Destruction of organics takes place through bond depolarization. The resultant is carbon in ash form and hydrogen gas. The hydrogen gas is generated in the cathode and this aids the electro floatation process. Aluminum is used as anode and this diffuses in the water providing electro coagulation.

Electro cell does the function of electro destabilization and electro de-emulsification to begin with followed by electro coagulation and agglomeration and electro floatation with the choice of electrodes specially designed to do this job.

Reaction at the anode :

- Me(s) – (3e-) = Me3+(aq)
- Me3+(aq) + 3H2O = Me(OH)3 + 3H+

Reaction at the cathode :

- 2H2O + 2e- > H2 + 2OH-

Key design factors :

1. Type of electrodes &spacing
2. Area of electrodes and charge density
3. Reactor design
4. Charge and Bond Energy
5. Approach velocity

Components in Electrolytic Process:

Effluent is collected in an equalization tank.

From here, it is pumped to the Electro Cell Unit. The Unit has Electro Coagulation Electrodes and skimmer unit. The Electrolytic process releases carbon ash from destruction of organics, which is Electro Floated to the top. The skimmer collects the “froth” and takes it for solid waste management process.

The outlet water is then passed through a tube settler unit for settling the remaining solids. The overflow from the tube settler goes to Common Collection Tank, where it gets mixed with the sewage and taken for further treatment.

Alum dosing is provided at the inlet of the system to accelerate the process of Electro Coagulation. Caustic Dosing is provided in the Equalization Tank to set the Alkalinity Level in the waste water which will significantly improve the Electro Coagulation Process

B COMBINED EFFLUENT TREATMENT – Secondary Biological Process

Biological treatment has been provided to control BOD, COD & TSS

The sewage from all Units shall be pumped into a common collection tank. The overflow from the tube settler of the Primary Electrolytic Process mixes with the sewage in this tank.

From here, it is pumped to the Biological Process.

In Biological Process, air is supplied to the bacteria. Using the oxygen in the air, the bacteria “breaks down” the organics in the waste water. The representative equation is given below:

Air + Bacteria + Organics …….> CO2 + H2O + Sludge

Thus, for a proper biological system, we need both AIR & FOOD to be supplied to the bacteria. We also need a proper BALANCE between the active bacterial culture present in the tank to the food (i.e. waste organics) that is presented to it, for consumption.

A proper biological system also needs a proper nutrient balance i.e. carbon, nitrogen and phosphorus balance to be maintained in the aeration system to ensure assimilation of the organics.

A host of technologies are available today for biological treatment. Extended Aeration Activated Sludge process has been chosen. The process design decision has been taken on the following basis:

Extended aeration is one of the oldest and most trusted processes for bio degradation.

The inlet quality is bound to vary due to the mixing of various sources of waste waters. In such cases, extended aeration process has the capacity to withstand load variations

The inlet is expected to contain more BODn than that will be present in just normal sewage. This nitrogen based BOD destruction is most effectively addressed in extended aeration.

The bio sludge that comes out of the process is nicely digested and easy to de water.

SUBMERSIBLE ASPIRATING AERATION SYSTEMS has been selected instead of BLOWER + DIFFUSER arrangement. The air supply system that has been selected will have significant savings in power, easy to maintain, easy to dismantle and re-assemble, not prone to clogging, will provide uniform oxygenation throughout the tank and will also give a very very fine bubble i.e. 10 micron oxygen bubble which will ensure high Dissolved Oxygen at all points within the system.

For many decades, the conventional systems have been using surface aerators, where the surface water is agitated and thrown in air in an umbrella shape to trap and dissolve oxygen in atmospheric air. Over the years, it has been realized that pumping of air in water is more economical than the surface aerator

actions. Conventional coarse bubble diffused aeration systems have evolved starting from use of slotted / perforated pipes.

As is known, the progressive reduction in size of air bubbles released below the surface, increases the surface area available for oxygen transfer, which results in higher oxygen transfer efficiency. This has resulted in developing fine bubble diffused aeration systems using diffusers, membranes etc. However, the constraints of pore size limit the achievable bubble size reduction in conventional diffusers,.

The aspirator type submersible aerators overcome this constraint through mechanical means. Aspirating aerators, widely used in India over past more than a decade provide high efficiency aeration in form of diffused micro bubbles.

Aspirators are essentially high speed agitators, which cause suction of atmospheric air, which on getting released in the turbulent zone near their propellers, becomes fragmented / micronised. The bubble size reduction is thus achieved through mechanical means and is an improvement over the porous membranes.

Many aspirator designs with terrestrial motors are available. However, the effectiveness / efficiency is limited due to inadequate suction or inadequate reach of the air currents. In many industrial effluent treatment plants (ETPs), the effluent nature can lead to foaming. This also causes difficulty in use of the aspirators with terrestrial motors.

The aspirator type submersible aerators overcome both these constraints. The micronisation of air bubbles is achieved through mechanical means; the very high speed motors cause adequate suction and significant zone of influence while the submersible motors are not affected by water. The oxygen transfer efficiency of the units is hence the highest.

The very high oxygen transfer efficiency i.e. the increased oxygen transfer per unit air volume pumped in, results in lowering air requirement for same treatment parameters. This results in reducing the power consumption of the system.

Through number of installations, it is established that *aspirating aeration* consumes atleast 50% less power than other aeration systems.

Some of the Salient Features of such Submersible Aerators are

- ✓ Design ensures effective aeration & mixing at much lower power consumption.
- ✓ No orifices, nozzles or pores in the system. Hence no clogging and recurrent requirement of clean up as in case of bottom grids.
- ✓ Installation of multiple independent units offers more flexibility in operation.
- ✓ No pre installation requirement like civil work. Units can be installed in an existing operation tank without emptying it.
- ✓ An important aspect of the aeration systems is the mode of oxygen transfer. In surface aeration, the oxygen first dissolves in water and this dissolved oxygen is drawn by bacteria from water. Thus the final oxygen transfer to bacteria is from water and this makes it necessary to have higher dissolved

oxygen (DO) level in the system. In case of submersible aeration, the oxygen transfer takes place across the air bubble and both water and bacteria are simultaneously competing and drawing the oxygen from the air. Thus in these systems, the DO level is not as relevant and is generally found to be lower. As the bubble size decreases, this observation is more marked.

- ✓ easy to maintain, easy to dismantle and re-assemble,
- ✓ will also give a very very fine bubble i.e. 10 micron oxygen bubble which will ensure high Dissolved Oxygen at all points within the system.

A typical aspirating aerator has a submersible motor and it has a propeller which rotates at 2800 rpm imparting large velocities to the liquid around it. The high velocities cause vortex where atmospheric air is sucked through air intake pipes open to atmosphere. The unit is positioned with help of floats and secured with use of ropes. The atmospheric air released in the highly turbulent zone is broken in form of microbubbles (of 10 micron size) and this formation of microbubbles contributes towards the very high efficiency of oxygen transfer.

Hence under normal ETP conditions, the oxygen requirement being fixed, less volume of air needs to be pumped in to achieve the desired oxygenation. This results in tremendous energy savings. Compared to surface aerator there is 50-55% power saving while the power consumed is about 40% less than diffuser systems. The total unit is in SS / marine bronze & high grade plastic construction.

Secondary clarification to settle the bio sludge is provided with sludge recirculation. Typical re-circulation will be between 0.6 to 0.9 Q (Q being the feed flow rate), in order to maintain proper MLSS .SVI will be monitored properly to ensure quality of effluent overflow in terms of clarity.

Typically, F/M values of 0.1 to 0.2, MLVSS of 2500 ppm, SVI < 150, VSS to SS ratio of 0.7 and MLVSS to MLSS ratio of 0.63, sludge age (Cell residence time) of about 22 days, Yield coefficient of 0.5 to 0.61, Endogenous decay coefficient of 0.05 to 0.07, substrate removal coefficient of 0.038 shall be taken as design basis for Complete Mix Activated Sludge Process, to achieve about 90 to 95% substrate removal efficiency.

Secondary clarifier is designed to accommodate a overflow rate not greater than 16 m3/d/m2 and solids loading not exceeding 150 kgs/day / m2. Depth to diameter is carefully designed to prevent pin flocs, floating matter due to dislodged sludge (created due to denitrification inside secondary clarifier and subsequent release of nitrogen) and froth formation.

The components of biological treatment shall be the following:

1. Aeration tank with aspirating aeration
2. Secondary clarifier
3. Return sludge pumps

C Tertiary Filtration & Ultra Filtration Process

Sand and carbon filtration systems shall be provided to bring down the turbidity, TSS and to be able to reduce the organics to some extent of fine polishing through activated carbon adsorption.

Typically, filtration rates shall be taken as 12 to 13 m3/hr/m2 for sand filter and 15 to 17 m3/hr/m2 for carbon filter.

Sand media would consist of gravel, pebble, coarse and fine sand

Activated carbon shall be chosen carefully to have high Iodine Number (>999) and we have opted for high quality carbon which is thermally extracted.

Important Note: MS tanks are not acceptable for sand and carbon filters. The site is near to coastal area and whatever coating one may give, corrosion would be inevitable. Thus, FRP tanks are provided for the same. Though costlier, the durability, ability to withstand corrosive atmosphere is very high with FRP.

Ultra Filtration using hollow fine fibre membranes have been employed to control SDI, to reduce COD to the extent of high molecular weight compounds that are semi / non bio degradable (this will prevent organic fouling of the RO process)

Ultra filtration is more of a “roughing” or “protecting” filter that will enable ionic level removal to proceed without much of a problem in the downstream hyper filtration process (R.O. membranes)

REJECT based UF system has been selected (not dead end filter) as one would expect high molecular weight loading (due to the nature of the waste water). Typically, operating flux will be between 30 to 45 GFD and the UF will have a MWCO of about 120 KD.

The UF will come with proper PLC system for operation of normal flow, rinse, backwash, rinse and normal flow cycles interposed with fast flush of the UF membranes.

To protect the UF membranes, micron / bag filter is provided upstream. PP spun cartridge in SS housing has been selected with about 25 micron rating in case of micron filter and PP bags with 25 micron rating enclosed in SS housing for bag filter.

Separate back wash pumps are provided for backwashing & rinsing the UF modules. CIP system has also been provided (operated through manual valves) to clean the membranes as and when required.

The UF modules will be mounted on MS Epoxy skid.

The components of Tertiary Filtration Process will be:

- Filter feed pump
- Sand filter
- Carbon filter
- UF feed tank

- UF feed pump
- UF feed filter
- UF module in MS epoxy skid
- PLC for UF operations
- UF backwash pumps
- UF C.I.P. system consisting of CIP tank, CIP micron filter and CIP pump
- Chemical dosing in feed to UF system

D Reverse Osmosis Process

R.O. process has been employed to generate high purity water from the waste water through membrane separation process.

The design basis of the R.O. plant shall be given as below:

- The treatment process has been designed for 100% redundancy in Stage 1. The Stage 1 has TWO SEPARATE PARALLEL STREAMS.
- Each stream is capable of taking 170 KLD.
- In practice, ONLY ONE STREAM will be operational for the total 100% load of the entire plant.
- The reject shall be generated only from ONE STREAM in practice.

Stage 1 Feed Flow Rate (m3/hour)	= 170 / 20 = 8.5 m3/hr
Recovery in Stage 1 considered (%)	65
Hence, reject generated in Stage 1 (m3/hr)	= 8.5 x 35% = 2.975 m3/hr Rounded off to : 3 m3/hr
This reject will now be processed through Stage 2. This is the reject for 170 KLD i.e. 100% of load contribution of the Plant. Stage 1 has ONE MORE PARALLEL STREAM. So, even if one stream has some problem, or undergoing cleaning etc.., we can operate the second stream. But, it is to be noted that, at any point of time, ONLY ONE STREAM will be operational.	
For Stage 2, we have assumed that BOTH STREAMS ARE OPERATIONAL CONTINUOUSLY (due to any emergency scenario)	
Reject from Stage 1 which will feed Stage 2 (m3/hr)	3 m/hr for 100% load x assumed that BOTH streams are working at tandem (emergency scenario) = 6 m3/hr
Hence, total maximum feed to Stage 2 (m3/hr)	6 m3/hr
Recovery in Stage 2 (%)	50%

Hence, the MAXIMUM reject generated (m3/hr)	= 6 x 50% = 3 m3/hr
Hours of operation (hours)	20
Hence, the maximum reject quantity (KLD)	=3 x 20 = 60 KLD

- First stage Membranes are spiral wound, polyamide thin film composite brackish water membranes with active surface area of < 375 sq.ft and mill space > 31 mill.
- Second stage Membranes are spiral wound, polyamide thin film composite sea water membranes with active surface area of < 300 sq.ft and mill space > 31 mill.
- Both stages are designed for low flux to prevent fouling. Typically, with UF as pre treatment, one can design RO system for about 17 GFD as flux. But, due to the nature of the effluent, we have considered a far lesser value as the design flux. Typically the flux is < 15 GFD.

Reverse Osmosis shall be a HYPER FILTRATION process. The product is received perpendicular to the feed flow and reject is carried forward to the next membrane / stage in series.

The core design of the R.O. plant is based on the following dynamics:

1. Feed Impurity
2. Recovery desired

Feed impurity:

The purpose of the hyper filtration process if to remove ionic impurities of even sparingly soluble salts. Thus, any other component in the water becomes an “impurity” w.r.t. the R.O. operation.

The impurity in feed can be broadly classified into the following core segments:

- ✕ Physical Impurity measured as T.S.S. & Turbidity
- ✕ Chemical Dissolved Impurity generally measured as T.D.S, Total Hardness
- ✕ Presence of dissolved metals
- ✕ Presence of high silica
- ✕ The buffering capacity of the water measured as pH, Alkalinity, Hardness and TDS and represented through L.S.I – Langlier Saturation Index or S.D.I. – Stiff Davis Index which provides the “scaling / corrosive tendency information” about the feed water
- ✕ Presence of dissolved organics
- ✕ Presence of organic fouling components in the feed water
- ✕ Presence of oxidative compounds in the water

The recovery of the R.O. plant is determined on the basis of FLUX and BETA FACTOR

Flux is the amount of permeate flow through unit area of membrane per unit time. The surface area of the membrane is fixed. The feed flow rate is fixed. Thus, flux becomes the operating condition.

More flux means more flow / unit area. This will save the NUMBER of membranes and pressure vessels and would bring down the Cap Ex. However, high flux means more pressure on the membrane and more concentration per unit length of the travel of 40" (being the length of one membrane).

This means the tendency to scale and deposit is significantly enhanced. This would mean blocks, higher pressure differential, reduced permeate output and / or more cleaning required. This may also result in physical stress damage to the membrane matrix.

Thus, flux is the core of R.O. design. We have designed the plant based on an extremely conservative flux and have used brackish water membranes in stage 1 and sea water membranes in stage 2.
This would mean more membranes and slightly increased Capital Investment. But the sustainability of the process is significantly enhanced.

In real time, we may get more recovery during the initial period of operations as the membrane surface would be relatively clean… But, irrespective of cleaning and permeate flushing, one may expect the membrane productivity to reduce over time or result in same productivity at higher pressure profiles.

Beta Factor is the concentration polarization standard. The factor is a empirical measure of the extent of fouling and scaling in the R.O. process. The standard is to maintain BF < 1.2 in the last membrane of the stage. In our design, this is easily achieved.

Our R.O. design for this plant shall be robust and capable of handling high impurity input as the flux is taken very conservatively and the staging is done based on our experience to ensure sustainable outlet quality and quantity.

How flux has been considered in this Plant:

Manufacturers' recommendation on flux for UF treated feed water : 15 GFD (gallons per sq.ft per day)

Stage 1 flux of this Plant:

No. of membranes provided	:	12
Active surface area of the membrane	:	375 sq.ft
Total permeate flow rate in stage 1	:	5,500 liters / hour
Hence, permeate flow / membrane	:	458 liters / hour only.
At this flow rate, the operating flux is	:	8 GFD

Stage 2 flux of this Plant:

No. of membranes provided	:	8
Active surface area of the membrane	:	350 sq.ft
Total permeate flow rate in stage 2	:	3,000 liters / hour
Hence, permeate flow / membrane	:	375 liters / hour only.
At this flow rate, the operating flux is	:	7 GFD

Thus, the design is EXTREMELY CONSERVATIVE and will definitely provide sustainable outlet quality, quantity, reduced fouling, consistent pressure profile and reduced cleaning frequency, thus enhancing the life of the membrane

Beta factor (concentration polarization) shall be kept below 1.18 in both the stages.

To protect the RO membranes, the following shall be considered:

- Micron filtration for silt control.
- Chemical dosing to prevent organic fouling and scaling inside the membrane
- CIP system for permeate flushing and chemical cleaning of the membrane
- To protect the high pressure pump, low and high pressure switches have been provided.
- Permeate and reject flow meters have been provided to monitor flow and recovery

The schematic representation of the R.O. process is given below:

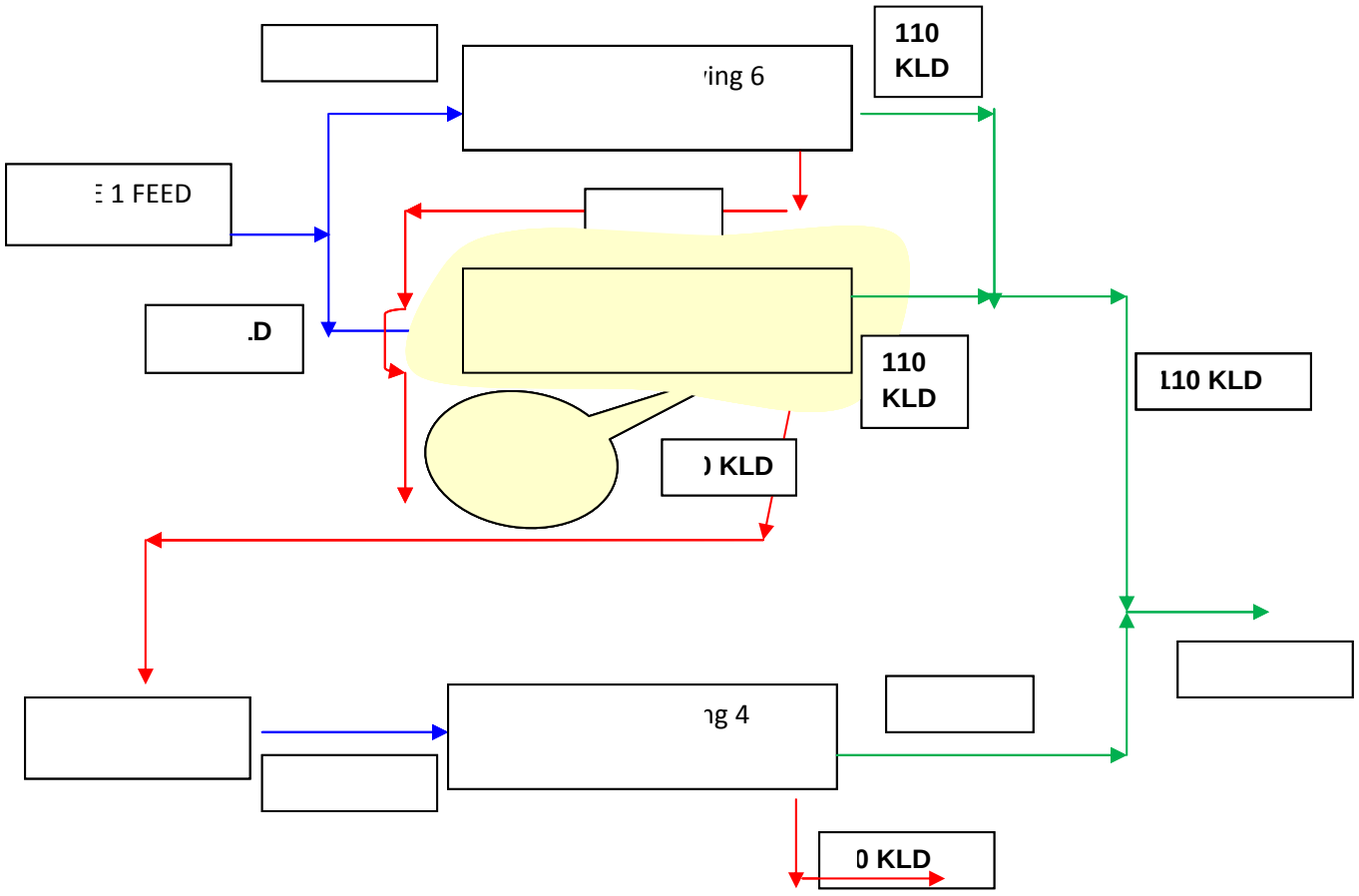

E Solid Waste Management Process

Solid Waste Generation and Management process shall be as follows:

Solids from Bar Screening	Will be collected in specific bins kept near the chamber
Electrolytic Process – Froth from the Electro Reactor and solids from the Underflow of the Tube Settler	This will go to the Solids Holding Tank
Biological Process	Solids will go to the solids holding tank
Backwash Wastes	All backwash wastes will be collected in one tank. From here, it will be pumped to the Tube Settler. The underflow of the tube settler will go to the Solids Holding Tank.

So, all the wastes are collected in one tank. From here, it is pumped through Filter Press. The Filtrate of the filter press goes back to the Common Effluent Collection Tank and the cake is taken for disposal.

DESIGN & SIZING OF PROCESS UNITS:

The basic details of the design of each major equipment is given below. These are indicative and may change during detailed engineering. The Bidder to evaluate the design and sizing given below and accordingly place his Price Bid Offer.

This document is to be read in conjunction to the P&I diagram, Layout and other relevant drawings which form part of this tender document

BASIC DESIGN SHEETS - ALL PROCESS PUMPS

E Process Feed Pump	**P 101 A/B**	
design criteria	flow processed + head required	
The pump takes the effluent from effluent collection tank and pumps it to the Electro Cell Reactor. Discharge to atmospheric pressure only.		
effluent generated by the Units	m3/d	78.7
design capacity taken	m3/d	100
hours of operation	hrs/d	20
feed flow rate of pump provided	m3/hr	5
maximum vertical length of the feed pipeline (suction + discharge)	mts	5.5
number of valves on operation in the feeder line	nos	4
approx number of bends / tees in feeder line	nos	5
total operating head loss	mwc	7.9
actual head of pump provided	mwc	15
quantity	nos	2 - 1 w + 1 sb
type of pump	horizontal centrifugal	
liquid handled	effluent with solids at ambient Temp.	
impeller type	non clog open impeller	
Langlier Index of liquid handled	near Zero. Near Neutral with slightly acidic nature	
wetted parts	MOC	C.I.
indicative power consumption	hp	2
Raw sewage transfer pump	**P 102 A/B**	
design criteria	liquid accumulation for 24 hours in tank T 100 will be pumped in 12 hours	
The pump takes the sewage accumulated in raw sewage collection tank and pumps it to combined waste water collection tank. Discharge to atmospheric pressure only.		
sewage generated by the Units	m3/d	56.25
design capacity taken	m3/d	70
hours of operation	hrs/d	12

pumping capacity provided	m3/hr	5.8
maximum vertical length of the feed pipeline (suction + discharge)	mts	8.2
number of valves on operation in the feeder line	nos	3
approx number of bends / tees in feeder line	nos	6
total operating head loss	mwc	11.2
actual head of pump provided	mwc	20
quantity	nos	2 - 1 w + 1 sb
pump type	horizontal centrifugal	
liquid handled	sewage with solids at ambient Temp.	
impeller type	non clog open impeller	
Langlier Index of liquid handled	Mildly positive LSI. Near neutral pH with slightly alkaline nature	
wetted parts	MOC	C.I.
indicative power consumption	hp	2
aeration tank feed pumps	**P 103 A/B**	
design criteria	feed flow rate and head	
The pump feeds the combined waste water to the aeration system. Feed discharged to atmospheric pressure only.		
combined waste water (effluent + sewage) for design	m3/d	134.95
design capacity taken	m3/d	170
hours of operation	hrs/d	20
pumping capacity provided	m3/hr	8.5
maximum vertical length of the feed pipeline (suction + discharge)	mts	5
number of valves on operation in the feeder line	nos	5
approx number of bends / tees in feeder line	nos	6

total operating head loss	mwc	8.2
actual head of pump provided	mwc	20
quantity	nos	2 - 1 w + 1 sb
pump type	horizontal centrifugal	
liquid handled	combined waste water with solids (TSS @ 500 ppm)at ambient Temp.	
impeller type	non clog open impeller	
Langlier Index of liquid handled	Mildly positive LSI. Near neutral pH with slightly alkaline nature	
wetted parts	MOC	C.I.
indicative power consumption	hp	2
return sludge pumps	**P 104 A/B**	
design criteria	recirculation rate	
Note: return sludge pumps will be kept by the side of the Secondary Clarifier (T104). Please see layout of Plant and Machinery.		
This will take the bottom settled liquid from the Secondary Clarifier and pump it back to the aeration tank. The pump will be FLOODED SUCTION and the total height of the secondary clarifier above the suction pipe of the pump will be about 3 mts with water and this positive load will be acting on the suction side.		
This pump will have two discharge headers. One will go to the Solids Holding Tank (T 114) and the other will go to the Aeration Tanks (T 103 A & B). Discharge to atmospheric pressure only.		
aeration process flow rate	m3/hr	8.5
re-circulation ratio	Q / Q'	0.7
re-circulation rate	m3/hr	5.95
pump capacity provided	m3/hr	6
maximum vertical length of the feed pipeline - only discharge side (flooded suction)	mts	5
number of valves on operation in the feeder line	nos	7
approx number of bends / tees in feeder line	nos	9
total operating head loss (including negation of head loss due to positive load on suction of about 3 mts)	mwc	9.6

actual head of pump provided	mwc	15
quantity	nos	2
type of pump	horizontal centrifugal	
liquid handled	water with solids (1.2% w/v)	
impeller type	non clog open impeller	
Langlier Index of liquid handled	Mildly positive LSI. Alkaline pH at around 7.5 to 7.7	
wetted parts	MOC	C.I.
indicative power consumption	hp	2
filter feed pumps	**P 105 A/B**	
design criteria	feed flow rate and pressure	
From the filter feed tanks, the water will be pumped to the sand filter and carbon filter, which are in series. The outlet of the carbon filter will be discharged into the UF feed tank,		
Both sand filter as well as carbon filter are pressure vessels and the system typically operates at a feed pressure of about 2 bar with an allowed total pressure drop of about 0.5 bar. Once this pressure drop is reached, the system is taken up for backwash.		
total water to be treated through filtration	m3 /day	170
hours of operation	hrs /d	20
feed flow rate for design	m3/hr	8.5
maximum vertical length of the feed pipeline	mts	5.5
number of valves on operation in the feeder line	nos	4 + 2 nos of multi port valves.
approx number of bends / tees in feeder line	nos	10
media height in each vessel	approx mts	1.4
total operating head loss	mwc	19.5
actual head of pump provided	mwc	30

Quantity		nos	2 - 1 op + 1 sb
type of pump		horizontal centrifugal	
Langlier Index of liquid handled		Mildly positive LSI. Alkaline pH	
wetted parts		MOC	C.I.
liquid handled		clear water	
impeller type		clear water pump, closed impeller	
indicative power consumption		hp	2
filter backwash pumps		**P 106 A/B**	
design criteria	2 times normal flow rate . Adequacy check through desired backwashing rate (m/hr)		
maximum area for backwashing for sand filter		m2	0.68
backwash rate		m3/hr / m2	28
Hence minimum capacity needed		m3 / h	19.04
design criteria on 2 times normal flow		m3 /h	17
chosen higher capacity of the two values above.			
capacity of pump provided		m3 /h	20
maximum vertical length of the feed pipeline		mts	6
number of valves on operation in the feeder line	nos	8 + 2 nos of multi port valves.	
approx number of bends / tees in feeder line		nos	8
media height in each vessel		approx mts	1.4
total operating head loss		mwc	14.5
actual head of pump provided		mwc	25
quantity		nos	2 - 1 op + 1 sb
type of pump		horizontal centrifugal	
Langlier Index of liquid handled		Mildly positive LSI. Alkaline pH	
wetted parts		MOC	C.I.
liquid handled		clear water	
impeller type		clear water pump, closed impeller	
indicative power consumption		hp	2

U.F. feed pumps	**P 107 A/B**	
design criteria	feed flow rate and pressure	
After sand and carbon filtration and disinfection, the water is pumped to the Ultra Filtration Units, through a bag filter.		
The UF system is a "low pressure membrane separation" system. Typical feed pressure is around 2 bar and allowed reject pressure is about 1.5 bar.		
Pressure drop across bag filter is about 0.5 bar. Hence, total pressure drop of the system is 1 bar		
Two parallel UF systems are provided, each capable of handling 100% load i.e. 170 KLD. Two pumps are provided with common header so that any pump can operate any stream.		
total water to be treated through filtration	m3 /day	170
hours of operation	hrs /d	20
feed flow rate for design	m3/hr	8.5
maximum vertical length of the feed pipeline	mts	5.4
total operating head loss - bag filter + ultra filter + valves + bends + tees etc..	mwc	18.5
actual head of pump provided	mwc	25
quantity	nos	2 - 1 op + 1 sb
type of pump	horizontal centrifugal	
Langlier Index of liquid handled	Mildly positive LSI. Alkaline pH	
wetted parts	MOC	C.I.
liquid handled	clear water	
impeller type	clear water pump, closed impeller	
indicative power consumption	hp	2

U.F. backwash pumps		**P 108 A/B**	
design criteria	manufacturer recommendation on backwash flow rate at 1.5 bar pressure		
UF system is backwashed once in about 45 minutes for about 45 seconds. The sequence of backwash followed by rinse is controlled through a P.L.C. system.			
The backwash system is chosen in such a way that 100% of load is backwashed in one sequence. Thus, one stream gets backwashed at a time. It is to be noted that, at 100% load, only one stream will be operational and the other will be a 100% standby.			
backwash rate for design		m3/hr	16.5
pump head recommended for backwash		mwc	20
actual head of pump provided		mwc	25
quantity		nos	2 - 1 op + 1 sb
type of pump		horizontal centrifugal	
Langlier Index of liquid handled		Mildly positive LSI. Alkaline pH	
wetted parts		MOC	C.I.
liquid handled		clear water	
impeller type		clear water pump, closed impeller	
indicative power consumption		hp	2
U.F. CIP pumps		**P 109 A/B**	
design criteria	manufacturer recommendation on CIP system flow rate at 1.5 bar pressure		
CIP system is provided for daily flushing of the UF membrane with permeate water to "wash away" any settled impurity. CIP wash is treated as a "rinse" wash and hence low flow rates are recommended for the same, to prevent "bulking" of membranes. CIP is also provided for cleaning the membrane in case of any problems / fouling			
CIP flushrate for design		m3/hr	5
actual head of pump provided		mwc	25
quantity		nos	2 - 1 op + 1 sb
type of pump		horizontal centrifugal	
Langlier Index of liquid handled	varying LSI. pH will range from 2.0 to 12.0 for cleaning chemicals		
wetted parts		MOC	S.S

liquid handled	clear water	
impeller type	clear water pump, closed impeller	
indicative power consumption	hp	1
R.O Stage 1 feed booster pumps	**P 110 A/B**	
design criteria	feed flow rate and pressure	
From the U.F. treated water tank, the water is to be pumped to the R.O. membrane through the high pressure pump. The HPP needs positive suction pressure to enable pressure buildup in the discharge. In addition, the feed water has to pass through Micron Filter which acts as a protection to the R.O. membrane.		
Hence, this pump is provided to take water from the UF treated water tank, pump it through the micron filter and deliver the water to the suction head of the high pressure pump		
total water to be treated	m3 /day	170
hours of operation	hrs /d	20
feed flow rate for design	m3/hr	8.5
maximum vertical length of the feed pipeline	mts	5
number of valves on operation in the feeder line	nos	6
head loss across micron filter	mwc	7
total operating head loss	mwc	14.5
actual head of pump provided	mwc	20
quantity	nos	2 - 1 op + 1 sb
type of pump	horizontal centrifugal	
Langlier Index of liquid handled	Mildly positive LSI. Alkaline pH	
wetted parts	MOC	C.I.
liquid handled	clear water	
impeller type	clear water pump, closed impeller	
indicative power consumption	hp	1.5

R.O. stage 1 high pressure pumps	**P 111 A/B**	
design criteria	feed flow rate and pressure	
The pressure of the high pressure pump is determined by the osmotic pressure of the feed water and the operating flux of the system. Higher the TDS, higher the pressure and higher the flux, higher the pressure.		
The TDS of the feed water is around 6200 ppm and the operating flux is kept way below the manufacturer's recommended maximum. The flux is around 12 GFD whearas the manufacturer' srecommended maximum is around 15 GFD.		
This safe design results in lesser pressure requirements and subsequently smoother operation of the R.O. process. The design pressure is based on this factor.		
process water capacity	m3 /day	170
hours of operation	hrs /d	20
feed flow rate for design	m3/hr	8.5
recommended pressure at maximum drop	bar	11.75
actual head of pump provided	bar	15
quantity	nos	2 - 1 op + 1 sb
type of pump	vertical centrifugal	
Langlier Index of liquid handled	acidic pH around 6.5 to 7.0	
wetted parts	MOC	S.S.
liquid handled	clear water	
indicative power consumption	hp	7.5
R.O Stage 2 feed booster pumps	**P 112 A/B**	
design criteria	feed flow rate and pressure	
The stage 1 rejects (from both streams i.e. 2 x 170 KLD streams are collected in a tank. From here, it is pumped to stage 2 membranes through a high pressure pump. Before this, the water passes through micron filter to protect the membrane.		
Hence, this pump is provided to take water from the R.O. stage 1 reject tank, pump it through the micron filter and deliver the water to the suction head of the high pressure pump		

total water as feed (assuming that both streams of stage 1 i.e. 170 KLD x 2 streams, are operational at the same time…)	m3 /day	120
hours of operation	hrs /d	20
feed flow rate for design	m3/hr	6
maximum vertical length of the feed pipeline	mts	5
number of valves on operation in the feeder line	nos	6
head loss across micron filter	mwc	7
total operating head loss	mwc	14.5
actual head of pump provided	mwc	20
quantity	nos	2 - 1 op + 1 sb
type of pump	horizontal centrifugal	
Langlier Index of liquid handled	mildly acidic. LSI around zero to mildly negative.	
wetted parts	MOC	C.I.
liquid handled	clear water	
impeller type	clear water pump, closed impeller	
indicative power consumption	hp	1.5
R.O. stage 2 high pressure pumps	**P 113 A/B**	
design criteria	feed flow rate and pressure	
The pressure of the high pressure pump is determined by the osmotic pressure of the feed water and the operating flux of the system. Higher the TDS, higher the pressure and higher the flux, higher the pressure.		
The TDS of the feed water is around 1400 ppm and the operating flux is kept way below the manufacturer's recommended maximum. The flux is around 10 GFD whearas the manufacturer' srecommended maximum is around 13 GFD.		
This safe design results in lesser pressure requirements and subsequently smoother operation of the R.O. process. The design pressure is based on this factor.		
process water capacity	m3 /day	120
hours of operation	hrs /d	20
feed flow rate for design	m3/hr	6

recommended pressure at maximum drop	bar	21.25
actual head of pump provided	bar	25
quantity	nos	2 - 1 op + 1 sb
type of pump	vertical centrifugal	
Langlier Index of liquid handled	acidic pH around 6.5 to 7.0	
wetted parts	MOC	S.S.
liquid handled	clear water	
indicative power consumption	hp	10
R.O. CIP pumps	**P 114 A/B**	
design criteria	no. of pressure vessels cleaned in sequence. Flow / pressure vessel	
CIP pump is used for periodic flushing of the membrane with permeate on a daily basis. In addition, preventive chemical cleaning also gets done through this pump. When under problems due to fouling, scaling, deposits etc.., the membranes are cleaned using this pump. Pressure is not a design criteria as flow, as the cleanign solution will be under re-circulation most of the times, in a closed loop system.		
No. of vessels cleaned in one sequence	nos	1.0
Flow / pressure vessel for cleaning	gpm	25.0
	m3/hr	5.7
minimum CIP pump flow rate required	m3/hr	6.0
actual CIP pump capacity provided	m3/hr	8.0
head	mwc	25.0
quantity	nos	2 -1 w + sb
type of pump	horizontal centrifugal	
Langlier Index of liquid handled	highly varying, from 2 pH to 12 pH	
wetted parts	MOC	S.S.
liquid handled	clear water	
indicative power consumption	hp	1.5

B/wash waste tube settler feed pumps		**P 115 A/B**	
design criteria	total accumulation of waste water in backwash waste tank and flow to tube settler.		
The backwash waste is processed through the tube settler. For this, the collected backwash waste is pumped to the tube settler through this pump.			
total backwash waste generated by the process		m3/day	28.0
volume of the hold up sump		m3	33.0
process flow rate to tube settler		lph	2000.0
feed flow rate for design		m3/hr	2.0
head		mwc	20.0
quantity		nos	2 - 1 w + 1 sb
liquid handled		water with solids.	
type of pump		horizontal centrifugal, open impeller	
wetted parts		MOC	C.I.
indicative power consumption		hp	1.0
filter press feed pumps		**P 116 A/B**	
design criteria	total solids to be processed for dewatering		
the capacity of the pump depends on the total quantity to be processed, total number of parallel units of filter press, down time considered for filter press cake removal and pressure of the process system.			
total quantity to be processed for dewatering (for 1 plant operation at 170 KLD)		m3/day	29.4
hours of operation of filter press		hrs /day	16.0
feed flow rate through filter press		m3 /hr	1.8
capacity of the pump provided		m3/hr	2.0
working pressure		bar	5.0
quantity		nos	2 - 1 op + 1 sb
liquid handled		water with 1.5% solids	
type of pump		screw pumps / reciprocating plunger	
wetted parts		MOC	S.S
indicative power consumption		hp	3.0

pH correction dosing tank		**DT 101**	
design basis		dosage (ppm)	
The feed pH of the raw effluent is bound to be mildly acidic. To improve the pH, the alkali dosing system is provided herein. The pH will be stablized around 7.0 ppm before introducing the waste water to Primary Treatment.			
total effluent to be treated		KLD	100
dosage		ppm	15
quantity		kgs/d	1.5
dosage strength		% w / v	10
specific gravity of solution		index	1.05
approx quantity of dosage / day		lpd	14.29
dosing tank volume provided		liters	100
quantity		nos	1
dosing tank material		MOC	LLDPE / PP
pH correction dosing pump		**DP 101**	
total dosing volume		lpd	14.29
dosing flow rate needed min…		lph	0.714
capacity provided		lph	0 - 6
type of pump		electronic metering	
discharge point	Into effluent collection tank, at atmospheric pressure		
operating pressure		KSC	1.5 to 2.0
quantity		nos	1
alum dosing tank		**DT 102**	
design basis		dosage (ppm)	
alum is dosed to initiate the process of electrolytic degradation of the complex organics through the primary bond depolarization. Alum does the preliminary depolarization through negative charge destabilization thus significantly loosening up the complex organic structure for subsequent destruction through electrolysis.			
total effluent to be treated		KLD	100
dosage		ppm	40
quantity		kgs/d	4
dosage strength		% w / v	10
specific gravity of solution		index	1.02

approx quantity of dosage / day		lpd	39.22
dosing tank volume provided		liters	100
quantity		nos	1
dosing tank material		MOC	LLDPE / PP
alum dosing pump		**DP 102**	
total dosing volume		lpd	100
dosing pump flow rate minimum		lph	1.961
capacity provided		lph	0 - 6
type of pump		electronic metering	
discharge point	on line in the feeder to ER 101 A/B - Electro Reactors.		
process line pressure		KSC	1.2 to 1.5
pump operating pressure		KSC	2
quantity		nos	1
hypo dosing tank		**DT 103**	
design basis		dosage (ppm)	
The water after secondary biological treatment is collected in a tank and disinfection is done through addition of hypochlorite solution.			
Sodium Hypo Chlorite produces hypochlorous acid (HOCL) which is the active disinfectant. This is an oxidizing biocide which kills micro organisms through cell wall destruction mode. Before that, the reducing compounds in the waste water consumes the oxidation compound, thus creating a "chlorine demand". Break Point Chlorination (BPC) is achieved on further addition - meaning which the usage of the oxidation potential has been exhausted and any dosage beyond BPC will result in FRC.			
The key pointer is the maintenance of F.R.C. (free residual chlorine) of 0.1 to 0.2 ppm in the water after chlorination.			
NaOCl is available in solution form which provides about 8 to 15 % of active oxidation potential. Typically, for the waste water after electrolytic treatment and the combined water after biological treatment, this BPC is reached at around 7 to 9.5 ppm. To compensate for available oxidation potential, a higher dosage of the solution is provided.			
total effluent to be treated		KLD	170
dosage		ppm	50
quantity		kgs/d	8.5
dosage strength		% w / v	10
specific gravity of solution		index	1.02
approx quantity of dosage / day		lpd	83.3
dosing tank volume provided		liters	200
quantity		nos	1

dosing tank material	MOC	LLDPE / PP
hypo dosing pump	**DP 103**	
total dosing volume	lpd	83.3
dosing flow rate needed min…	lph	4.2
capacity provided	lph	0 - 10
type of pump	electronic metering	
discharge point	Into tank, at atmospheric pressure	
operating pressure	KSC	1.5 to 2.0
UF alum dosing tank	**DT 104**	
design basis	dosage (ppm)	
The filtered water is to be processed through ultra filtration system. On line, polishing alum dosing is done to facilitate better entrapment of silt and fines in the surface of the membrane.		
The UF module is of P.E./P.E.S/PVDF fibre which is highly compatable with orthokinetic pin flocs formed on coagulation of silt and fines with alum dosage. It has been found in practice, that, employing small quantities of alum on line, significantly improves the performance of the UF membrane and more importantly, in easier removal of the settled material from the membrane fibre at the time of backwashing.		
total effluent to be treated	KLD	170
dosage	ppm	10
quantity	kgs/d	1.7
dosage strength	% w / v	10
specific gravity of solution	index	1.02
approx quantity of dosage / day	lpd	16.7
dosing tank volume provided	liters	100
quantity	nos	1
dosing tank material	MOC	LLDPE / PP
UF alum dosing pump	**DP 104**	
total dosing volume	lpd	16.7
dosing flow rate needed min…	lph	0.8
capacity provided	lph	0 - 6
type of pump	electronic metering	

discharge point	on line, in the feeder to UF before bag filter. Line pressure at around 1.5 to 2.0 bar.		
operating pressure		KSC	2.5 to 3.0
Stage 1 R.O. SMBS dosing tank		**DT 105**	
design basis		dosage (ppm)	
SMBS is employed after carbon filter. Sodium Meta Bi Sulphite is primarily a reducing agent that has the potential to capture oxidation compound in the water. We are dosing chlorine before UF. Some of the residual chlorine may pass through and there is a minor possibility that some of the same may reach the R.O. membrane. The R.O membrane needs to be protected against oxidation compounds.			
The activated carbon filter acts as a first level protection followed by bag filter, UF etc.. However, to ensure and safe guard the membrane, SMBS dosing is provided. The dosage is calculated based on the stoichoimetric equivalent of one mole of sulphite required to convert itself to sulphate through capture of oxidation potential. Additional dosage is added to convert the equation to practical limitations including purity, reaction time, dosage concentration, other competing dynamics etc..			
total effluent to be treated		KLD	170
dosage		ppm	35
quantity		kgs/d	5.95
dosage strength		% w / v	10
specific gravity of solution		index	1.05
approx quantity of dosage / day		lpd	56.7
dosing tank volume provided		liters	100
quantity		nos	1
dosing tank material		MOC	LLDPE / PP
Stage 1 R.O. SMBS dosing pump		**DP 105**	
total dosing volume		lpd	56.7
dosing flow rate needed min…		lph	2.8
capacity provided		lph	0 - 10
type of pump		electronic metering	
discharge point	on line, in the feeder to Micron Filter before R.O. Line pressure around 1.5 KSC		
operating pressure		KSC	2.5 to 3.0

Stage 1 antiscalant dosing tank	**DT 106**	
design basis	dosage (ppm)	
Anti scalant is dosed in the R.O. feed to counter the scaling potential of the feed water contaminants inside the R.O. membrane. As the permeate is generated in transverse direction to feed, there always exists a possibility that scaling of sparingly soluble salts may occur on the surface of the R.O. membrane. Scaling will affect the efficiency and the effectiveness of the entire process and may result in membrane damage.		
Scale control is achieved in the process through a multi step approach. The primary approach is designing the R.O. with low flux to shift the Concentration Potential or the Beta Factor of the water to the left of 1.2 Secondary step is in ensuring that pH does not become too alkaline (i.e. > 7.2). The protection mode is the anti scalant dosage.		
total effluent to be treated	KLD	170
dosage	ppm	3
quantity	kgs/d	0.51
dosage strength	% w / v	10
specific gravity of solution	index	1.05
approx quantity of dosage / day	lpd	4.9
dosing tank volume provided	liters	100
quantity	nos	1
dosing tank material	MOC	LLDPE / PP
Stage 1 antiscalant dosing pump	**DP 106**	
total dosing volume	lpd	4.9
dosing flow rate needed min…	lph	0.2
capacity provided	lph	0 - 3
type of pump	electronic metering	
discharge point	on line, in the feeder to Micron Filter before R.O. Line pressure around 1.5 KSC	
operating pressure	KSC	2.5 to 3.0
Stage 2 pH booster dosing tank	**DT 107**	
design basis	dosage (ppm)	

The reject from stage1 is the feed to stage 2. In R.O. process, pH destablization will occur to a certain extent. Normally, the permeate will carry the low pH and the dissolved carbon di oxide constituent. The reject normally reports at neutral. However, the concentration of other impurity would have significantly increased. Thus, the scaling potential of the second stage is much more than the first stage.		
Anti scalant dosing is also given as one line from the stage 1 dosing system. But, pH control is important to shift the Langlier Index to negative. pH control will ensure that the scaling potential of the water is significantly reduced. The effluent, in spite of all treatment, would contain some complex compounds for which no anti scalant may work. In such situations, pH control is the key to ensure scale free R.O. process in stage 2. Dilute Hydro Chloric Acid is used for pH control . HCL is easily miscible and has the potential to vary the hydrogen ion concentration instantaneously, thus reducing pH immediately. Sulphuric acid is not used as the potential for gypsum scale will be created on excess sulphate concentrations.		
total reject (at both stages operation)	KLD	120
acid dosage for pH correction	ppm	10
quantity	kgs/d	1.2
dosage strength	% w / v	5
specific gravity of solution	index	1.01
approx quantity of dosage / day	lpd	23.8
dosing tank volume provided	liters	100
quantity	nos	1
dosing tank material	MOC	LLDPE / PP
Stage 2 pH booster dosing pump	**DP 107**	
total dosing volume	lpd	23.8
dosing flow rate needed min…	lph	1.2
capacity provided	lph	0 - 6
type of pump	electronic metering	
discharge point	on line, in the feeder to Micron Filter before R.O. Line pressure around 1.5 KSC	
operating pressure	KSC	2.5 to 3.0
R.O. permeate dosing tank	**DT 108**	
design basis	dosage (ppm)	

The R.O. permeate is bound to have a low pH due to the process. This needs to be made into neutral pH in the range 6.5 to 7.5 so that re-use is possible. To achieve this, dosing has to be given in the permeate tank			
Caustic dosing is provided in the permeate tank to regulate the pH. The water is bound to be aggressive (due to its low TDS and low alkalinity values) and hence a minor dosage would be enough to correct it to neutral. It is to be noted that the pH is not to go beyond 7.5 and hence the regulation dosage is calculated at the above range only.			
total permeate from all stages, all phases		KLD	170.0
acid dosage for pH correction		ppm	12
quantity		kgs/d	2.04
dosage strength		% w / v	10
specific gravity of solution		index	1.01
approx quantity of dosage / day		lpd	20.2
dosing tank volume provided		liters	100
quantity		nos	1
dosing tank material		MOC	LLDPE / PP
R.O. permeate dosing pump		**DP 108**	
total dosing volume		lpd	20.2
dosing flow rate needed min…		lph	1.0
capacity provided		lph	0 - 6
type of pump		electronic metering	
discharge point	dosing to tank at atmospheric pressure		
operating pressure		KSC	1.5 to 2.0

ELECTRO CELL REACTOR ER 101 A/B

Detailed description of the process is given in the process description section of the DPR.

Design capacity	170 KLD
No of plants in parallel	2 nos
Total capacity of plant to treat waste water	340 KLD
Design feed flow rate / stream	8.5 m3/hr
Overall size of the electro cell reactor	Width : 3m Length : 8m Height: 0.75 m
Anode specifications	Material : aluminum Size of one electrode : 0.4 m x 0.4m Thickness of one electrode : 5 mm
cathode specifications	Material : aluminum
Applied Driving Force	Electric current
Typical operating amperage	60 to 120 amps
Typical operating voltage	10 to 30 v
Skimmer	Reduction gear assembly with vertical MS shaft
Skimming ends	Neoprene / FRP flaps

AERATION PROCESS - Basic Design Data Sheets:

Extended Aeration Process is employed for BOD degradation. The values of BOD removal are as given below:	
BOD value effluent before primary treatment (ppm)	1900
BOD removed in primary treatment (ppm)	1235
BOD to Biological Process contributed by Effluent (ppm)	665
total effluent inlet to plant (m3 / day)	100
BOD load to Biological Process Contributed by Effluent (kgs /day)	66.5
BOD value of raw sewage (ppm)	225
BOD removed by enzymatic remediation in collection tank (ppm)	25
BOD to biological process contributed by sewage (ppm)	200
total sewage inlet to the plant (m3/day)	70
BOD load to Biological Process Contributed by Sewage (kgs/day)	14
Total BOD inlet to the Aeration Process (kgs / day) effluent + sewage	80.5
total waste water for treatment (m3 / day)	170
hence Design Inlet BOD for biological treatment (ppm)	473.5
Design BOD inlet for aeration process (ppm)	500.0
Typical design parameters for extended aeration:	
Food to Micro Organisms ratio	0.15 to 0.25
hydraulic retention time (minimum) hours	16 - 20
MLVSS in the tank (ppm)	2500 - 3000
endogenous decay coefficient (kd value day inverse)	0.06
cell residence time desired (days)	> 20
Yield co-efficient (Y)	0.5

Calculation of Volume:	
volume based on this F/M ratio (m3)= [{Q *So} / {X * F/m}]	189.4
hydraulic retention time for this volume (hrs)	22.3
Thus, HRT criteria is satisfied…	
Volume based on Theta C (Cell Residence Time)	152
({ Theta C * Q * Y * [So - S] } / { X * [1 + Kd*Theta C] })	
Thus, Cell Residence Time criteria is satisfied…	
actual size of the tank provided in the design: 10.0 m x 7.3 m x 3.0m SWD + 0.5m FB	
actual volume of liquid hold up provided in the design (m3)	219.0
Calculation of Oxygen Requirement:	
Kgs of Oxygen required / Kg of BOD destroyed / day	1.5
value considered for design: (kgs Oxygen demand / kg BOD / day)	2
actual BOD destroyed in the Process (Kgs / day)	80.5
Hence oxygen demand for the system (kgs / day)	161
Aspirating Aeration is provided for the system.	
oxygen disbursement / 5 HP aspirating aerator (kgs / day)	200
Number of aeration system required	1
Provided; One (1) number 5 Hp aspirating aeration STORMIX / equivalent system is sufficient	

SAND FILTRATION AND CARBON FILTRATION – Basic Design Data Sheets

Sand Filter	**SF 101 A / B**	
design basis	filtration rate.	
Sand Filter is a surface filtration process. Hence, filtration rate is the criteria for sizing the unit. Depending on the nature of the feed water, the rate is bound to vary. Operating at lesser filtration rate would mean bigger vessel and more cost, but in turn, will increase the efficiency of the filtration process as the surface area for filtration for a given feed flow rate will be enhanced.		
Two sand filters are provided in parallel. Each Filter is capable of taking maximum feed load i.e. 170 KLD. This redudancy helps in running parallel operations even if one filter is found to have problems and hence needs maintenance down time.		
three to four media types are provided inside the pressure vessel. Gravel from the bottom, pebble on top of it, coarse sand on top of the pebble layer and fine sand at the very top. Flow is processed from TOP to BOTTOM. Being surface filtration, only the top layer acts as a filter and the remaining media is only "supporting structure"		
another design factor is the "dirt holding capacity" of the filter. The quantity of contaminant a filter element can trap and hold before the maximum allowable back pressure or delta P level is reached. This varies from 3 to 6 kgs of TSS load / sq.m. of the filtration area. In this design, as the filtration rate is taken very low, the DHC of the filter bed will be extremely good i.e. the clogging of filters will be extremely rare.		
design plant capacity / filter	m3/d	170
feed flow rate for design	m3/hr	8.5
filtration rate considered	m3/h/ m2	12.5
area required for filtration	m2	0.68
internal diameter requried	in mts	0.931
	in inches	36.6
vessel type	FRP pressure vessel	
Model of filter provided	model	4072
diameter of the vessel provided	in inches	40
height of the vessel provided	in inches	72
	in mts	1.8288
approx media heights:		
bottom : gravel	mm	200 - 250
next : pebble	mm	225 - 250
next : coarse sand	mm	150 - 230
top layer : fine sand	mm	150 - 250
total media height	mm	725 - 825
inlet arrangement	type	header with lateral distributor

outlet arrangement	type	collectors with box outlet
process control valve	type	multiport valve
dirt holding capacity	kgs SS / m2	3 to 6
T.S.S. load to the filter @ 100 ppm inlet TSS after biological treatment	Kgs /day	17
hence minimum area required	m2	0.18
actual area provided is much more than this… Hence, dirt holding capacity criteria is satisfied.		
NOTE: The parameters of sand (uniformity coefficient and other factors)will be as per GEP and as per guidelines prescribed by CPHEEO manual on water treatment		
Carbon Filter	**CF 101 A / B**	
design basis	filtration rate.	
carbon filter is an adsoption process for trapping the trace organics, color, trace gases in the filtered water by passing it through the bed of activated carbon.		
Two carbon filters are provided in parallel. Each Filter is capable of taking maximum feed load i.e. 170 KLD. This redudancy helps in running parallel operations even if one filter is found to have problems and hence needs maintenance down time.		
carbon filters are operated at slightly higher surface filtration rates than sand filter. However, the design has been done with conserative values to ensure maximum effectiveness of the filter operations.		
design plant capacity / filter	m3/d	170
feed flow rate for design	m3/hr	8.5
filtration rate considered	m3/h/ m2	15
area required for filtration	m2	0.567
internal diameter requried	in mts	0.850
	in inches	33.4
vessel type	FRP pressure vessel	
Model of filter provided	model	3672
diameter of the vessel provided	in inches	36
height of the vessel provided	in inches	72
	in mts	1.8288
media	activated carbon with I.V. > 900	
valve type	multiport valve	
NOTE: The parameters of carbon will be as per GEP and as per guidelines prescribed by CPHEEO manual on water treatment		

BAG FILTER AND ULTRA FILTRATION SYSTEM – Basic Design Sheets

Bag Filter	**BF 101 A/B**	
design basis	flow / bag	
Bag filter is a surface filtration. Each unit area of the bag acts as a filter. Bag filters have the capability to process large volumes of liquid per unit area as compared with the micron filters. Bag filters are normally used before "protecting systems" i.e. typically before Ultra Filter and before Nano Filters.		
In this system, two bag filters are provided in parallel, each having a capacity to treat 8.5 m3/hr i.e. 170 KLD of feed flow rate. Each can be operated independently and jointly also (if so desired)		
feed flow rate for design	m3/hr	8.5
flow per 33" x 7" bag size	m3/hr	15.0
hence no. of bags required	nos	1.0
micron rating of bag	nominal	20.0
bag material	MOC	P.P.
housing	moc	SS
number of bag filters	nos	2.0

Ultra Filter	**UF 101 A/B**
design basis	flux
Ultra Filtration operates on molecular weight cut off (MWCO). The MWCO of the chosen UF modules is between 100 to 120 KD. The primary purpose of the UF system is to protect the R.O. membranes against turbidity and silt build up and also to remove large size micro biological contaminants and organic molecules, thus providing protection to the R.O. membranes against possible organic fouling	
Flux plays an important role in the efficiency of the process. Flux is the (flow / unit area of membrane / unit time).. Flux is always determined on permeate flow for membrane separation systems such as UF, NF & HF(hyper filtration, commonly referred as R.O. process). Higher flux for a given flow rate would mean lesser area requirement and thus lesser membranes and lesser capital investment. But, this will increase the fouling potential of the membrane and increae the cleaning frequency and the usage of cleaning chemicals...	

There are two parallel plants in this system, each having a capacity to treat 170 KLD @ 8.5 m3/hr. The main process of Inlet, Outlet, Backwash Inlet, B/w outlet and rinse is controlled through P.L.C. The flux is designed on a very conservative basis to ensure maximum effectiveness of removal of contaminants with significantly reduced fouling potential.		
feed flow rate for design / stream	m3/hr	8.5
UF module rating	MWCO	100 - 120 KD
UF module type	hollow fine fibre	
UF process type	Cross Flow , vertical mounted	
UF membrane material	PES / PE / PVDF	
UF module material	PE / PP	
design operating flux	GFD	40.0
expected recovery	%	90.0
typical membrane surface area of UF module	sq.ft	643.2
product recovery per membrane	liters / hour	4057.5
	m3/hr	4.1
actual number of membranes needed	nos	1.9
number of membranes provided	nos	3.0
UF permeate	m3/hr	7.7
UF reject	m3/hr	0.9
total number of UF modules for parallel streams	nos	6.0

MICRON FILTERS – Basic Design Sheets

MICRON FILTERS:	MF 101, 102, 103 & 104
design basis	flow / 10" cartridge length
Micron Filter is depth filtration. The cartridges are SPUN type with central core. Feed enters from outside, proceeds across the thickness of the cartridges and collects in the central product pipe and is sent out. The design criteria is the amount of water processed through one 10" cartridge length. The cartridges come in standard sizes of 10, 20, 30 & 40 inches length and are housed in SS housing fitted with pressure gauge.	
Too high a flow rate would mean much faster choking and more replacement frequency, but will reduce the initial installation cost. This design has adopted the manufacturer's recommendation on the minimum flow rate that can be taken through a 10" cartridge for a feed water which has been treated through sand and carbon filtration.	

In this plant, micron filters are placed in the following locations: (a) In the Ultra Filter Plant, the Micron Filter is kept at the discharge of the C.I.P. system pump. The chemicals used in the CIP system may carry some impurity and this is trapped through the micron filter. (b) In the R.O. plant, the Micron Filter is kept before the high pressure pump to protect the R.O. membrane (c) In the same R.O. plant, in stage 2 this is kept before stage 2 high pressure pump and (d) micron filter is kept in the CIP system of the R.O. plant for the same reason as it is kept for the UF CIP system.

UF CIP Micron Filter	**MF 101**	
feed flow rate for design	m3/hr	5.0
flow / 10" cartridge recommended	m3/hr	1.0
flow / 10" cartridge considered	m3/hr	0.8
hence number of 10" cartridges needed	nos	6.7
total length needed for micron filtration	inches	66.7
cartridge length provided	inches	40.0
number of cartridges provided	nos	2.0
actual cartridge length provided	inches	80.0
micron rating	nominal	25.0
cartridge material	MOC	P.P.
housing	moc	SS
R.O Stage 1 Micron Filter	**MF 102**	
one micron filter to feed both streams i.e. designed for total flow of 8.5 m3/hr x 2 = 17 m3/hr		
feed flow rate for design	m3/hr	17.0
flow / 10" cartridge recommended	m3/hr	1.15
flow / 10" cartridge considered	m3/hr	1.1
hence number of 10" cartridges needed	nos	15.5
total length needed for micron filtration	inches	154.5
cartridge length provided	inches	40.0
number of cartridges provided	nos	4.0
actual cartridge length provided	inches	160.0
micron rating	nominal	10.0
cartridge material	MOC	P.P.
housing	moc	SS
cartridge material	MOC	P.P.
housing	moc	SS

R.O Stage 2 Micron Filter	**MF 103**	
feed flow rate for design	m3/hr	6.0
flow / 10" cartridge recommended	m3/hr	1.15
flow / 10" cartridge considered	m3/hr	1.0
hence number of 10" cartridges needed	nos	6.0
total length needed for micron filtration	inches	60.0
cartridge length provided	inches	30.0
number of cartridges provided	nos	2.0
actual cartridge length provided	inches	60.0
micron rating	nominal	10.0
cartridge material	MOC	P.P.
housing	moc	SS
R.O CIP Micron Filter	**MF 104**	
CIP system feed flow rate	m3/hr	8.0
flow / 10" cartridge recommended	m3/hr	1.00
flow / 10" cartridge considered	m3/hr	0.9
hence number of 10" cartridges needed	nos	8.9
total length needed for micron filtration	inches	88.9
cartridge length provided	inches	30.0
number of cartridges provided	nos	3.0
actual cartridge length provided	inches	90.0
micron rating	nominal	25.0
cartridge material	MOC	P.P.
housing	moc	SS

R.O. PROCESS – Basic Design Sheets

Process will have TWO STAGES. The reject from first stage will be the feed to the next stage.
Stage 1 will have TWO PARALLEL PLANTS, each of 8.5 m3/hr (170 KLD) feed water flow rate.
Stage 2 will have ONE PLANT of 6 m3/hr (120 KLD) feed water flow rate, to receive the reject from BOTH the parallel streams.

Stage 1		
R.O. feed flow rate for design	m3/hr	8.5
	m3 /day	170.0
recovery of stage 1	%	65.0
permeate from stage 1	m3/hr	5.5
	m3 /day	110.5
reject from stage 1	m3/hr	3.0
	m3 /day	59.5

Now, Stage 2 is designed for reject of 3 m3/hr x 2 stream = 6 m3/hr (i.e. assuming that both the streams in stage 1 are under operation at a time… If only one stream of stage 1 is under operation, then this stage 2 will be run for only 10 hours instead of the design of 20 hours.

Stage 2		
feed flow rate	m3/hr	6.0
recovery of stage 2	%	50.0
permeate from stage 2	m3/hr	3.0
reject from stage 2	m3/hr	3.0

TOTAL QUANTITY OF PRODUCT (in KLD) FOR ONE STREAM OF 170 KLD	140.25
TOTAL REJECT (in KLD) FOR ONE STREAM OF 170 KLD BEING OPERATIONAL	29.75

DESIGN OF MEMBRANES		
stage 1 (2 parallel plants, each of 8.5 m3/hr feed capacity)		
design basis	flux	
There are several factors that needs to be considered when designing a R.O. system. TDS of the feed water, required recovery, the Langlier Index of the feed water, fouling potential, beta factor etc.. However, the core factor is the FLUX i.e. how much product that we are going to recovery / area / time from one membrane.		
It is to be noted that the water quality and pressure and the recovery are all interlinked. The common thread running through all these is the FLUX. Higher the flux means more recovery per membrane. This means that we will have lesser membranes and hence lesser capital investment. But, higher flux would increase the scaling potential of the water as it passes through the membrane pressure vessel and will significantly increase the beta factor i.e. the possibility of concentration polarization of sparingly soluble salts on the membrane surface.		
In this design, FLUX is considered as more of a technical factor rather than a commercial factor. The manufacturer's recommendation on general conditions of pre treatment and raw water characteristics has been taken into account. But the actual flux has been worked out at a lesser value than this. This plant deals with effluent. It means that, there is a significant possibility of finding complex compounds in the waste water. Under normal conditions, these would not affect the treatment in any way. But, when concentrated through two stages, their behaviour is bound to change and affect the performance. Hence, suitable allowance is provided for the same.		
recommended maximum flux for UF pre treated R.O. feed water	GFD	15
Design Flux in stage 1 (after U.F.)	GFD	12.0
active surface area of one 8"dia x 40" long brackish water membrane as given by the manufacturer	sq.ft.	375 - 400
surface area considered for design	sq.ft.	375
permeate flow / membrane for above flux and surface area	liters / hour	709.7
	m3 /hour	0.7
total permeate flow of stage 1 @ 8.5 m3/hr feed flow	m3 /hour	5.5
Hence, number of membranes needed as per design	nos	7.8
Actual number of membranes provided	nos	12.0

Note: In addition to taking a lower flux and taking a lower permeate flow / membrane, the system has incorporated additional membranes i.e. from 8 nos, the system has been loaded by 50% more. While this may increase the initial cost, the performance and the effectiveness of the system will be sustained for a far longer period, cleaning frequency will reduce significantly and most importantly, the permeate TDS will remain stabilized at low operating pressures.

design configuration of stage 1	
Stage 1 vessel 1	6 nos of 8" x 40"
Stage 1 vessel 2	6 nos of 8" x 40"
membrane size	8" dia x 40" long
membrane manufactured configuration	spiral wound polyamide
membrane type	Brackish Water

stage 2

Stage 2 receives the reject of stage 1. Hence, more salinity and impurity concentration will be fed through the membranes in stage 2. Here, the flux is still LESSER than that of Stage 1, as the possibility of high beta factor is more significant. The membrane provided is also sea water membrane having capability of withstanding high pressures and of TDS up to 40,000 mg / l in the feed... Recovery of the system has also been kept much lesser - at only 50% to sustain the production and to prevent membrane loss.

recommended maximum flux for stage 2 process	GFD	12
Design Flux in stage 1 (after U.F.)	GFD	10.0
active surface area of one 8"dia x 40" long brackish water membrane as given by the manufacturer	sq.ft.	330 - 375
surface area considered for design	sq.ft.	350
permeate flow / membrane for above flux and surface area	liters / hour	552.0
	m3 /hour	0.55
total permeate flow of stage 2 @ 6 m3/hr feed flow	m3 /hour	3.0
Hence, number of membranes needed as per design	nos	5.4
Actual number of membranes provided	nos	8.0

design configuration of stage 2	
Stage 2 vessel 1	4 nos of 8" x 40"
Stage2 vessel 2	4 nos of 8" x 40"
membrane size	8" dia x 40" long
membrane type	spiral wound polyamide

membrane working feed water quality	Sea Water	
R.O. PRESSURE VESSELS:		
R.O. Stage 1 pressure vessels		
number of membranes in the system	nos	12.0
no. of membranes in each pressure vessel	nos	6.0
number of pressure vessels	nos	2.0
specification of each vessel	8" dia , 6 element long	
design working pressure	psi	400.0
	bar	28.2
actual working pressure - maximum	bar	15.0
material of pressure vessel	moc	FRP
port type	end port / side port	
coupling type	victaulic	
R.O. Stage 2 pressure vessels		
number of membranes in the system	nos	10.0
no. of membranes in each pressure vessel	nos	5.0
number of pressure vessels	nos	2.0
specification of each vessel	8" dia , 6 element long	
design working pressure	psi	600.0
	bar	42.3
actual working pressure - maximum	bar	25.0
material of pressure vessel	moc	FRP
port type	end port / side port	
coupling type	victaulic	

U.F. CIP Tank	**T 107**	
capacity of tank	m3	2.0
type of tank	moc	HDPE
quantity	nos	1.0
R.O. CIP Tank	**T 112**	
capacity of tank	m3	2.5
type of tank	moc	HDPE
quantity	nos	1.0

SOLIDS MANAGEMENT – Tube Settlers & filter press – Basic Design Sheets

E process Tube Settler	**TS 101**	
design basis	surface overflow rate.	
The tube settler provides tubes held at 45 to 60 degrees inclination to the direction of flow, kept inside a FRP tank. This results in suspended solids removal by entrapment and subsequent settling. Compared with conventional clarification, tube settlers are more effective as they provide more surface area to unit volume because of the media.. However, they are not offered in this design for secondary clarification (i.e. solids from bio process). The bio process solids are hygroscopic and may form film layers on the tube, thus hindering the process of settling.		
The tube settler in this system is designed for 2 x 100% load i.e. for 2 x 100 KLD = 200 KLD of effluent coming in at a time. Even if lesser quantity comes, then the process of settling is only enhanced and not reduced.		
capacity for design	KLD	200
quantity	nos	1
feed flow rate for design / module	m3/hr	10
design surface overflow rate	m3/hr / m2	1.5
area of settling required	m2	6.67
typical width	m	2
length required	m	3.33
retention desired	hrs	1.7
volume required for this retention	m3	17
hence minimum depth required	m	2.55
size of the tube settler	3.3m x 1.7m x 2.6 m LD	

B/w waste Tube Settler	**TS 102**	
design basis	surface overflow rate.	
The backwash from the sand and carbon filters as well as from the Ultra Filtration system is bound to contain suspended solids in high volume of liquid. This is processed through a tube settler, thus concentrating the solids. The under flow of the tube settler goes to the Solids Holding Tank from wherein the solids are taken for de watering.		
feed flow rate	m3/hr	2.0
design surface overflow rate	m3/hr / m2	1.5
area of settling required	m2	1.3

typical width	m	2.0
length required	m	0.7
retention desired	hrs	1.5
volume required for this retention	m3	3.0
hence minimum depth required	m	2.3
size of the tube settler	2.0m x 1.0m x 2.6m depth	

Filter Press:	**FP 101**	
quantity (nos)	nos	2.0
design feed flow rate	m3 /hr	2.0
design inlet consistency	% w/v	1.5
desired outlet consistency of cake	% w/v	30.0
process time / batch	hrs/batch	4.0
number of batches / day	nos	2.0
total processing hours / filter press / day	hrs/press/day	8.0
type of closing	type	manual
size of plates	mm xmm	355 x 355
type of filter press	type	recessed
operational mode	mode	manual
operating pressure	bar	4.0
Typical number of plates	nos	7.0
typical no of chambers	nos	6.0
area / unit	m2	0.9
Volume / liter of water equivalent	litrs	12.6
typical thickness of cake	mm	30 - 32

TECHNICAL SPECIFICATIONS

PART B: CONVEYANCE SYSTEM IN THE PROJECT

The information provided herein is indicative and is intended to serve as a guideline for the Bidder in his preparation of the tender. The Bill of Quantity and size of equipment provided also is indicative and is subject to change during detailed engineering. Bidder can evaluate the system and may accordingly price the same in his Price Bid.

CONVEYANCE SYSTEM:-

How Effluents from various units are collected and conveyed to the treatment plant area:

The process of conveyance shall be divided into the following segments:

Segment 1:

From INSIDE each unit to the terminating flange outside the boundary of the Unit (Units' scope) and from this flange, the interconnection to the conveyance main header which is in CETP Scope Segment

Segment 2:

Main Header to the treatment plant area (CETP scope)

Segment 1

(how effluent is collected in each unit and brought to the outside battery limit and then linked with the CETP conveyance system)

- Currently, effluent is collected in a tank in each of the factory. Most of them have a pumping system for current methods of discharge / treatment.This pumping system shall be either retained or new pump shall be provided by the Unit, in line with the conveyance system requirements. The capacity recommended for each unit shall be given in the table in this section.
- The Unit shall be use the existing pumping system / new pump, to pump their effluent from their existing tank to their compound wall.This pipeline shall be terminate outside the compound wall at a height of about 1.2 mts from the ground level with a connecting flange.
- For the pipe line coming from each unit, one **ELECTRO MAGNETIC FLOW METER shall** be provided. This EMFM shall be record the total effluent given by the respective unit for treatment.
- Each unit shall be provided with a non-return valve to prevent back flow from the main header in to the effluent discharge pipeline of the unit.
- This conveyance pipeline – from each unit to connect to the Main Header size is only between 1" to 2", as the individual capacities of each Unit is less.

TYPICAL FLOW SCHEMATIC:

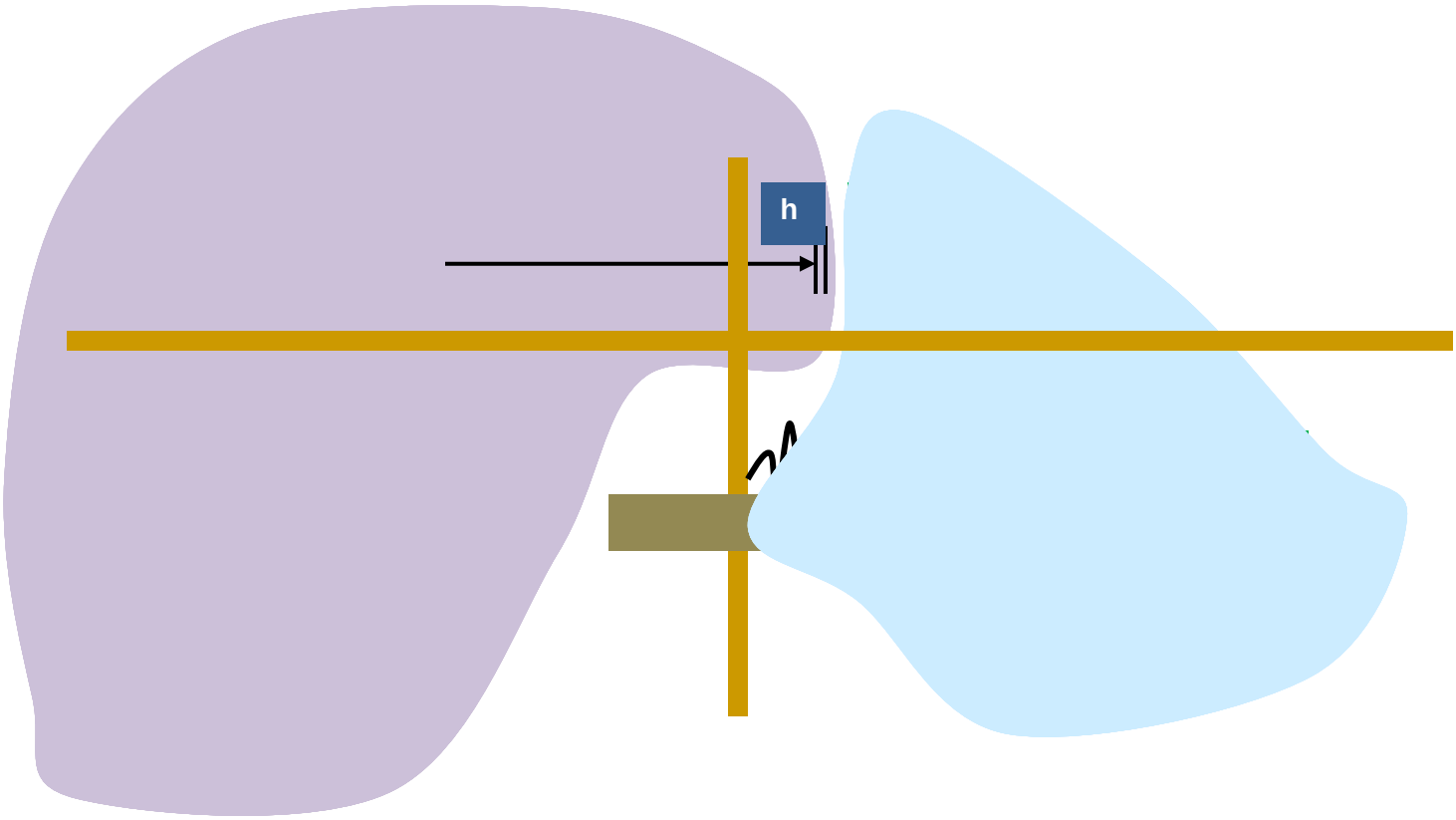

A	Existing collection tank in each Unit	G	Line from the Unit coming outside the boundary wall of the Unit
B	Existing pump / New pump as per specifications given in the table below	H	This line will terminate with this flange end / thread end
C	Non Return Valve in line to ensure that back flow is not there	I	From CETP side, this is the connecting end flange connecting the unit pipe to the main header
D	Flow control ball valve	J	Bend
E	Pressure Gauge in discharge line	K	Tee
F	Electro Magnetic Flow Meter in discharge line	L	Main Header Line

Table showing the recommended pump capacity for each Unit to transfer their effluent from within their premises to the main header of the conveyance system of the CETP:

S.NO	NAME	EFFLUENT (liters/day)	TANK (liters)	recommended pumping (liters / hour)	RECOMMENDED PIPE DIA &MOC
1	EUROKEM LABORATORIES PVT LTD	800	2000	500	1"/ PVC
2	APEX LABORATORIES PVT LTD	42000	50000	400-500	2" / PVC
3	SPINCOTECH (P) LTD	900	1000	500	1"C/ PVC
4	STEDMAN	16000	5000	2000	1.5"C/ PVC
5	GLOBAL PHARMA HEALTH CARE PVT LTD	3000	3000	1000	1"/PVC
6	ORCHID PHARMACEUTICALS – FORMULATION DIV 1	3000	10000	2000	1.5"/PVC
7	UNILINK PHARMA PVT LTD	3000	10000	1000	1" / PVC
8	CARESS BEAUTY CARE PRODUCTS (P) LTD	6100	40000	1000-2000	1.5" /PVC
9	CLARION COSMETICS (FOOD DIVISION)	8200	40000	1000-2000	1.5" / PVC
10	TAMMAN TITOE PHARMA PVT LTD	4000	5000	1000	1" / PVC

Table showing the recommended interconnecting piping sizing for each Unit to transfer to the main header:

UNIT	PIPE DIA	VALVE	BEND/ELBOW	EMFM
EUROKEM LABORATORIES PVT LTD	1"	1" , NRV	1" , 90	1"
APEX LABORATORIES PVT LTD	2"	2", NRV	2", 90	2"
SPINCOTECH (P) LTD	1"	1", NRV	1", 90	1"
STEDMAN	1.5"	1.5", NRV	1.5", 90	1.5"
GLOBAL PHARMA HEALTH CARE PVT LTD	1"	1", NRV	1", 90	1"
ORCHID PHARMACEUTICALS – FORMULATION DIV 1	1.5"	1.5", NRV	1.5", 90	1.5"
UNILINK PHARMA PVT LTD	1"	1", NRV	1", 90	1"
CARESS BEAUTY CARE PRODUCTS (P) LTD	1.5"	1.5", NRV	1.5", 90	1.5"
CLARION COSMETICS (FOOD DIVISION)	1.5"	1.5", NRV	1.5", 90	1.5"
TAMMAN TITOE PHARMA PVT LTD	1"	1", NRV	1", 90	1"

Segment 2

(the main header that conveys the effluent collected from various units to the treatment plant site)

MAIN HEADER - Design Basis:

The main header conveys the effluent from various units to the treatment location.

All the Units, except M/s Tamman & TItoe are located in a cluster, in the same road. This is indicated in plot plan enclosed.

Hence it is proposed to construct one main header starting from M/s Regenix Laboratories till M/s Clarion (as indicated in the conveyance route plan)

There are TWO EXCEPTIONS:

1. M/s Euorkem neither have sewage nor effluent connection. Hence, two new pipes will be laid for the Unit. One will convey the sewage and link with the manhole outside M/s AR Labs and the other will convey the effluent and link it with the main header starting from M/s Regenix Lab.

2. M/s Tamman & TItoe is located right opposite to the proposed CETP location. Hence, two separate pipes will be laid for the Unit. One will convey the sewage and discharge to Tank # T 100 (Raw Sewage Collection Tank) in the CETP. The other will convey the effluent and link it with Tank # T 101 (Raw Effluent Collection Tank)

All the other units are located IN ONE SINGLE ROAD and hence they will all be connected to the main header.

The Main Header by itself shall be come in TWO PARTS.

Part 1 shall collect the effluent from all the units and bring it to one point outside M/s Clarion Compound Wall.

Here, the gravity flow is BROKEN and an intermediate sump of 20 KL is constructed.

Part 2 shall be start from this sump through PUMPING SYSTEM and convey the effluent directly to the treatment plant Tank # T 101

MAIN HEADER SIZE :-

- The total design effluent is 100 KLD. However, the CETP has capability and infrastructure to treat 200 KLD i.e 100 KLD * 2 streams for effluent.
- The maximum discharge through the main header shall be when all the units are discharging their effluent at a given point of time together.
- It is assumed that all the units utilize their 100% pumping capacity when discharging their effluent.
- In such a case, the total volume of effluent that shall be to conveyed in the above criteria will be 17,000 liters / hour [Calculating the maximum discharge from each unit].

- The main header shall be provided with a gentle slope to ensure that the waste water flows without any impediment.
- Flow of the pipe line shall be 17 m3/hour.
- Velocity assumed at 1.0 m/s on a very conservative side.
- The inner dia of the pipe required for these above conditions is maximum of 3.0” dia. Hence, the header shall be of 4” diameter.
- Material of Construction : PVC
- Pipe operating pressure : 1.0 to 1.5 bar
- Pipe design withstanding pressure under normal operations : 4.0 bar
- Total header length : 1.6 kms based on site conditions.

CONSTRUCTION OF THE MAIN HEADER:-

Part 1: collection of effluents from various units & conveyance by gravity till Intermediate Sump

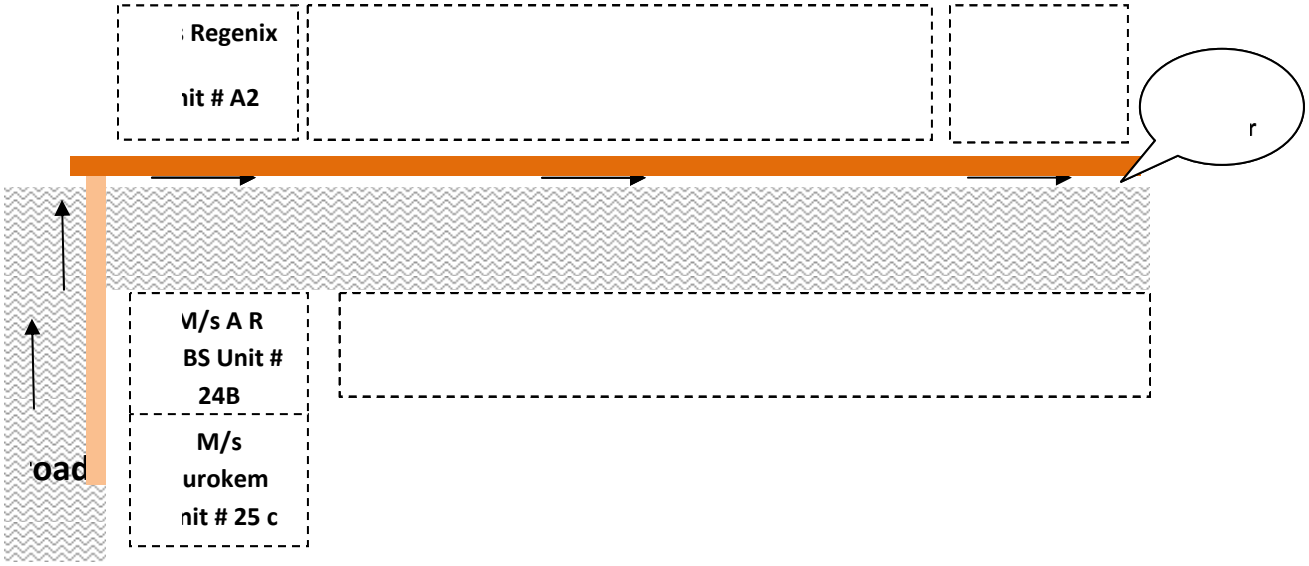

Part 1:

- Part 1 carriers all the interconnections from various units except M/S TAMMAN & TITOE. 4" dia, PVC pipe for design pressure of 4.0 KSC minimum with bends, tees of equivalent material and specifications on pressure.
- Once all the units are covered, the flow is broken through the intermediate sump located outside Clarion.

Part 2: construction of intermediate sump + pumping system and conveyance of main header till the treatment plant area.

Item # 1 : Under Ground Sump of 20 KL capacity:

- The soil conditions in the proposed CETP area is very poor and building a underground structure is not recommended. If pumping system is not present , then the indicative invert level of the effluent conveyance pipeline will be about 9 feet below the 0.00 level of proposed CETP. In addition to this, during the recent rains , it was observed that the entire proposed area was flooded. Hence the main process tanks are all kept above ground. The plant and machinery shed is kept above the main process tank due to site situation. All these factors were studied for the techno-economic feasibility and based on the outcome, it has been decided to construct this intermediate tank and pump the effluent.
- The sump shall be of approximately 20,000 liters capacity.
- The location of the sump is indicated in the drawing. The sump is proposed to be located either near the last unit that is discharging their effluent i.e M/s CLARION or near the existing sump cum pump house for the sewage.

Item # 2 : Effluent Transfer Pumps

- From the sump, it is planned to install a pump to convey the effluent to the proposed CETP.

- The capacity of the pumps shall be about 20,000 liters / hour, keeping In mind (a) the maximum discharge from all units at a time is only 16-17 m^3 / hour and the capacity of the tank under maximum discharge is more than one hour.

- The pumps shall be provided with dry run protection. The pumping system shall be linked with the level of effluent in the sump.
- It is proposed to provide REED BASED proportionate height level controlling system. The control system shall be of five levels LOW LOW , LOW , MEDIUM, HIGH and HIGH HIGH with progressive height from the bottom level of liquid.
- Two pumps are provided. During normal operation, one will working and the other will be standby.
- The pumps are typically submersible centrifugal ,though, at a later date, based on case of maintenance, these may be replaced with horizontal centrifugal, non-clocg, open impeller pumps.

The pump operation w.r.t. level will be as follows:

LEVEL CONDITION	OPERATION
"LOW-LOW"	Both pumps shall be shutdown through dry run protection.
"LOW"	Typically, "LOW" level shall be 20% higher than "LOW-LOW" level. One pump shall start and if the level goes down again to "LOW-LOW" this shall be again cutoff.
"MEDIUM"	One pump operates smoothly. Typically, this is 50% of total liquid depth.
"HIGH"	This point is reached at about 70% of the liquid depth. At "HIGH POINT, the second pump will start operating and will stop once the level goes below HIGH".
"HIGH-HIGH"	This is an highly abnormal condition and is activated when the liquid depth reaches 90% of the total depth.Both pumps will operate at this point.

The operation of the pumps shall be through local auto control system. Provision for normal over ride shall also be provided. The auto control system integration will be done with 100% redundancy because of the importance of this infra structure.

Item # 3: Main Header from Pump Discharge to T 101 – Effluent Collection Sump in the treatment plant area:

- The main header now will continue from the discharge of the pump till it reaches the effluent collection tank (T101) in the proposed CETP.
- The main header is now designed for the maximum discharge capacity of the pump which is 20m3/ hour. At a pumping velocity of about 2.0 m /sec, the recommended pipe diameter works out to be 3" inches.
- The maximum vertical head will be about 4.23 meters based on the site Topo Survey results [Please see reference drawings]. Sump vertical depth will be about 3.0 meters. The maximum horizontal head loss, bend loss is calculated at about 3.67 meters.
- Though the total theoretical head loss is about 11 – 12 meters, it is proposed to have a pump of capacity 20m3/hour discharging at 25 MWC under normal working conditions.
- In reality, the flow through will be lesser which, in turn, would only increase the next available head for the pump, thus making the selection sustainable and safe.
- Please refer the routing map for conveyance system.

SEWAGE CONVEYANCE:-

- All the units, except M/s EUROKEM have existing connection and conveyance system to take their sewage to the existing wells near the oxidation pond (please see drawing).
- None of the discharges are currently been monitored. It is thus, first planned to install Electro Magnetic Flow meters (EMFM) in each of the units in the discharge line of the sewage before it connects with main header.
- The sewage now gets collected in the existing wells before being pumped to the existing oxidation pond, which is dysfunctional. Hence, before the sewage header enters the oxidation ponds, it will be re-routed from the last manhole, to join the effluent line and reach the CETP area. The pipe routing is given in the drawing.

- This re-routed sewage collects in a proposed underground sump (T100). From here, it will be pumped to common collection tank, to be further processed for treatment.

TREATED WATER DISTRIBUTION:-

- While environmental management and pollution abatement are the core reasons for the CETP, it is also important to recycle and re-use water. For this, the CETP has technically superior membrane separation system, which provides 80% of the inlet water processed and ready for re-use.
- As on date, all the units are purchasing lorry water at a cost, with no control on quality. This water is processed through individual treatment units and used for both process, utility as well as for toilets, washings ect…
- Now it is planned to supply the recycled water to the units. The water shall be as good, if not better than the current source of their raw water. However, this treated water shall be re-used only for tertiary applications involving toilet flushing, gardening, floor washing etc…This amount of water shall be saved.
- Treated water i.e. permeate from the R.O Plant is collected in a final treated water sump after PH correction.
- From this sump, the water is conveyed to each unit, through the same system for effluent conveyance, but done in reverse.
- First, the water pumped through Hydro Pneumatic System. Two options were evaluated for techno-commercial feasibility. One was to construct an over head tank and supply through gravity main to all the units. The second option was to have pressurized system supply.
- Construction of the over head tank was found to be economically unfeasible due to poor soil conditions in the proposed site. Also, using a hydro pneumatic system was found to be technically superior, due to the following aspects:

    1. Constant flow and pressure at all points in the system.
    2. Greater accuracy and consistency in monitoring the off take from each unit through Electromagnetic flow measurement.

- The Hydro Pnuematic system shall be installed in the plant area. From here, a supply main will go to the location of all the units, except M/s Tamman&Titoe. For the latter, a separate pipeline will be provided directly from the system/plant output line due to the proximity of the unit.

- The main header will be laid alongside the incoming effluent line (please see the pipe routing drawing). The header will terminate at starting point of the main effluent header.
- From this supply header, individual pipelines with non-return valve will be provided to each unit with a flanged end connection terminating before the compound wall of each unit.
- From this connection, the user has to convey the treated water in to his unit with his own pipeline system. In this user pipeline, an EMFM will be installed to monitor and record the usage of treated water by the user.
- Each pipeline shall be provided with a ball valve which the user can open and collect the treated water in his tank.
- The pipeline diameter, specifications will be same as that for effluent intake from each unit (which is provided earlier).

SUMMARY:-

A :EFFLUENT CONVEYANCE:-

- Conveyance of raw effluent from M/s Eurokem Laboratories to join the main header .
- Conveyance of raw sewage from M/s Eurokem Laboratories to join the sewage header near AR Labs.
- Main effluent conveyance header from individual units till the intermediate sump.
- Intermediate sump about 20KL capacity.
- Transfer pumps- submersible centrifugal /horizontal centrifugal non clog open impeller pumps of 20 m^3/hr @ 20 MWC.
- Main header section || to the treatment plant area.
- Inflow piping from each unit, starting from the compound wall of each unit with termination in the manhole
- Termination of the raw effluent conveyance piping at T-101.
- One number of Electromagnetic flow meter of suitable range and for fitment in suitable pipe size, to be installed in the raw effluent intake line from each unit.
- Separate effluent line from M/s Tamman&Titoe (opposite to the proposed location), terminating at T-101, along with Electro magnetic flow meter.

B: SEWAGE CONVEYANCE:-

- Conveyance of raw sewage from M/s Eurokem Laboratories to join the sewage header near AR Labs.
- Existing sewage conveyance network to be retained. Necessary upgradation to be done to the existing pumping system.
- From the last manhole, before reaching the existing open wells, the raw sewage will be diverted to terminate at T-100 with the plant area.
- Providing EMFM for each unit to measure & monitor the amount of sewage discharge.

C: TREATED WATER DISTRIBUTION:-

- Provision of hydro pneumatic system 5m^3/ hr, with line pressure at user point, not less than 20 bar.
- Main header to supply to all units.
- Individual pipeline lateral from main header to supply to each unit, through same manhole used for effluent conveyance. Both the effluent pipe line and return water pipeline will run side by side.

CIVIL WORKS IN THE CONVEYANCE SYSTEM:

- Detailed civil works Bill of Quantity is given in the following pages. The conceptual approach for construction related activities is presented below:

  Conveyance of sewage line from Eurokem to the man hole near AR Labs – earth work excavations

- Conveyance of effluent from Eurokem to main header earth work excavations and Main header line starting from Reginix up to Clarion, as shown in the drawing. The main header will be buried piping covered with compacted earth, between the end of existing road and the compound wall / boundary of the individual units.

- The excavations will be typically 2-3 feet wide. Starting depth of pipelines about 2-3 feet from FGL at pipe insertion point. The site has undulating gradient with an initial increase in gradient for about 2-4 feet followed by sloping level till the last unit i.e M/s Clarion. Based on site investigations and techno-economic feasibility studies, the typical excavation depth will be about 5 feet average with respect to finished ground level. Individual section calculations and design engineering will be provided during detailed engineering prior to execution.
- Civil works consists of earthwork excavations, preparation of support system for resting the main header till the intermediate sump.
- For every unit, the joining with the main header will be made through man hole. The details of the same are given in the Bill of Quantity for Civil Works.

Other civil works:

- Construction of underground intermediate sump of capacity 20 KL. All civil works related to this, including provision of cover slab ,rungs, manholes ect…

Excavations and preparation of pedestal and support systems for laying of the main header pipeline – pumped flow from UG sump.

Civil works related to road crossing at the following locations:

1. Effluent line from M/s Eurokem filling the main header.
2. Effluent line from M/s Apex Laboratories filling the main header.
3. Effluent line from M/s Spincotech joining the main header.
4. Effluent line from M/s Unilinx joining the main header.
5. Road crossing of the main header from M/s Clarion to the opposite side (please refer pipe routing drawing).
6. Road crossing to the opposite side of the proposed CETP.

Civil works will generally consist of earthwork, excavations, preparing of surface, laying of pipeline, suitable covering , re-preparation of top surface and road finishing to bring the same back original condition. Suitable identification working will be provided on the starting side as well as on the ending side of the road crossing.

Mechanical Works in the Conveyance System:

These consist of the following items. Details are given in the separate Bill of Quantity provided in the next section.

- Effluent line with valves as shown in the drawing earlier from various units connecting to the main header
- Main header line
- Intermediate pumps
- Sewage connection from existing last manhole to U.G. Sump T 100 in treatment plant area
- Effluent Main Header connection to T 101 Effluent Collection Sump in treatment plant area
- Sewage and Effluent Lines separately from M/s Tamman & Titoe to T100 and T101 respectively.
- Hydro Pneumatic System for distribution
- Distribution main header
- Individual return water supply lines from the distribution main header to the individual units with valves provision as given in the drawing.

Electrical & Instrumentation Works in the Plant Area:

The brief list is given below. BOQ is provided in the next section.

- Electrical Power Connection – typically On-Off PB station for the intermediate transfer pumps
- Electro Magnetic Flow Meter to be provided in the following locations
- Effluent line from each Unit discharging to the main header
- Sewage line discharging from each Unit
- Return Supply Line to each Unit
- Pressure Gauge at the outlet of the intermediate transfer pump
- Reed Based Level Control for intermediate transfer pump

TREATMENT PLANT AREA - EQUIPMENT – BASIC BILL OF QUANTITY

The brief specifications and the quantity of each of the mechanical equipment in the process area is provided herein. These are indicative and subject to change during Detailed Engineering. These are provided as a guideline for the Bidder to place his Price Bid Offer

HORIZONTAL CENTRIFUGAL PUMPS - Non Clog, Open Impeller pumps		
Cost for design, engineering, manufacture, packing, forwarding, freight to site, Supply, installation, testing, trial run and commissioning of horizontal centrifugal, non - clog, open impeller pumps for various process applications . The pumps to be fitted with TEFC, IP 55, Class F insulated SQI motor, suitable for 3 phase, 50 Hz, 415v AC power supply. Pumps will be mounted on suitable pump base with fasteners. All pumps will have negative suction process condition and hence are to be fitted with Non Return Check Foot Valves. All pumps to be provided with dry run protection. Impeller shall be of C.I. construction and should be capable of handling solids typically found in raw sewage transfer applications. Other parts material ie.. shaft, shaft sleeve etc as applicable will be developed for process fluid pH of around 6.5 to 7.5, maximum salinity of 10,000 mg / liter		
P102 Raw sewage transfer pumps, 5.8 m3/hr, 20 mwc	2 nos	
P103 aeration feed pumps, 8.5 m3/hr, 20 mwc	3 nos	
P104 return sludge pumps, 6 m3/hr, 15 mwc	3 nos	
P115 backwash waste tube settler feed pumps, 2 m3/hr, 20 mwcc	2 nos	

HORIZONTAL CENTRIFUGAL PUMPS - Clear Water Pumps		
Cost for desing, engineering, Manufacture, packing, forwarding, freight to site,Supply, installation, testing, trial run and commissioning of horizontal centrifugal, clear water pumps for various process applications. The pumps to be fitted with TEFC, IP 55, Class F insulated SQI motor, suitable for 3 phase, 50 Hz, 415v AC power supply. Pumps will be mounted on suitable pump base with fasteners. All pumps will have negative suction process condition and hence are to be fitted with Non Return Check Foot Valves. All pumps to be provided with dry run protection. Impeller shall be of C.I. construction and closed type. Other parts material ie.. shaft, shaft sleeve etc as applicable will be developed for process fluid pH of around 6.5 to 7.5, maximum salinity of 10,000 mg / liter		
P105 filter feed pump, 8.5 m3/hr, 30 mwc	3 nos	

P106 filter backwash pumps, 20 m3/hr, 25 mwc	3 nos	
P107 U.F.feed pumps, 8.5 m3/hr, 25 mwc	3 nos	
P108 U.F. backwash pumps, 17 m3/hr, 25 mwc	3 nos	
P110 R.O.Stage 1 feed booster pumps, 8.5 m3/hr, 20 mwc	3 nos	

HORIZONTAL CENTRIFUGAL PUMPS - C.I.P. Pumps

Cost for desing, engineering, Manufacture, packing, forwarding, freight to site, Supply, installation, testing, trial run and commissioning of horizontal centrifugal, CLEANING IN PLACE pumps The pumps to be fitted with TEFC, IP 55, Class F insulated SQI motor, suitable for 3 phase, 50 Hz, 415v AC power supply. Pumps will be mounted on suitable pump base with fasteners. Pumps will be on FLOODED SUCTION. All pumps to be provided with dry run protection. Operation of pumps through Motor Control Centre Feeder Supply. Impeller shall be of S.S. construction and full pump to be in SS 304 material of construction to handle cleaning process chemicals. Pump to be suitable for high corrosive duty condition as: (a) pH between 2.0 to 13 (b) TDS around 5,000 to 20,000 ppm

P109 U.F. C.I.P. pump, 5 m3/hr, 25mwc	2 nos	
P114 R.O. C.I.P. pumps, 6 m3/hr, 25 mwc	2 nos	

HORIZONTAL CENTRIFUGAL PUMPS - Non Clog Open Impeller in S.S. wetted parts

Cost for design, engineering, Manufacture, packing, forwarding, freight to site, Supply, installation, testing, trial run and commissioning of horizontal centrifugal, non - clog, open impeller pumps fitted with TEFC, IP 55, Class F insulated SQI motor, suitable for 3 phase, 50 Hz, 415v AC power supply. Pumps will be mounted on suitable pump base with fasteners. All pumps will have negative suction process condition and hence are to be fitted with Non Return Check Foot Valves. All pumps to be provided with dry run protection. Operation of pumps through Motor Control Centre Feeder Supply. Impeller shall be of C.I. construction and should be capable of handling solids typically found in raw sewage transfer applications. Other parts material ie.. shaft, shaft sleeve etc as applicable will be developed for process fluid pH of around 6.5 to 7.5, maximum salinity of 10,000 mg / liter

P101 E process feed. pump, 5 m3/hr, 15 mwc	3 nos	
P112 R.O.Stage 2 feed booster pumps, 6 m3/hr, 20 mwc	3 nos	

VERTICAL CENTRIFUGAL PUMPS -R.O. feed high pressure pumps

Cost for desing, engineering, Manufacture, packing, forwarding, freight to site, Supply, installation, testing, trial run and commissioning of vertical centrifugal, high pressure vertical centrifugal multi stage pumps fitted with TEFC, IP 55, Class F insulated SQI motor, suitable for 3 phase, 50 Hz, 415v AC power supply. Pumps will be mounted on suitable pump base with fasteners. Pumps will have wetted parts in S.S and all other parts to be in S.S. also. C.I. is not acceptable as per this process specification. Operation of pumps through Motor Control Centre Feeder Supply. High Pressure Pumps to be provided with Low Pressure Switch and High Pressure Switch protection. LPS to cut off pump at pressure < 1.5 bar and HPS to cut off pump at pressure > 20% extra to the outlet pressure as per process conditions.		
P111 R.O. Stage 1 high pressure pump, 8.5 m3/hr, 15 bar (150 mwc)	3 nos	
P113 R.O. Stage 2 high pressure pump, 6 m3/hr, 25 bar (250 mwc)	2 nos	

DOSING TANKS		
Cost for desing, engineering, Manufacture, packing, forwarding, freight to site, Supply, installation and erection of LLDPE / FRP / PP chemical dosing tanks of various capacities as given below. The dosing tanks shall be free standing, to be kept on fixed concrete floor. Dosing tanks to be equipped with inlet line provision for chemical mixing water and drain provision. Dosing pumps to be mounted on top of the dosing tanks.		
DT 101 pH correction dosing tank of 100 liters capacity	1 nos	
DT 102 alum dosing tank of 100 liters capacity	1 nos	
DT 103 hypo dosing tank of 200 liters capacity	1 nos	
DT 104 UF alum dosing tank of 100 liters capacity	1 nos	
DT 105 R.O. stage 1 SMBS dosing tank of 100 liters capacity	1 nos	
DT 106 R.O. Antiscalant dosing tank of 100 liters capacity	1 nos	
DT 107 R.O. stage 2 feed pH booster tank of 100 liters capacity	1 nos	
DT 108 R.O. permeate pH dosing tank of 100 liters capacity	1 nos	

DOSING PUMPS

Cost for desing, engineering, Manufacture, packing, forwarding, freight to site, Supply, installation, testing, trial run and commissioning of electronic metering pumps of various capacity and at various pressures listed below. The dosing pumps are to be mounted on top of the respective dosing tanks. The arrangement should be complete with feed check valve, flexible teflon / rigid PVC piping for suction line and rigid PVC for supply. The dosing pump should have stroke and frequency variable facility.		
DP 101 pH correction dosing pump , 0 - 6 lph range, 2.0 KSC pressure	1 nos	
DP 102 alum dosing pump , 0 - 6 lph range, 2.0 KSC pressure	1 nos	
DP 103 hypo dosing pump , 0 - 10 lph range, 2.0 KSC pressure	1 nos	
DP 104 UF alum dosing pump , 0 - 6 lph range, 2.5 KSC pressure	1 nos	
DP 105 R.O. stage 1 SMBS dosing pump , 0 - 6 lph range, 2.5 KSC pressure	1 nos	
DP 106 R.O. Antiscalant dosing pump , 0 - 3 lph range, 2.5 KSC pressure	1 nos	
DP 107 R.O. stage 2 feed pH booster dosing pump , 0 - 6 lph range, 2.5 KSC pressure	1 nos	
DP 108 R.O. permeate pump , 0 - 6 lph range, 2.5 KSC pressure	1 nos	
Spare Dosign Pumps , 0 - 6 lph range, 2.5 KSC pressure	2 nos	

E - Process Reactor		
Cost for design, engineering, Manufacture, packing, forwarding, freight to site,supply, installation, testing, trial run and commissioning of Eprocess Reactor suitable for typical inlet C.O.D. of about 7,000 ppm and B.O.D. of about 2,000 ppm and T.S.S. of about 1,200 ppm and T.D.S. of about 10,000 ppm. Reactor to be of F.R.P. construction of thickness not less than 4 mm and typical overall size of about 7.68m x 3.55m , with inlet distrubutor channels and pipes, overflow channels, skimmer mounted on top of the reactor with 0.25 hp reduction gear TEFC, IP 55, Class F motor, skimmer to be provided with MS rake arms with rubber squeegees/flaps at their end, typically rotating at 1 to 5 rpm. The E Process to be designed for an current factor amperage range of 20 to 100 amps at 10 to 30 volts, for the inlet water quality. The electro cell is to have anode in aluminum and cathode in aluminum / SS in plates form, with plate thickness not exceeding 3.9mm. Typical plate size to be about 0.4m x 0.4m and 10 sets of 60 electrodes are required for the process flow. Preference given to conductivity grade aluminum. Gap between anode and cathode not to exceed 11 mm.		
ER 101 E Process Reactor for flow rate of 5 m3/hr at feed	**2 nos**	

Tube settlers

Cost for design, engineering, Manufacture, packing, forwarding, freight to site, supply, installation, testing, trial run and commissioning of tube settlers in FRP construction. Tube settler plates to be in PVC of preferred dimensions 0.6m x 1.2m and placed at an inclination angle of 45 to 60 degress, inside the FRP compartment. Tube settler to have inlet about 100mm from the bottom of the side water depth. Hopper bottom with sludge well to be provided for solids collection. Sludge well to be about 0.4m x 0.4m x 0.4m minimum and can be increased as per FRP design considerations. Outlet through launder falling into the next unit operation through gravity flow. Dimensions of the tube settlers as per drawing and design specifications		
TS 101 3.3m x 1.7m x 2.6m LD + 0.4m FB	1 no	
TS 102 2.0m x 1.0m x 2.6m LD + 0.4m FB	1 no	

Aspirating aerators		
Cost for design, engineering, manufacture, freight to site, supply, installation, testing, trial run and commissioning of aspirating aeration system in extended aeration process. Aspirating aerators to be of 5 hp rating and preferred model is STORMIX 5. System to be complete with inlet air pipe, aerator assembly to be fully submerged type with submerged motor, propeller system. Aspirating aeration to be designed for about 10 to 15 micron bubble diameter of air diffusion and capable of handling design BOD load of 90 kgs/day		
ASP 101 5 hp aspirating aerator + spare included	**3 nos**	

Secondary Clarifier Mechanism		
Cost for Design, engineering, manufacture, freight to site, supply, installation, testing, trial run and commissioning of Secondary Clarifier mechanism to suit tank of diameter 6.0mts and with 2.8m LD total including hopper bottom and sludge well depths. Mechanism to have central driven geared motor with central shaft in MS, rake arms in MS and neoprene squeegees. Access through Platform from peripheral to the central drive with hand rail protection. Weir loading and design calculations to be as per specifications given in CPHEEO manual on Sewage Treatment		
SC 101 secondary clarifier mechanism to suit 6.0m dia x 2.8m approx TD	**1 no.**	

Sand Filter - SF 101 A/B – Two (2) nos.
Cost for design, engineering, Manufacture, packing, forwarding, freight to site,Supply, installation, testing, trial run and commissioning of Pressure Sand Filter in F.R.P. vessel construction, model # 4072 with multi port valve and distributor system. Filter diameter to be 40" and HOS to be 72". Filter to have gravel, pebble and sand media as per specifications given in CPHEEO manual for Water Treatment and depth as per data sheets. Typical media depths not be less than 200mm for gravel, 150 mm for pebble and 200 to 250 mm for sand. Sand characteristics to be as per specifications of CPHEEO manual. Filter to have dirt loading capacity equivalent to inlet TSS of about 99 ppm and should be capable of giving outlet TSS < 10 ppm reckoned at the rate of 3 to 7 kgs of TSS / sq.m. of filtration area. DIrt loading capacity to be sufficient to initiate backwash once in 8 hours i.e. once / shift. Filter to have inlet and outlet piping, inlet and outlet for backwash and air vent.

Carbon Filter		
Cost for design, engineering, Manufacture, packing, forwarding, freight to site, Supply, installation, testing, trial run and commissioning of Activated Carbon Filter in F.R.P. vessel construction, model # 3672 with multi port valve and distributor system. Filter diameter to be 36" and HOS to be 72". Filter to have activated carbon media supported on gravel media as per specifications given in CPHEEO manual for Water Treatment. Activated Carbon to be preferably of coconut shell based, chemically extruded carbon with Iodine Value NOT LESS THAN 900. Typical Chlorine Halving Value of carbon should not be more than 12 cms. Optionally, peat extruded, thermally activated high purity granular carbon can also be provided with Iodine Value not less than 1100 and with Chlorine Halving Value of not more than 6.5 cms. Filter to have inlet and outlet piping, inlet and outlet for backwash and air vent. Filter to be mounted on HDPE / PP stand given by the manufacturer.		
CF 101 A/ B Carbon Filter model 3672 complete with all accessories	**2 nos**	

Bag Filter		
Cost for design, engineering, Manufacture, packing, forwarding, freight to site, Supply, installation, testing, trial run and commissioning of Bag Filter as pre-treatment to the UF module inlet water. Bag filter to have PP bag, 20 micron nominal rating, typically about 33" long x about 7" dia, fixed in a SS 304 housing, with inlet and outlet connections, pressure guage 0 - 7 bar, 1.5 inch dial, SS bourdon type, glycerine filled guage to be fitted in the filter housing. Filter housing to have drain connection for cleaning.		
Bag filter, 8.5 m3/hr, PP bag, SS housing, 20 microns rating	**2 nos**	

Micron Filters		
Cost for design, engineering, Manufacture, packing, forwarding, freight to site, Supply, installation, testing, trial run and commissioning of Micron Filters. PP spun cartridge type depth micron filter fixed in a SS 304 housing, with inlet and outlet connections, pressure guage 0 - 7 bar, 1.5 inch dial, SS bourdon type, glycerine filled guage to be fitted in the filter housing. Filter housing to have drain connection for cleaning. Rating and length of cartridges as per details given below		
MF 101 Ultra Filter C.I.P. system filter, 40" long x 2 nos, 25 micron rating	1 no	
MF 102 R.O. stage 1 micron filter, 40" long x 4 nos, 10 micron rating	1 no	

MF 103 R.O. stage 2 micron filter, 30" long x 2 nos, 10 micron rating	1 no	
MF 104 R.O. C.I.P. system filter, 30" long x 3 nos, 25 micron rating	1 no	

Ultra Filtration System		
Cost for design, engineering, Manufacture, packing, forwarding, freight to site, Supply, installation, testing, trial run and commissioning of complete Ultra Filtration System. The system to be consisting of Ultra Filtration Modules with inlet and outlet connections for normal process, backwash and rinse, to be mounted on a MS Epoxy skid, including necessary support and fittings. Ultra Filtration Module to be CROSS FLOW hollow fine fibre filter, vertically mounted, around 100 to 120 KD M.W.C.O. and operated at around 40 to 50 GFD flux. Typical recovery is to be 90% to 94%. Membrane module to be in PES / PP / PVDF with housing integrated with the membrane module. Inlet to filter and Reject to drain to have victaulic coupling with S.S. piping. Product to be taken out from centre. Recommended to have TOP to DOWN flow in normal mode with reversibility built in, in the engineering design. Ultra Filtration System to be operated through local P.L.C. system with solenoid valves for inlet, outlet, backwash inlet, backwash outlet connections. Suitable solenoid valves (electrically operated) to be provided at the respective locations. UF system will have a dedicated backwash pump (as per specifications mentioned earlier) and the backwashing and rinsing operations will happen through PLC with manual over ride facility.		
UF 101 A/B Ultra Filter System, 8.5 m3/hr x 2 streams, 90% recovery, 120 KD M.W.C.O., flux not greater than 50 GFD , on MS epoxy skid complete with all fittings and accessories	1 lot	

R.O. Pressure Vessels		
Cost for design, engineering, Manufacture, packing, forwarding, freight to site, Supply and installation of pressure vessels to house R.O. membranes. Pressure Vessels to be in F.R.P. construction. Preference given for SIDE PORT connections, but END port is also acceptable. Connections between end cap to pipe to be through victaulic coupling. Pressure vessels to be mounted on M S Epoxy skid with horse shoe clamping / alternative arrangement. Pressure vessels to be designed as per pressure rating given for individual stages.		
PV 101 8 inch dia x 6 element long @ 600 psi working pressure rating	2 nos	
PV 102 8 inch dia x 4 element long @ 900 psi working pressure rating	2 nos	

R.O. Membranes

Cost for design, engineering, Manufacture, packing, forwarding, freight to site, Supply and installation of R.O. membranes. R.O. Membranes to be spiral wound, poly amide membranes of brackish water and sea water configurations as given below. Typically, for brackish water membrane, the active surface area should not be greater than 400 sq.ft and for sea water membrane, the active surface area should not be greater than 365 sq.ft. Typically, mill space below 32 mil is not acceptable as the process fluid is effluent and sewage mix. All membranes to be 8 inch dia x 40 inches long. Bigger diameter is not acceptable. Membrane to be supplied with a MINIMUM OF TWO NUMBER of interconnectors. Typical feed TDS will be around 6,000 to 7,000 ppm for first stage for brachish water and 15000 to 17000 ppm in second stage for sea water membranes		
Brackish water membranes	12 nos	
Sea Water membranes	10 nos	

R.O. SKID		
Cost for design, engineering, Manufacture, packing, forwarding, freight to site, Design, engineering, fabrication, supply, installation of MS epoxy skid to house the R.O. system. The skid is to have TWO portals for 6 element 8" dia vessels and TWO portals for 5 element 8" dia vessels. Skid is also to have facility of housing R.O. permeate flow meter and R.O. Reject Flow Meter. Memrane housings to be clamped to the skid through Steel semi circular clamp with Rubber bottom to prevent movement of the housings. Skid to have facility for two additional portals which can be used to load additional membrane housings at a later date		
R.O. skid in MS epoxy material complete with all accessories and fittings	**1 lot**	

C.I.P. Tanks		
Cost for design, engineering, Manufacture, packing, forwarding, freight to site, Supply, installation of HDPE tanks for Cleaning In Place System of both R.O. as well as U.F. systems. The tanks are to have two to three inlet facilities from the top and have three outlet at about 200 mm from the bottom. Drain arrangement also to be provided. Tanks are to be in HDPE from ISO certified organization only. Tanks will be mounted on a suitable civil platform. Tanks are to be provided with tubular type level indicator externally. Suction pipe to CIP pump to be supported properly to prevent vibration induced leakage to the tanks. Suction line to be minimum of 2.4 mts length between the tank and the suction head of the pump.		
T 107 U.F. CIP tank of 2,000 liters capacity	1 no	
T 112 R.O. CIP tank of 2,500 liters capacity	1 no	

Solids Dewatering System		
cost of design, engineering, manufacture, procurement, freight to site, supply, installation, testing, trial run and commissioning of suitable filter press system. The system consists of screw / reciprocating plunger pump to feed to the filter press. Filter Press will be manual, recessed type press with MS fabricated structure pipe button surface and MS flat parallel bar, with PP cloth. Each batch will be of 4 hours duration and 2 batches are expected in a day. Filter operations to be manual. Water with 1.5% w/v inlet solids is expected and the outlet cake consistency should not be more than 36.8% moisture. six chamber and seven plates of size 355mm x 355mm and with active surface area not less than 0.78 m2 is to be provided. FRP drip tray with drain valve is also to be provided. Filter Press will have centre inlet and four corner outlet. Filter Press feed pump to have TEFC, IP 55, Class F insulated motor. The Filter PRess Unit will be mounted on a platform and all around drain system to be provided to prevent the filtrate water from contaminating the entire surroundings.		
P 116 Filter Press Feed Pump, 2.0 m3/hr, 5 bar operating pressure with all accessories and fittings	2 nos	
FP 101 Filter Press, 2,000 lph feed flow rate, 4 bar operating pressure with all accessories and fittings	2 nos	

Conveyance System – Equipment and Accessories – Bill of Quantity

Note: this is only indicative and may vary during detailed engineering. This information is provided to the Bidder to enable him evaluate the cost of the components

Machinery, Piping and Instrumentation Works		
Supply and fixing main header pipe for effluent conveyance, 4" O.D., PVC material, design pressure rating capability at 6 KSC, of approved ISI make - Finolex / Equivalent , laying and fixing will be as per conveyance route plan and final route map frozen during detailed engineering...		
Effluent Feeder Main Header	1700 mts	

Supply and fixing main header pipe for return supply (treated water) conveyance through hydro pnuematic system, 3" O.D., PVC material, design pressure rating capability at 9 KSC, of approved ISI make - Finolex / Equivalent , laying and fixing will be as per conveyance route plan and final route map frozen during detailed engineering...		
Return Supply Feeder Main Header	1700 mts	
Supply and fixing of NON RETURN VALVES to be provided for each Unit, of varying sizes as indicated below. M.O.C. of NRV to be suitable for handling pH range 2.0 to 12.0 and as per BIS standards.		
1" NRV	4 nos	
1.5" NRV	5 nos	
2" NRV	2 nos.	
Supply and fixing of P.V.C. Ball Valves as per BIS standards in the following sizes for effluent header		
1" PVC Ball Valve	4 nos	
1.5" PVC Ball Valve	5 nos	
2" PVC Ball Valve	2 nos.	

Supply and fixing of P.V.C. spool piece with flanged end for connecting the Unit line with the inlet to the CETP header line		
1" spool piece, 5 mts long	4 nos	
1.5" spool piece, 5 mts long	5 nos	
2" spool piece, 5 mts long	2 nos.	

Supply and fixing of P.V.C. spool piece with flanged end for connecting the inlet to the CETP to the main effluent conveyance header:		
1" spool piece, 3 mts long	4 nos	
1.5" spool piece, 3 mts long	5 nos	
2" spool piece, 3 mts long	2 nos.	
Supply and fixing of P.V.C. Bends & Tees in the Unit Line connecting to the effluent main header:		
1" bend	12 nos	
1.5" bend	15 nos	
2" bend	6 nos.	
1" tee	4 nos	
1.5" tee	4 nos	
2" tee	2 nos	
Supply and fixing of P.V.C. connecting tees		
4" x 1" tee	4 nos	
4" x 1.5" tee	5 nos	
4" x 2" tee	2 nos.	

Supply and fixing of P.V.C. pipe line, 4 KSC pressure rating, approved ISI make, to convey the effluent from the collection tank of the individual units to outside the compound wall of the individual units:		
1" dia PVC	8 lengths	
1.5" dia PVC	8 lengths	
2" dia PVC	4 lengths	

Supply and fixing of Electro Magnetic Flow Meters (EMFM) to measure the quantum of effluent discharged from each unit. The EMFM to be line mounted and will display, record and report the flow in the pipe line.		
EMFM for 1" dia line	4 nos	
EMFM for 1.5" dia line	5 nos	
EMFM for 2" dia line	2 nos	
Engineering, suply, fixing, installation, testing, trial run and commissioning of hydro pneumatic system for return supply line, including conveyance pump rated at **10 m3/hr @ 5.7 bar line pressure,** including pressure vessels, valves, fittings - all complete		
hydro pnuematic system 10 m3/hr, 5.7 bar line pressure	1 lot	
Supply and fixing of P.V.C. Ball Valves as per BIS standards in the following sizes for return line to various Units.		
1.5" Ball Valve	10 nos.	
Supply and fixing of P.V.C. spool piece with flanged end for connecting the Unit line with the return supply header		
1.5" spool piece, 5 mts long	20 nos.	
Supply and fixing of P.V.C. Bends in the Unit Line connecting to the return supply header		
1.5" bend	20 nos	
Supply and fixing of P.V.C. connecting tees		
3" x 1.5" tee	10 nos	
Supply and fixing of P.V.C. pipe line, 4 KSC pressure rating, approved ISI make, to convey the treated water to the compound wall of individual units:		
1.5" dia PVC	20 lengths	

Civil Works

The design basis and sizing of the civil units are given below. These are indicative and the Bidder to provide deviations if any, for these with suitable justifications.

Bidder to read this in conjunction with the drawings and the general specifications in this section. Bidder to note that, in case of any discrepancy between the Project specifications given here and the General Specifications, the former will be taken as the basis of evaluation and implementation.

Project Specifications:

The civil works in the treatment plant can be broadly divided into five parts

Part # 1 : Raw sewage collection tank UG sump – to be constructed separately

Part # 2 : Combined Tanks in treatment process

Part # 3 : Secondary Clarifier Tank (circular tank to be constructed separately)

Part # 4 : Pre Engineered Building above the tanks to house the Plant & Machinery

Part # 5 : Peripheral Works – compound wall, gate, road etc..

Part # 1 : Raw Sewage Collection Tank

This tank is to be constructed to collect the raw sewage which is currently coming in the existing UG pipeline. Currently, this is going to the existing sewage wells. This will be stopped and re-routed to the UG sump.

This sump will be the ONLY sump which will be below ground

Raw sewage collection tank	**T 100**	
main design basis	retention time	
total sewage generated by the Units	m3/day	56.25
minimum retention recommended	hrs	8
minimum capacity of tank needed	m3	18.75
Invert level of incoming sewage	Mts BGL	1.5
Liquid depth of tank	Mts	2.2

Total depth of the tank	Mts	=2.2 + 1.5 = 3.7
Area required	M2	=18.75/2.2 = 8.52
size of the sewage collection tank provided in design	3.0m x 3.0m x 2.2m LD + 1.5mFB	

Indicative Bill of Quantity for Part # 1 : Raw Sewage Collection Tank

The values provided herein are indicative. Bidder to make his own calculations and modify / retain the same based on his inputs…

A	**Raw Sewage Collection Tank - T 100**		
S. No.	**Description**	**qty**	**Unit**
	SHORING WORKS		
	Providing and doing necessary shoring works to avoid the sliding of earth to inside of tank area.	50	Sqm
	Providing and dewatering using necessary pumps using 1.0 Hp motor and disposal the same outside the boundary	1	L.Sum
A.1.	**EARTH WORK**		
A.1.1	Excavation in all types of soil including dense soil, for mass excavation, footings of columns, retaining walls, core walls, partition walls, catch pits,, trenches for drains, etc., by mechanical means (using JCB, pocliane etc.,) and or manual, including levelling dressing / trimming the edges, with all lead and lifts including back filling in layers of 300mm, watering and compaction. Rate to include disposing excess earth to designated dumping yards and or spreading in layers to the required levels within the site wherever specified. Rate shall be including dewatering of both ground / Rain and surface water, with well point system and removal of slurry generated while excavation and keeping the area free of water. Including all necessary Shoring, strutting, under pinning soil, adequate protection to existing adjacent building super structures etc.	75	cu.m
A.1.2.	Filling available excavated earth (excluding rock) in trenches, plinth, sides of foundations etc. in layers not exceeding 30 cm in depth, consolidating each deposited layer by ramming and watering, lead up to 200 m and lift up to 1.5 m depth.	20	cu.m

A.2.	**SAND / DUST FILLING IN BASEMENT**		
A.2.1	Filling with RIVER SAND / QUARY DUST in plinth in layers not exceeding 30cm in depth, consolidating each deposited layer by ramming and watering.	3	cu.m
A.3	**PLAIN CEMENT CONCRETE**		
A.3.1.	Providing & laying **P.C.C M-20 grade** for foundation & flooring, wall trenches & column footings etc. using 40 mm & down size graded aggregates including machine mixing, tamping, scaffolding etc. For foundations basements and flooring etc.,	3	Cu.m.

S. No.	**Description**	**qty**	**Unit**
A.4	**REINFORCED CEMENT CONCRETE**		
A.4.1	Providing and laying in position machine batched and machine mixed design mix M-30 grade cement concrete for reinforced cement concrete work, using cement content as per approved design mix, with min cement content of 400 Kg. per cum, including pumping of concrete to site of laying but excluding the cost of reinforcement, including admixtures in recommended proportions as per IS: 9103 to accelerate, retard setting of concrete, improve workability without impairing strength and durability as per direction of PMC, and incidental charges complete at all leads and lifts. complete to make sure water tight and rigid support systems in totality.		
	For all RCC works in raft foundations complete	10	cu.m
	For all RCC works in walls for all heights below Ground level and above Ground level.	15	cu.m
A.5	**STEEL REINFORCEMENT**		
A.5.1.	Procuring, cutting, binding and placing in position M.S and HYSD reinforcement in structural members such as footings, columns, beams, slabs, chajjas, walls, lintel beams, pardis as shown in the structural drawing at all level including tools, binding wire, material and labour for all concrete works complete in all respect including the cost of wastages For all RCC works	3	MT

S. No.	Description	qty	Unit
A.6	**SHUTTERING WORKS**		
A.6.1.	Providing and doing Centering & Shuttering propping etc., and removal of forms complete as directed for **plain wall**s and raft foundations at all levels	130	Sq.m
A.7.	**PLASTERING**		
A.7.1.	Preparing and plastering the internal surfaces of Walls with cement mortar 1:5, 12 mm thick with recommended water proofing chemical as admixture complete at all levels including the cost of scaffolding etc.,	60	sq.m
A.7.2	Preparing & plastering the External surfaces of walls with CM 1:5, 12 mm thick. Average sponge finishes directed etc. complete at all levels including the cost of scaffolding etc.,	60	sq.m
A.8	**PAINTING WORKS**		
A.8.1.	Preparing the external plastered surfaces of Walls& applying One coat of primer and 2 or more coats of approved colour& shade supercem as per specifications at all levels including scaffolding, Curing etc. complete.		
	For all plastered surfaces as required	120	sq.m
A.9	**FLOORING WORKS**		
A.9.1.	Providinng and doing Granno flooring of 50mm thick to slope towards Coolection pit in C.C 1:2:4 using floor hardner as admixure, making the floor finish with power Troweller complete as directed.	25	sq.m
A.11	**HAND RAILING WORKS**		
A.11.1.	Providing and doing hand rail works using 40NB medium pipe as vertical at every 1.50m and top horizontal as 40NB medium pipe and 25 NB medium pipe as horizontal at bottom. Height of handrail should be 1.0m. Scope includes providing and fixing necessary insert plates of 75 x 75 x 6mm thick in concrete. scope also includes necessary enamel painting complete.	9	Rmt
A.12	**PVC INSULATED RUNGS**		
A.12.1	Providing and fixing in position PVC insulated rungs ar every 300mm c/c in concrete as directed	10	Nos

Part # 2 : Combined Tanks in treatment process

The combined tanks will have the following partitions:

Tag #	Item	Size
T 101	Effluent Collection Sump	5.0m x 4.5m x 3.0m LD + 0.5m FB
T 102	Combined Waste Water Collection Sump	5.0m x 6.0 m x 3.0m LD + 0.5m FB
T 103 A/B	Aeration Tanks	10.0 m x 7.3 m x 3.0m SWD + 0.5m FB
T 105	Filter Feed Sump	5.0m x 5.0 m x 2.6m LD + 0.9 m FB
T 106	UF feed sump	5.0 m x 4.2 m x 3.0m LD + 0.5m FB
T 108	UF treated water sump	5.0 m x 5.3 m x 3.0m LD + 0.5m FB
T109	RO Stage 1 reject sump	5.7 m x 2.0 m x 3.0m LD + 0.5m FB
T110	RO Stage 2 reject sump	5.7m x 2.0m x 3.0m LD + 0.5m FB
T 111	Treated Water Tank	7.3 m x 6.0 m x 3.0m LD + 0.5m FB
T 113	Backwash Waste Holding Tank	3.5m x 3.4 m x 3.0m LD + 0.5m FB
T 114	Solids Holding Tank	3.5 m x 3.4 m x 3.0m LD + 0.5m FB

This is to be read in conjunction with the Layout drawing….

The design basis and sizing of these tanks are as given below.

Effluent Collection Tank	**T 101**	
main design basis	retention time	
total effluent generated by the Units	m3/day	78.7
rounded off value considered as effluent generation	m3/day	100
minimum retention recommended	hrs	12
minimum capacity of tank needed	m3	**50.00**
Liquid depth in the tank	Mts	3.0
Area required	M2	=66.67/3 =22.22 m2
size of tank provided	5.0m x 4.5m x 3.0m LD + 0.5m FB	

Combined Waste Water Collection Tank	**T 102**	
main design basis	retention time	
total combined waste water - sewage + effluent	m3/day	134.95
total capacity considered for design	m3/day	170
minimum retention desired	hrs	12
minimum capacity of tank needed	m3	**85**
size of the tank provided	5.0m x 6.0 m x 3.0m LD + 0.5m FB	

Aeration Tanks	**T 103 A / B**	
type of aeration system	type	extended
design BOD removal in process	ppm	480
number of tanks in parallel	nos	2
total capability of system to treat	m3/day	340
Design feed flow rate for each Tank…	m3/day	170
Desired F / M	ratio	0.15
Desired MLVSS	ppm	2500
Volume required for aeration in each tank	m3	**217.6**
size of tank	10.0 m x 7.3 m x 3.0m SWD + 0.5m FB	

Filter Feed Tank	**T 105**	
design criteria	retention time	
From secondary clarifier, the treated water from biological process will fall into this tank		
From here, it will be pumped to the sand and carbon filtration systems		
design capacity of waste water generation	m3/day	170
retention desired	hrs	10
minimum volume needed	m3	70.83
size of tank provided	5.0m x 5.5 m x 2.6m LD + 0.9 m FB	

UF Feed tank	**T 106**	
design criteria	retention time	
The outlet from sand & carbon filtration will fall into this tank		
From here, it will be pumped to ultra filtration unit.		
design capacity of waste water generation	m3/day	170
retention desired	hrs	9
volume needed	m3	**63.75**
size of tank	5.0 m x 4.5 m x 3.0m LD + 0.5m FB	

UF treated water tank	**T 108**	
design criteria	retention time	
The product from UF process will fall into this tank		
From here it will be pumped to the R.O. process.		
design capacity of waste water generation	m3/day	170
retention desired	hrs	10
volume needed	m3	**70.83**
size of tank	5.0 m x 5.0 m x 3.0m LD + 0.5m FB	
Actual volume provided	M3	**75.0**
RO stage 1 reject tank	**T 109**	
design criteria	retention time	
The REJECT from Stage 1 will be taken to this tank.		

There are 2 R.O. streams in Stage 1. Each has the capacity to handle 170 m3/d of feed i.e. full load condition. For design of this tank, it is assumed that BOTH the plants are operational at the same time and the quantity of reject generated is calculated accordingly. This reject from both the plants will fall into this tank and from here, it will be pumped to Stage 2		
Total reject generated (by both plants fully operational)	m3/hr	6.0

minimum retention desired	hrs	5.0
(NOTE: This 5 hours retention will translate in actual practice to 10 hours of retention, as only one plant is likely to be operational… However, the design has been done to accommodate the flow from BOTH R.O. plants being operational at the same time, due to any emergency conditions)		
volume needed	m3	**30.0**
size of tank	5.0 m x 2.0 m x 3.0m LD + 0.5m FB	

RO stage 2 reject tank	**T 110**	
design criteria	retention time	
The REJECT from Stage 2 will be taken to this tank. From here, it will be sent to the oxidation pond area for natural evaporation. This retention is only to create a temporary storage facility and will have nothing to do with the process.		
Reject quantity / day at full load (phase 1 + phase 2) in stage 2	M3/d	60.0
retention desired	hrs	5
volume needed	m3	**12.5**
size of tank	5.0 m x 2.0m x 3.0m LD + 0.5m FB	
Final treated water storage tank	**T 111**	
design criteria	retention time	
the total permeate from stage 1 and stage 2 will be led into this storage tank.		
from here, it will be pumped through HNS to delivery points		
designed for full load - i.e. total of 170 m3/day x 2 plants = 340 m3/day		
Total Product (for 340 m3/day)	m3/day	280.0
retention desired	hrs	10.0
volume needed for this retention	m3	**116.7**
size of tank	7.3 m x 6.0 m x 3.0m LD + 0.5m FB	
All Backwash Waste Collection Tank	**T 113**	
design criteria	retention time	
Backwash from Sand Filter & Carbon Filter will collect in this tank.		
from here, it will be pumped through tube settlers to the common effluent collection tank		

waste / day from Sand & Carbon Filters - taken at both the plants under operation at the same time…i.e. for full load condition of 170 m3/day x 2 = 340 m3/day	m3	28.0
retention desired	hrs	12.0
volume needed for this retention	m3	**14.0**
size of tank	3.5m x 3.4 m x 3.0m LD + 0.5m FB	

Solids Holding Tank		**T 114**	
design criteria	total solids generation + % w/v of solution		
E Process Solids Waste:			
Total solids load to inlet of E Process :		kgs / day	
Total Suspended Solids		kgs / day	238.0
Total Organic Load (BOD contribution)		kgs / day	376.0
Total 100% dry solids load to E process inlet		kgs / day	614.0
% removal of TSS & BOD in E Process		%	70.0
Solids in Froth and Tube Settler		kgs / day	429.8
typical strength of solution		% w / v	1.2
Quantum of liquid waste		liters / day	35816.7
		m3/d	35.8
Bio Process Solids Waste:			
BOD contribution of sewage		kgs / day	28.0
TSS contribution of sewage		kgs / day	56.0
BOD contribution of E process outlet to bio process		kgs / day	184.2
total solids in bio process		kgs / day	268.2
typical strength of solution		% w / v	1.2
Quantum of liquid waste		liters / day	22350.0
		m3/d	22.4
Note: Sand Filter & Carbon filter backwash waste also taken into account on total TSS load.			
Volume of tank required		m3	**29.1**
size of tank	3.5 m x 3.4 m x 3.0m LD + 0.5m FB		

Indicative Bill of Quantity for Combined Tanks:

S. No.	Description	qty	Unit
	SHORING WORKS		
	Providing and doing necessary shoring works to avoid the sliidng of earth to inside of tank area.	350	Sqm
	Providing and dewatering using necessary pumps using 1.0 Hp motor and disposal the same outside the boundary	1	L.Sum
	Providing and removal of slush form th site by mannual etc complete.	450	Sqm
A.1.	**EARTH WORK**		
A.1.1	Excavation in all types of soil including dense soil, for mass excavation, footings of columns, retaining walls, core walls, partition walls, catch pits,, trenches for drains, etc., by mechanical means (using JCB, pocliane etc.,) and or manual, including levelling dressing / trimming the edges, with all lead and lifts including back filling in layers of 300mm, watering and compaction. Rate to include disposing excess earth to designated dumping yards and or spreading in layers to the required levels within the site wherever specified. Rate shall be including dewatering of both ground / Rain and surface water, with well point system and removal of slurry generated while excavation and keeping the area free of water. Including all necessary Shoring, strutting, under pinning soil, adequate protection to existing adjacent building super structures etc.	1000	cu.m
A.1.2.	Filling available excavated earth (excluding rock) in trenches, plinth, sides of foundations etc. in layers not exceeding 30 cm in depth, consolidating each deposited layer by ramming and watering, lead up to 200 m and lift up to 1.5 m depth.	800	cu.m
A.2.	**SAND / DUST FILLING IN BASEMENT**		
A.2.1	Filling with RIVER SAND / QUARY DUST in plinth in layers not exceeding 30cm in depth, consolidating each deposited layer by ramming and watering.	40	cu.m
A.3	**PLAIN CEMENT CONCRETE**		
A.3.1.	Providing & laying **P.C.C M 20 grade** for foundation & flooring, wall trenches & column footings etc. using 40 mm & down size graded aggregates including machine mixing, tamping, scaffolding etc.		
	For foundations basements and flooring etc.,	25	cu.m

S. No.	Description	qty	Unit
A.4	**REINFORCED CEMENT CONCRETE**		
A.4.1	Providing and laying in position machine batched and machine mixed design mix M-30 grade cement concrete for reinforced cement concrete work, using cement content as per approved design mix, with min cement content of 400 Kg. per cum, including pumping of concrete to site of laying but excluding the cost of reinforcement, including admixtures in recommended proportions as per IS: 9103 to accelerate, retard setting of concrete, improve workability without impairing strength and durability as per direction of PMC, and incidental charges complete at all leads and lifts. complete to make sure water tight and rigid support systems in totality.		
	For all RCC works in raft foundations complete	190	cu.m
	For all RCC works in walls for all heights below Ground level and above Ground level.	230	cu.m
	For all RCC works in launder base slab / walls / walkway platforms at all levels complete	110	Cum
A.5	**STEEL REINFORCEMENT**		
A.5.1.	Procuring, cutting, binding and placing in position M.S and HYSD reinforcement in structural members such as footings, columns, beams, slabs, chajjas, walls, lintel beams, pardis as shown in the structural drawing at all level including tools, binding wire, material and labour for all concrete works complete in all respect including the cost of wastages For all RCC works	48	MT

S. No.	Description	qty	Unit
A.6	**SHUTTERING WORKS**		
A.6.1.	Providing and doing Centering & Shuttering propping etc., and removal of forms complete as directed for **plain wall**s and raft foundations at all levels	3000	Sq.m
A.7.	**PLASTERING**		
A.7.1.	Preparing and plastering the internal surfaces of Walls with cement mortar 1:5, 12 mm thick with recommended water proofing chemical as admixture complete at all levels including the cost of scaffolding etc.,	2200	sq.m
A.7.2	Preparing & plastering the External surfaces of walls with CM 1:5, 12 mm thick. Average sponge finishes directed etc. complete at all levels including the cost of scaffolding etc.,	750	sq.m
A.8	**PAINTING WORKS**		
A.8.1.	Preparing the external plastered surfaces of Walls& applying One coat of primer and 2 or more coats of approved colour& shade supercem as per specifications at all levels including scaffolding, Curing etc. complete.		
	For all plastered surfaces as required	3500	sq.m
A.9	**FLOORING WORKS**		
A.9.1.	Providinng and doing Granno flooring of 50mm thick to slope towards Collection pit in C.C 1:2:4 using floor hardner as admixure, making the floor finish with power Troweller complete as directed.	1000	sq.m
S. No.	**Description**	**qty**	**Unit**
A.11	**HAND RAILING WORKS**		
A.11.1.	Providing and doing hand rail works using 40NB medium pipe as vertical at every 1.50m and top horizontal as 40NB medium pipe and 25 NB medium pipe as horizontal at bottom. Height of handrail should be 1.0m. Scope includes providing and fixing necessary insert plates of 75 x 75 x 6mm thick in concrete. scope also includes necessary enamel painting complete.	120	Rmt

A.12	**PVC INSULATED RUNGS**		
A.12.1	Providing and fixing in position PVC insulated rungs ar every 300mm c/c in concrete as directed	25	Nos

Part # 3 : Secondary Clarifier Tank (circular tank to be constructed separately)

Secondary Clarifier Tank		**T 104**	
main design basis	surface overflow rate (m3/d / sq.m. of clarifier area) & retention time…		
combined waste water generated by Units		m3/day	134.95
quantity taken for design consideration		m3/day	170
maximum quantity taken (when both aeration process is working together		m3/day	340
design surface loading rate		m3 / d / m2	15
minimum area required for process		m2	22.67
diameter required as per above criteria		m	5.4
diameter provided		m	6
area now available		m2	36
Hence, criteria of surface overflow rate is adequately satisfied.			
minimum retention desired		hrs	2.5
minimum volume required for this retention (calculated at 340 KLD i.e. both aeration processes are working)		m3	35.42
hence minimum liquid depth required to achieve this volume		m	1.0
Note: At only 1 mts depth, proper settling will not take place. Hence, minimum side water depth criteria is now applied.			
side water depth provided		m	2

hopper depth vertical + sludge holding compartment vertical depth	m	0.8
free board	m	0.7
total depth	m	3.5
number of such tanks	nos	1
size of secondary clarifier	**6.0m dia x 2.8m LD + 0.7m FB**	

A	**SECONDARY CLARIFIER -01 Indicative Bill of Quantity**		
S. No.	**Description**	**Qty**	**Unit**
	SHORING WORKS		
	Providing and doing necessary shoring works to avoid the sliidng of earth to inside of tank area.	50	Sqm
	Providing and dewatering using necessary pumps using 1.0 Hp motor and disposal the same outside the boundary	1	L.Sum
A.1.	**EARTH WORK**		
A.1.1	Excavation in all types of soil including dense soil, for mass excavation, footings of columns, retaining walls, core walls, partition walls, catch pits,, trenches for drains, etc., by mechanical means (using JCB, pocliane etc.,) and or manual, including levelling dressing / trimming the edges, with all lead and lifts including back filling in layers of 300mm, watering and compaction. Rate to include disposing excess earth to designated dumping yards and or spreading in layers to the required levels within the site wherever specified. Rate shall be including dewatering of both ground / Rain and surface water, with well point system and removal of slurry generated while excavation and keeping the area free of water. Including all necessary Shoring, strutting, under pinning soil, adequate protection to existing adjacent building super structures etc.	100	cu.m
A.1.2.	Filling available excavated earth (excluding rock) in trenches, plinth, sides of foundations etc. in layers not exceeding 30 cm in depth, consolidating each deposited layer by ramming and watering, lead up to 200 m and lift up to 1.5 m depth.	30	cu.m

S. No.	Description	Quantity	Unit
A.2.	**SAND / DUST FILLING IN BASEMENT**		
A.2.1	Filling with RIVER SAND / QUARY DUST in plinth in layers not exceeding 30cm in depth, consolidating each deposited layer by ramming and watering.	8	cu.m
A.3	**PLAIN CEMENT CONCRETE**		
A.3.1.	Providing & laying **P.C.C M-20 grade** for foundation & flooring, wall trenches & column footings etc. using 40 mm & down size graded aggregates including machine mixing, tamping, scaffolding etc.		
	For foundations basements and flooring etc.,	5	cu.m
A.4	**REINFORCED CEMENT CONCRETE**		
A.4.1	Providing and laying in position machine batched and machine mixed design mix M-30 grade cement concrete for reinforced cement concrete work, using cement content as per approved design mix, with min cement content of 400 Kg. per cum, including pumping of concrete to site of laying but excluding the cost of reinforcement, including admixtures in recommended proportions as per IS: 9103 to accelerate, retard setting of concrete, improve workability without impairing strength and durability as per direction of PMC, and incidental charges complete at all leads and lifts. complete to make sure water tight and rigid support systems in totality.		
	For all RCC works in raft foundations complete	12	cu.m
	For all RCC works in walls for all heights below Ground level and above Ground level.	20	cu.m

S. No.	Description	Quantity	Unit
A.5	**STEEL REINFORCEMENT**		
A.5.1.	Procuring, cutting, binding and placing in position M.S and HYSD reinforcement in structural members such as footings, columns, beams, slabs, chajjas, walls, lintel beams, pardis as shown in the structural drawing at all level including tools, binding wire, material and labour for all concrete works complete in all respect including the cost of wastages For all RCC works	3.5	MT
A.6	**SHUTTERING WORKS**		
A.6.1.	Providing and doing Centering & Shuttering propping etc., and removal of forms complete as directed for **Circular wall**s and raft foundations at all levels	180	Sq.m
A.7.	**PLASTERING**		
A.7.1.	Preparing and plastering the internal surfaces of Walls with cement mortar 1:5, 12 mm thick with recommended water proofing chemical as admixture complete at all levels including the cost of scaffolding etc.,	70	sq.m
A.7.2	Preparing & plastering the External surfaces of walls with CM 1:5, 12 mm thick. Average sponge finishes directed etc. complete at all levels including the cost of scaffolding etc.,	80	sq.m
A.8	**PAINTING WORKS**		
A.8.1.	Preparing the external plastered surfaces of Walls& applying One coat of primer and 2 or more coats of approved colour& shade supercem as per specifications at all levels including scaffolding, Curing etc. complete.		
	For all plastered surfaces as required	150	sq.m

S. No.	Description	Quantity	Unit
A.9	**FLOORING WORKS**		
A.9.1.	Providinng and doing Granno flooring of 50mm thick to slope towards Coolection pit in C.C 1:2:4 using floor hardner as admixure, making the floor finish with power Troweller complete as directed.	30	sq.m
A.11	**HAND RAILING WORKS**		
A.11.1.	Providing and doing hand rail works using 40NB medium pipe as vertical at every 1.50m and top horizontal as 40NB medium pipe and 25 NB medium pipe as horizontal at bottom. Height of handrail should be 1.0m. Scope includes providing and fixing necessary insert plates of 75 x 75 x 6mm thick in concrete. scope also includes necessary enamel painting complete.	18	Rmt
A.12	**PVC INSULATED RUNGS**		
A.12.1	Providing and fixing in position PVC insulated rungs ar every 300mm c/c in concrete as directed	10	Nos
	Fixing with 15x3 mm lugs 10 cm long embedded in cement concrete block 15x10x10 cm of c.c. 1:3:6(1 cement:3 coarse sand :6 graded stone aggregate 20 mm nominal size)		

Part # 4 : Pre Engineered Building above the tanks to house the Plant & Machinery

The Pre Engineered Building will house the following:

- Equipment
- MCC and DG set
- Reception, Office, Stores, Lab
- The specifications of the PEB is provided in the Bill of Quantity enclosed herein
- The size of the PEB will be 30m x 13m x 3.5m ht

Please refer the relevant drawings for more information.

The indicative Bill of Quantity is produced below. Please refer the relevant drawings for more information

The Shed will have ONE ROLLING SHUTTER provision for movement of materials and equipment

The Shed will have TWO ENTRY/EXIT points through access staircase.

The following facilities will be provided in the Stores:

- One office space arrangement for two people to sit and work
- One 250 kgs capacity hand operated trolley for movement of material
- One 1000 kgs weighing machine

Laboratory will have access from the Plant area only.

A	**PEB building on top of the combined units**		
S. No.	**Description**	**Quantity**	**Unit**
A.1.	**PEB works**		
A.1.1	Providing and doing with MS angles and tubler structure on top of the existing combined units of Aeration tanks and other structures. The height of the PEB structure should be 4.0m from top of the finished flooor of the combined units. The cost inclusive of all necessary structural designing of PEB structure, all materials including labour, tools and tackles. The rate also inclusive of necessary painting complete. The area of the building is **30m x 13m x 3.5m ht**	390	Sqm
A.1.2.	Providing and doing Flooring works with ceramic tiles complete of size 450 x 450mm. All rates inclusive of labor and materials complete.	390	Sqm

Part 5: Peripheral Works – Compound Wall and In Plant Road

Perimeter compound wall with ENTRY & EXIT gates will be provided. Please refer relevant civil drawing provided in this DPR.

The site is to have proper drain arrangements to discharge the accumulated rain water

Suitable landscaping to be provided wherever possible within the perimeter wall.area

A	**Compound wall works- 120.0 Rmts**		
S. No.	**Description**	**Quantity**	**Unit**
A.1.	**Piling works**		
A.1.1	Providing and doing ceat insitu bored driven piles of 9" dia to adepth of 3.5m. The rate inclusive of all necessary tools and tackles complete including all materials for concreteing (cement/20mm / riversand) complete, excluding the cost of reinforcement complete.	60	nos
A.1.2.	Excavation in all types of soil including dense soil, for mass excavation, footings of columns, footings complete	20	cu.m
A.3	**PLAIN CEMENT CONCRETE**		
A.3.1.	Providing & laying **P.C.C M20 grade** for foundation & flooring, wall trenches & column footings etc. using 40 mm & down size graded aggregates including machine mixing, tamping, scaffolding etc.		
	For foundations basements and flooring etc.,	8	cu.m

S. No.	Description	Quantity	Unit
A.4	**REINFORCED CEMENT CONCRETE**		
A.4.1	Providing and laying in position machine batched and machine mixed design mix M-30 grade cement concrete for reinforced cement concrete work, using cement content as per approved design mix, with min cement content of 400 Kg. per cum, including pumping of concrete to site of laying but excluding the cost of reinforcement, including admixtures in recommended proportions as per IS: 9103 to accelerate, retard setting of concrete, improve workability without impairing strength and durability as per direction of PMC, and incidental charges complete at all leads and lifts. complete to make sure water tight and rigid support systems in totality.		
	For all RCC works in raft foundations complete	12	cu.m
	For all RCC works in walls for all heights below Ground level and above Ground level.	12	cu.m
A.5	**STEEL REINFORCEMENT**		
A.5.1.	Procuring, cutting, binding and placing in position M.S and HYSD reinforcement in structural members such as footings, columns, beams, slabs, chajjas, walls, lintel beams, pardis as shown in the structural drawing at all level including tools, binding wire, material and labour for all concrete works complete in all respect including the cost of wastages For all RCC works	2	MT
A.6	**SHUTTERING WORKS**		
A.6.1.	Providing and doing Centering & Shuttering propping etc., and removal of forms complete as directed for **plain wall**s and raft foundations at all levels	250	Sq.m
	Providing and doing block work of 115mm width in C:M 1:5 including all necessary materials complete	350	Sqm
A.7.	**PLASTERING**		
A.7.1.	Preparing and plastering the internal surfaces of Walls with cement mortar 1:5, 12 mm thick with recommended water proofing chemical as admixture complete at all levels including the cost of scaffolding etc.,	900	sq.m

S. No.	Description	Quantity	Unit
A.8	**PAINTING WORKS**		
A.8.1.	Preparing the external plastered surfaces of Walls& applying One coat of primer and 2 or more coats of approved colour& shade supercem as per specifications at all levels including scaffolding, Curing etc. complete.		
	For all plastered surfaces as required	900	sq.m
	Providing and doing Main Gate of 8.0m wide as per design complete	1200	Kg

In Plant Road Works - Bill of Quantity

A	**ROAD WORKS (178.0 Sq.m)**		
S. No.	**Description**	**Quantity**	**Unit**
A.1.	EARTH WORK		
A.1.1	Excavation in all types of soil including dense soil, for mass excavation, footings of columns, retaining walls, core walls, partition walls, catch pits,, trenches for drains, etc., by mechanical means (using JCB, pocliane etc.,) and or manual, including levelling dressing / trimming the edges, with all lead and lifts including back filling in layers of 300mm, watering and compaction. Rate to include disposing excess earth to designated dumping yards and or spreading in layers to the required levels within the site wherever specified. Rate shall be including dewatering of both ground / Rain and surface water, with well point system and removal of slurry generated while excavation and keeping the area free of water. Including all necessary Shoring, strutting, under pinning soil, adequate protection to existing adjacent building super structures etc.	100	cu.m
A.2.	WBM		
A.2.1	Filling with GSB of 1200mm depth in layers not exceeding 30cm in depth, consolidating each deposited layer by ramming and watering.	250	cu.m

S. No.	Description	Quantity	Unit
A.3	PLAIN CEMENT CONCRETE		
A.3.1.	Providing & laying P.C.C M-20 grade for foundation & flooring, wall trenches & column footings etc. using 40 mm & down size graded aggregates including machine mixing, tamping, scaffolding etc.		
	For foundations basements and flooring etc.,	25	cu.m
A.5	STEEL REINFORCEMENT		
A.5.1.	Procuring, cutting, binding and placing in position M.S and HYSD reinforcement in structural members such as footings, columns, beams, slabs, chajjas, walls, lintel beams, pardis as shown in the structural drawing at all level including tools, binding wire, material and labour for all concrete works complete in all respect including the cost of wastages For all RCC works	2	MT
A.6	SHUTTERING WORKS		
A.6.1.	Providing and doing Centering & Shuttering propping etc., and removal of forms complete as directed for Circular walls and raft foundations at all levels	50	Sq.m

CONVEYANCE SYSTEM – Civil Bill of Quantity

All information provided herein is only indicative and may change during detailed engineering.

A	**Conveying System**			**Total amount**	
S. No.	**Description**	**Quantity**	**Unit**	**Rate, Rs.**	**Amount, Rs.**
A.1.	**EARTH WORK**				
A.1. 1	Excavation in all types of soil including dense soil, for mass excavation, footings of columns, retaining walls, core walls, partition walls, catch pits,, trenches for drains, etc., by mechanical means (using JCB, pocliane etc.,) and or manual, including levelling dressing / trimming the edges, with all lead and lifts including back filling in layers of 300mm, watering and compaction. Rate to include disposing excess earth to designated dumping yards and or spreading in layers to the required levels within the site wherever specified. Rate shall be including dewatering of both ground / Rain and surface water, with well point system and removal of slurry generated while excavation and keeping the area free of water. Including all necessary Shoring, strutting, under pinning soil, adequate protection to existing adjacent building super structures etc.	800	cu.m		
A.1. 2.	Filling available excavated earth (excluding rock) in trenches, plinth, sides of foundations etc. in layers not exceeding 30 cm in depth, consolidating each deposited layer by ramming and watering, lead up to 200 m and lift up to 1.5 m depth.	525	cu.m		
A.2.	**SAND / DUST FILLING IN BASEMENT**				
A.2. 1	Filling with RIVER SAND / QUARY DUST in plinth in layers not exceeding 30cm in depth, consolidating each deposited layer by ramming and watering.	275	cu.m		

S. No.	Description	Quantity	Unit	Rate, Rs.	Amount, Rs.
	Providing and doing shoring for the sides of of trenches as required	500	Sqm		
	Doing road cutting and redoing the same	25	Cum		
	Labourcharges for the erection of conveying pipe line.	2300	Rmts		
	Sub Total 1 for Conveying System				
A.3	**Construction of Manholes - 600mm x 600mm**				
	Providing and doing Manholes of 600mm x 600mm at every 30m intervals, with the following specifications				
	1. Min depth of manholes should be 450mm	60	Nos		
	2. PCC of 100mm to be done below Raft concrete.				
	REINFORCED CEMENT CONCRETE of 100mm above PCC				
	Brick work in C.M 1:5 of 230mm width & plastering the sides of brickwork in c.m 1:4				
	Top cover slab with RCC				
	RCC coverslab				
A4	**providing necessary barricade and safety arrangement along the pipe routing.**		LS		

Intermediate Sump – 20,000 liters hold up volume

A	**Intermdiate sump**			**Total amount**	
S. No.	**Description**	**Quantity**	**Unit**	**Rate, Rs.**	**Amount, Rs.**
A.1.	**EARTH WORK**				
A.1.1	Excavation in all types of soil including dense soil, for mass excavation, footings of columns, retaining walls, core walls, partition walls, catch pits,, trenches for drains, etc., by mechanical means (using JCB, pocliane etc.,) and or manual, including levelling dressing / trimming the edges, with all lead and lifts including back filling in layers of 300mm, watering and compaction. Rate to include disposing excess earth to designated dumping yards and or spreading in layers to the required levels within the site wherever specified. Rate shall be including dewatering of both ground / Rain and surface water, with well point system and removal of slurry generated while excavation and keeping the area free of water. Including all necessary Shoring, strutting, under pinning soil, adequate protection to existing adjacent building super structures etc.	110	cu.m		
A.1.2.	Filling available excavated earth (excluding rock) in trenches, plinth, sides of foundations etc. in layers not exceeding 30 cm in depth, consolidating each deposited layer by ramming and watering, lead up to 200 m and lift up to 1.5 m depth.	20	cu.m		
A.2.	**SAND / DUST FILLING IN BASEMENT**				
A.2.1	Filling with RIVER SAND / QUARY DUST in plinth in layers not exceeding 30cm in depth, consolidating each deposited layer by ramming and watering.	10	cu.m		

S. No.	Description	Quantity	Unit	Rate, Rs.	Amount, Rs.
A.3	**PLAIN CEMENT CONCRETE**				
A.3.1.	Providing & laying **P.C.C 1:2:4** bed for foundation & flooring, wall trenches & column footings etc. using 40 mm & down size graded aggregates including machine mixing, tamping, scaffolding etc.				
	For foundations basements and flooring etc.,	5	cu.m		
A.4	**REINFORCED CEMENT CONCRETE**				
A.4.1	Providing and laying in position machine batched and machine mixed design mix M-25 grade cement concrete for reinforced cement concrete work, using cement content as per approved design mix, with min cement content of 360 Kg. per cum, including pumping of concrete to site of laying but excluding the cost of reinforcement, including admixtures in recommended proportions as per IS: 9103 to accelerate, retard setting of concrete, improve workability without impairing strength and durability as per direction of PMC, and incidental charges complete at all leads and lifts. complete to make sure water tight and rigid support systems in totality.				
	For all RCC works in raft foundations complete	12	cu.m		
	For all RCC works in walls for all heights below Ground level and above Ground level.	20	cu.m		

S. No.	Description	Quantity	Unit	Rate, Rs.	Amount, Rs.
A.5	**STEEL REINFORCEMENT**				
A.5.1.	Procuring, cutting, binding and placing in position M.S and HYSD reinforcement in structural members such as footings, columns, beams, slabs, chajjas, walls, lintel beams, pardis as shown in the structural drawing at all level including tools, binding wire, material and labour for all concrete works complete in all respect including the cost of wastages For all RCC works	5	MT		
A.6	**SHUTTERING WORKS**				
A.6.1.	Providing and doing Centering & Shuttering propping etc., and removal of forms complete as directed for **Circular wall**s and raft foudnations at all levels	160	Sq.m		
A.7.	**PLASTERING**				
A.7.1.	Preparing and plastering the internal surfaces of Walls with cement mortar 1:5, 12 mm thick with recommended water proofing chemical as admixture complete at all levels including the cost of scaffolding etc.,	60	sq.m		
A.7.2	Preparing & plastering the External surfaces of walls with CM 1:5, 12 mm thick. Average sponge finishes directed etc. complete at all levels including the cost of scaffolding etc.,	70	sq.m		
A.8	**PAINTING WORKS**				
A.8.1.	Preparing the external plastered surfaces of Walls& applying One coat of primer and 2 or more coats of approved colour& shade supercem as per specifications at all levels including scaffolding, Curing etc. complete.				
	For all plastered surfaces as required	150	sq.m		

S. No.	Description	Quantity	Unit	Rate, Rs.	Amount, Rs.
A.9	**FLOORING WORKS**				
A.9.1.	Providinng and doing Granno flooring of 50mm thick to slope towards Coolection pit in C.C 1:2:4 using floor hardner as admixure, making the floor finish with power Troweller complete as directed.	25	sq.m		
A.11	**HAND RAILING WORKS**				
A.11.1.	Providing and doing hand rail works using 40NB medium pipe as vertical at every 1.50m and top horizontal as 40NB medium pipe and 25 NB medium pipe as horizontal at bottom. Height of handrail should be 1.0m. Scope includes providing and fixing necessary insert plates of 75 x 75 x 6mm thick in concrete. scope also includes necessary enamel painting complete.	10	Rmt		
A.12	**PVC INSULATED RUNGS**				
A.12.1	Providing and fixing in position PVC insulated rungs ar every 300mm c/c in concrete as directed	5	Nos		
	Fixing with 15x3 mm lugs 10 cm long embedded in cement concrete block 15x10x10 cm of c.c. 1:3:6(1 cement:3 coarse sand :6 graded stone aggregate 20 mm nominal size)				

GENERAL SPECIFICATIONS – CIVIL WORKS

DESIGN PHILOSOPHY – CIVIL & STRUCTURAL WORKS

PROJECT: COMMON EFFLUENT TREATMENT PLANT FOR CPIIUC, ALATHUR

CONTENTS

SL. NO.	DESCRIPTION
1	DESIGN PHILOSOPHY FOR CIVIL & STRUCTURAL WORK
2	CIVIL ENGINEERING DESIGN BASIS (GENERAL CIVIL)
3	CIVIL ENGINEERING DESIGN BASIS (STRUCTURAL)
4	ES -2516 : TECHNICAL SPECIFICATION FOR CIVIL, STRUCTURAL & ALLIED WORKS
5	ES-2517 : TECHNICAL SPECIFICATION FOR WATER SUPPLY, DRAINAGE & SANITATION
6	QUALITY ASSURANCE PLAN

INDEX

	GENERAL DESCRIPTION OF SCOPE
1.	Detailed Scope of Work
1.1	**Soil Investigation**
1.2	**Topographical / Contour Survey**
1.3	**Grading**
1.4	**Disposal of Surplus Earth**
1.5	**Site Cleaning**
1.6	**Roads**
1.7	**Surface Drainage**
1.8	**Contaminated Rain Water Sewer (CRWS) System**
1.9	**Sewage Disposal Scheme**
1.10	**Paving**
1.11	**Structures, Buildings etc.**
1.12	**Fire Proofing**
1.13	**Surface Finishing**
1.14	**Acid / Alkali Proof Lining**
1.15	**Anti-termite Treatment / Damp Proof Course / Water Proofing**
1.16	**Miscellaneous**
1.17	**Engineering and Construction**
1.18	**Existing Facilities**
1.19	**Rerouting of Underground Facilities**

1.20	**Removal of under ground and above ground structures**
1.21	**Transfer of Benchmark**
1.22	**Sizing of Various Facilities**
1.23	**Scope of Work in Outside Battery Limit (OSBL) Area**
1.24	**Rules and Regulations**
2.	DETAILED ENGINEERING
2.1	**General**
2.2	**Design Calculations**
2.3	**Drawings**
3.	CONSTRUCTION
3.1	**General**

GENERAL DESCRIPTION OF SCOPE

The Contractor shall be responsible for preparation of total design engineering and construction drawings for all Civil, Structural and other Allied Works associated with the Effluent Treatment System and getting the design and drawings approved by the Owner/PMC. The design and drawings shall be made as per provisions of relevant Indian Codes / Standards.

The scope of Civil and Structural works under this Contract shall include carrying out Grading & Leveling, Detailed Design, Drawings, Supply, Procurement of all materials, Construction, Demolitions, Supervision of all relevant Civil and Structural Works including providing all labour, supervision, material, scaffolding, construction equipment, tools, tackles and plants, supplies, transportation, all incidental items though not indicated or specified but reasonably implied or necessary for successful completion of the project.

The Tentative sizes of various structures have been provided in the Plot Plan attached for reference.

Type of Structure	Materials of Construction
Tanks of ETP (approx 14 Nos.)	RCC
Piperacks,Platforms,sheds	Structural Steel
Support structures for Effluent Conveyance pipeline & Treated Water Pipeline	Structural Steel/ RCC
Intermediate Sump of 20000 litres capacity	RCC
Equipment Shed	Structural Steel
Plant & Machinery Building	Structural Steel
Roads	As per Technical Specifications
Landscaping inside plant area	As per MoEF Norms
Perimeter Compound Wall	RCC with hollow/solid block work
Drainage System	As per Technical Specifications
Sewage System	As per Technical Specifications

Scope of the CONTRACTOR shall include but not limited to the following:-

a) Engineering related to site leveling & preparation.
b) Soil Investigation
c) Preparation of concept notes for design, engineering & construction.
d) Structural Analysis and design calculations as per specifications laid down in Civil Engineering Design Basis, enclosed in the tender. for all Civil works including but not limited to pile, pile-cap, foundation, plinth beam, RC superstructure, steel super structure, trenches, drains, pits etc.
e) Architectural design and drawings including details for doors, windows, partitions, false floor, false ceiling, toilet, finishes etc.
f) General Arrangement and detail drawings for pile, pile-cap, foundations, plinth beams etc, based on the soil investigation carried out by the bidder for the proposed site.
g) General Arrangement and structural drawings at grade level showing foundations, extent of paving trenches, drains, pits etc.
h) General Arrangement and Structural drawings for superstructure (RCC or structural steel) at all levels.
i) RCC drawings showing all necessary details for all foundations and structures.
j) Structural steel detail drawings for all steel structures.
k) General Arrangement and detail drawings for access roads, storm water drains, effluent drains, cable trenches, sewerage, manholes, pits, sumps with all necessary details.
l) Effluent Treatment Plants within battery limit.
m) Bar Bending Schedules for all RCC works.
n) Fabrication drawings with all details for steel structures.
o) Coordination with OWNER / PMC for various activities including approvals of design basis, concept note, drawing, material sample, etc.
p) Procurement of all items necessary for completion of scope of work.
q) Construction of all units / structures, items of work included in scope of work.
r) Statutory Approvals.

The Contractor shall inspect and examine the site and its surrounding and shall satisfy himself before submitting his bid as to the nature of the ground and subsoil, the form and nature of the site, the quantum and the nature of work and material necessary for successful completion of the works and the means of access to site and in general shall himself obtain all necessary information as to risks, contingencies and other circumstances which may influence or affect his Tender. Under no circumstances, extra payment consequent on any misunderstanding or otherwise on the part of the Contractor shall be allowed.

In the event of conflict between the requirements of two or more clauses of the specifications/ Documents, the more stringent requirement as per the interpretation of the Owner/ Consultant shall prevail.

1. DETAILED SCOPE OF WORK

1.2. Soil Investigation

1.1.1 Summary / Recommendation of Geo Technical Investigation work is being attached for reference only. Soil investigation to be carried out by the Contractor for specific design purpose.

1.1.2 The CONTRACTOR shall adopt pile foundation, open type isolated or raft foundations as per foundation requirements of structure based on the Geo-technical Report, loads, settlement & other design criteria with no extra cost to OWNER / Project Management Consultant (PMC).

1.2 Topographical / Contour Survey

The Topographical Survey work is to be carried out by the Contractor.

The CONTRACTOR shall establish the finished grade levels after studying the existing site conditions, high flood level so as to maintain proper efficient drainage of the plant area at no extra cost to OWNER / PMC. These grade levels shall be approved by the OWNER / PMC.

At bidding stage, the CONTRACTOR shall visit the site and study the existing site conditions & existing structures, etc.

1.2.1 Site Conditions

Levels like Finished Ground Level (FGL) and Highest Point of Paving (HPP) shall be finalized by the CONTRACTOR in consultation with OWNER / PMC based on contour survey of the unit, levels of adjacent units and levels of adjacent roads.

1.2.2 Site Conditions – Road Levels

The CONTRACTOR shall carryout contour survey of roads adjacent to the unit and also roadways around the unit as defined in plot plan drawing.

1.3 Grading

The CONTRACTOR shall be responsible for planning, designing, reshaping and contouring the site to final grade elevations after study and verification of existing site conditions.

The CONTRACTOR shall perform earthwork, excavation and filling to arrive at finished grade level. For the purpose of grading the CONTRACTOR'S scope is not limited only up to the Unit Battery Limit, but to be extended up to the adjacent roads around the unit.

Wherever filling / cutting is involved stone pitching shall be provided as slope protection to protect the areas.

1.4 Disposal of surplus earth

The CONTRACTOR shall dispose-off all surplus and unserviceable earth (if any), outside the plant in accordance to local Governing authority, at his own cost with the consent of OWNER.

Disposal shall be done at a place outside the plant, with the consent of the OWNER. Location of disposal area shall be decided by the CONTRACTOR and the required necessary approvals from the local bodies shall be the CONTRACTOR's responsibility.

1.5 Site cleaning

During construction and on completion of construction (inclusive all internal and external finishes), cleaning all the debris, waste materials scattered in and around the site and disposal of the same shall be in the scope of the CONTRACTOR with the consent of the OWNER.

Boundary wall & Entrance Gates

Boundary wall of RCC framed hollow block work with RCC plank panels having 2.1 m height with 0.6 m barbed wire fencing is to be provided all around the Plant area.

Motorized and sliding steel gates should be provided at entrance. The size and no's of entrances should be as per the Plot plan or with consultation with Owner/PMC.

1.6 Roads

The CONTRACTOR shall be responsible for complete planning and construction of the roads for access to all buildings and units of the plant from the existing roads including necessary tie-in connections. All works associated with shifting of Roads and related services (e.g. all type of drainages, culverts etc.) as required, for the proposed site, shall be in the scope of contractor.

1.7 Surface Drainage

The CONTRACTOR shall ensure proper drainage of all components of the Plant. For the purpose of drainage the Contractor's scope is not limited only up to the Unit Battery Limit but shall extend up to the adjacent drainage network around the unit. The CONTRACTOR shall provide proper drainage system for all roads mentioned in the above Para 1.6. Storm Water Drains shall be connected to the existing drainage system by providing suitable tie-in points. The CONTRACTOR shall study the existing drainage system as per actual site conditions. The CONTRACTOR shall decide tie-in points for storm water drain based on existing drainage system in consultation with OWNER and PMC during detail engineering. The drainage system shall be by gravity. Storm water drains shall be sized for the peak discharge arising discharge arising out of either rain water or fire fighting water.

1.8 Contaminated Rain Water System

The CONTRACTOR shall provide proper underground drainage system for contaminated rain-water and OWS. These shall be as per the philosophy mentioned in this tender document or in consultation with PMC/OWNER. These shall be connected to existing CRWS & OWS networks at suitable tie-in points to be decided in consultation with OWNER and PMC during detailed engineering.

1.9 Sewage Disposal Scheme

The CONTRACTOR shall provide proper underground drainage system for sewage disposal scheme. This shall be as per the philosophy mentioned in this tender document with septic tanks and soak pit or in consultation with PMC/OWNER. These shall be connected to existing sewerage system at suitable tie-in points to be decided in consultation with OWNER and PMC during detailed engineering.

1.10 Paving

The CONTRACTOR shall provide RCC pavement for the complete area of the unit as job specific requirement. For the purpose of paving the Contractor's scope is not limited only up to Battery Limit, but shall extend up to the adjacent roads around the unit.

1.11 Structures buildings etc.

Contractor's scope shall include various Tanks, Technological structures, steel & R.C.C. structures, pipe rack, office buildings, equipment foundations, pits, cable trench, sheds, etc. as per the approved Plot Plan or mentioned in this tender document, required for the complete execution and commissioning of the plant.

1.12 Surface Finishing's

The CONTRACTOR shall be responsible for complete planning and detailing of all surfaces finishes viz. painting, flooring etc.

1.13 Acid / Alkali Proof Lining

The CONTRACTOR shall be responsible for surface treatment of floors, exposed portion of foundations, pits and basins against acid / alkali as per process requirement.

1.14 Anti-termite Treatment / Damp proof course / Water proofing

The CONTRACTOR shall provide anti-termite treatment, damp proof course and water proofing as per design basis.

1.15 Miscellaneous

These shall include local platforms, pipe sleepers, local foundations, local supports, etc. as per requirement.

1.16 Engineering and construction

Preparation of detailed design, drawings, supply and construction of all civil, structural, architectural, plumbing & sanitary and building works shall be in the scope of contractors work.

1.17 Existing facilities

For all civil works, scope shall include removal and rerouting of existing underground interferences as applicable. The scope also includes all removals, repairs / rerouting / relocations of all other existing civil facilities including roads, and paving, as required. The CONTRACTOR should visit the site and verify the same during bidding stage.

In case the same is to be maintained in position, adequate care shall be taken during engineering as well as construction stages.

1.19 Rerouting of underground facilities

Rerouting of cables / pipes, etc. encountered during excavation in the plot shall be in Contractor's scope of work.

1.20 Removal of Underground and Above Ground Structures

During construction of piling, foundations, underground piping & underground pits, removal of all underground obstruction is in the contractor's scope with no extra cost to PMC/OWNER.

Removal of all under ground existing structures and its foundations causing obstruction to new structures and foundations, provided removal of former will not disturb the functions of existing plant shall be in the scope of the bidder.

1.21 Sizing of various facilities

Sizing, nos., location etc. of various facilities viz. Tanks, buildings, pipe rack, structures, equipments, etc. shall be in the scope of the bidder.

Any change of sizing, addition of any structure / facility, indicated by Owner/PMC, based on functional requirements and as well as local rules and regulations, etc, shall be in the Contractor's scope, at no extra cost to OWNER / PMC.

1.22 Scope of work in outside battery limit (OSBL) Area

Scope includes work in OSBL area, if required, such as pipe racks, pipe sleepers, local platforms, local supports, road crossings / culverts from tie-in points to new units.

1.23 Rules and regulations

All the facilities shall conform to all Local Rules and Regulations, Factory Inspector, Rules, TAC rules, etc. whichever is more stringent.

Getting the approval of the various documents through the various authorities shall be in the Contractor's scope at no extra cost to OWNER / PMC.

2.0 DETAILED ENGINEERING

2.1 General

2.1.1 The CONTRACTOR shall carryout Analysis and Design of the structures required for this document and shall prepare all the required Architectural, Civil and Structural drawings needed for correct and accurate construction as per the Design Specifications given in this document.

2.1.2 The CONTRACTOR shall submit a Detailed Schedule for release of documents and drawings for review / approval to PMC/CLIENT, within 2 weeks/or mutually period of date of award of the Contract. Such a schedule shall be made in line with the overall Project Schedule given in the document.

The CONTRACTOR shall strictly adhere to the approved schedule.

The Format of Submission of the above mentioned schedule shall be mutually discussed and finalized after award of the job.

2.1.3 Construction of various structures / facilities, whose designs and / or drawings are specially identified in the document submission requirements for approval by PMC, shall not be taken up for construction at site till they are approved by PMC and comments given by PMC are incorporated.

For other structures / facilities, the CONTRACTOR shall directly submit the Approved for Construction (AFC) drawings to PMC for information before, taking up construction.

2.1.4 It shall be the responsibility of the CONTRACTOR to accommodate all the functional requirements such as access, cutouts, clearances, interference etc. while designing / detailing of various structures / facilities.

2.1.5 Complete analysis, design and all drawings of each independent structure / facility shall be submitted in one lot so as to facilitate overall systematic review by PMC.

2.1.6 Design drawings of buildings shall be submitted for information only after approval of necessary architectural drawings. These drawings shall only be reviewed by PMC after the necessary architectural drawings are approved by the OWNER / PMC to their satisfaction.

2.1.7 The CONTRACTOR shall keep the OWNER / PMC informed of any major design revisions simultaneously in progress.

2.2 Design calculations

The CONTRACTOR shall prepare the design calculations based on the standard accepted practice and guidelines from PMC / OWNER.

All design calculations shall be written systematically, legibly and submitted for approval as per standard accepted practice.

For structures, analysis and design shall be done on latest version of STAADPRO SOFTWARE.

For other miscellaneous works Excel and Word shall be used. Design calculations shall be done on A4 size sheet only.

2.3 Drawings

The CONTRACTOR shall prepare

- Civil & structural design & construction drawings, architectural drawings based on the standard accepted practice and guidelines from PMC / OWNER.
- Bar bending schedules.
- Fabrication drawings.
- As-built drawings.
- Detailing / drafting shall be done on AUTOCAD Latest Version only. Drawing size used shall be preferably of A1 size only. For foundation layout, drainage plans and paving plans, A0 size drawings can be used if necessary.

3.0 CONSTRUCTION

3.1 General

3.1.1 Construction of all civil and structural works including all material, labour, supervision, tools and tackles etc. shall be carried out by the CONTRACTOR

3.1.2 Supply of all materials viz. cement, reinforcement, structural steel etc. shall be in the scope of CONTRACTOR in consultation with Owner/PMC from approved Vendors.

3.1.3 All materials shall be procured as per the approved vendor list given elsewhere, in this document or with consultation with the Owner/PMC. All structural steel and reinforcements shall be procured from SAIL / TISCO /RINL /JSW/ARS or equivalent from the Owner's approved Vendor List. For cement and RMC, approved ISI make will be used in consultation with Owner.

3.1.4 All materials and construction shall confirm to the specification given elsewhere in this document.

3.1.5 Materials of construction, construction method etc. shall be such, so as to protect the structures and foundations against the harmful effect of chemical, fumes etc. present in the plant, its vicinity, in ground and / or subsoil water.

3.1.6 The CONTRACTOR shall be responsible for obtaining the statutory approval from local authorities such as Inspector of Factories, Development Authorities, Municipal Corporation and other concerned authorities before starting the work.

3.1.7 The CONTRACTOR shall ensure that the facilities are constructed in accordance with the APPROVED FOR CONSTRUCTION drawings and specifications.

3.1.8 The CONTRACTOR shall maintain and operate an adequate system of control of availability of latest drawings and specifications, at all the places where work is performed.

3.1.9 Construction shall include excavation in all types of soils / rock inclusive of necessary dewatering as applicable.

3.1.10 The CONTRACTOR shall redo / repair all the existing facilities viz. roads, paving, drainage etc. which are damaged during transportation, construction and erection activities performed by him.

3.1.11 Rain water harvesting is mandatory for building like control room, operator room, view room,change room &check room, administration building, security building, maintenance building, canteen, laboratory building etc..

3.1.12 Contractor shall ensure the quality of civil works by engaging a third party supervision /inspection and provide test results to Owner/PMC for information. The Quality Assurance Plan is attached with this Tender Document for reference and the contractor is obliged to follow it.

4.0 COMPLETENESS OF WORK/CONTRACT

4.1 The scope of work mentioned in the contract/NIT is not the comprehensive one, but gives total idea/outline of the scope of work; however contractor shall be responsible for completeness of the job for the purpose indicated elsewhere to make the system fully functional and operational.

4.2 The work furnished shall be complete in every respect with all mounting. fittings, fixtures and standard accessories etc. normally provided for such item/equipment and or needed/required for erection, completion and safe operation of the item/equipment/system as required by applicable codes though they may not have been specifically detailed in the respective specifications, unless included in the list of exclusions.

4.3 Any additional items and materials which are not specifically mentioned but are required to complete the system offered, in every respect in accordance with the technical specifications and required for safe operation and guaranteed performance shall also be deemed as included in the scope of work of this tender. Contractor shall not be eligible for any extra payment in respect of such mountings,fittings,fixtures,accessories etc.which are needed/required for safe operation of the item/ equipment/system, as required by applicable codes of the country though they may not have been explicitly spelt out in the NIT/Contract.

DESIGN PHILOSOPHY – GENERAL CIVIL & DESIGN BASIS

TABLE OF CONTENTS

1.0 GENERAL

1.1 SCOPE

1.2 UNITS OF MEASUREMENT

1.3 DEFINITIONS

1.4 CODES AND STANDARDS

2.0 DESIGN CRITERIA – GENERAL

2.1 SURFACE TREATMENT

2.2 ROADS

2.3 CONCRETE PAVING (WITHIN PLANT AREAS)

2.4 SURFACE TREATMENT

2.5 STORM WATER DRAINAGE

2.6 WATER SUPPLY

2.7 SANITARY SEWERS

2.8 CONTAMINATED RAIN WATER SEWERS

2.9 OTHER PROCESS DRAINS

2.10 STORAGE TANK FOUNDATION

2.11 TRENCHES

2.12 HARD SURFACES

3.0 ADDITIONAL REQUIRMENTS

3.1 REMOVAL / REROUTING OF CONSTRUCTIONS

1.0 GENERAL

1.1 SCOPE

This engineering design basis defines the design criteria that shall form the basis for carrying out design and engineering of items under general civil, viz. roads, paving, drainage, etc.

1.2 UNITS OF MEASURMENTS

Units of measurement in design shall be metric system.

1.3 DEFINITIONS

Owner	DOP and CPIIUC
Consultant	PDIL
LSTK Contractor	Successful bidder of the tender
CCE	Chief Controller of Explosives
OISD	Oil Industries Safety Directorate
TAC	Tariff Advisory Committee
NFPA	National Fire Protection Association
IS	Indian Standards

1.4 CODES AND STANDARDS

The design shall be in accordance with established codes, sound engineering practices and shall conform to the statutory regulations applicable to the country.

1.4.1 The main codes, standards and statutory regulations considered as minimum requirements are as follows. Latest revision of these shall be followed.

OISD-108 Recommended practice on oil storage and handling

OISD-109 Process design & operating philosophy on blow down & sewer system

OISD-118 Layout for oil and gas installations

IS: 456 Code of practice for plain and reinforced concrete

IS:800 Code of practice for general construction in steel

IS: 875 Code of practice for design loads (Other than earthquake for buildings & Structures

IS:1172 Code of basic requirements for water supply, drainage & sanitation

IS:1742 Code of practice for building drainage

IS:1905 Code of practice for structural use of unreinforced masonry

IS:2065 Code of practice for water supply in buildings

IS:2212 Code of practice for brick work

IS:8835 Guidelines for design of surface drains.

IRC:6 Code of practice for road bridges, Section-II Loads and stresses

IRC: 19 Standard Specifications and Code of Practice for Water Bound Macadam

IRC: 37 Design of flexible pavements

IRC: 58 Design of rigid pavements

Factory Rules for State of Bihar

Note: The above list is suggestive and not exhaustive. Apart from these basic codes any other related codes shall be followed wherever required.

1.4.2 In case of any conflict / deviations amongst various documents, the order of precedence shall as follows –

- Statutory regulations
- Job specifications
- Engineering deign basis
- Standard specification

2.0 DESIGN CRITERIA –GENERAL

2.1 SITE GRADING

2.1.1 The work area shall be cleared and stripped completely of all bushes, roots, trees, Shrubs and other vegetation, organic matter and other objectionable materials. All these should be completely uprooted and removed, and not merely scraped at the surface.

2.1.2 The grading of the area, if required, shall be done by cutting and filling with the following:

a. Cutting Area : Thoroughly rolled and compacted.

b. Filling Area : Compacted in layers not exceeding 20cm to Achieve minimum 95% of maximum dry density.

2.1.3 Site grading philosophy shall be based on following:

FFL of the adjacent paved area is .....m above Mean Sea Level (To be decided later).

However, levels like Finished Ground Levels (FGL) and Highest Point of Paving (HPP) shall be finalised by the CONTRACTOR, in consultation with OWNER / PMC, based on contour survey of the Unit, levels of adjacent units and levels of adjacent Roads.

2.1.4 Slope in Graded Areas

a General Site Grading : 1 in 500 to 1 in 1000

b. Micro grading, after completion of major : 1 in 200
Construction (for road corridors)

c. Tanks Farms : 1 in 200 to 1 in 300

2.2 ROADS

Contractor shall design cross section of roads, including roads for crane access, as per IRC 37. However, the minimum section to be adopted shall be as given in clause 2.2.1 Ruling gradient shall not exceed 1 in 20. If existing roads are to be used for erection purposes, the same should be strengthened to cater for erection loads.

2.2.1 Minimum Cross Section

i. Sub base: The sub base shall be 300 mm layer of crushed / broken size stones on well compacted earth or approved fill.

ii. Base course: The base course shall be 225 mm stone size thick water bound Macadam consisting of 3 layers of 75 mm each.

iii. Bituminous wearing course / RCC: The wearing course shall be 75 mm thick for roads with crane duty and 50 mm thick for roads without crane duty.
However, roads for crane movement, concrete pavements shall be provided.

2.2.2 Crossings

a. Pipe Ways under roads & rails : RCC Box Culverts

b. Storm Water Culverts Under road / rail. : RCC Box Culverts

c. Electric / Instruments Cable road : RCC duct bank with PVC Pipe lass – 1 (IS 4985)

2.2.3 Finished Road Top Levels Above FGL.

When box culverts for pipe- : 1.05 m (minimum)

ways are provided 1.6 m at box culvert location with a slope from 1.05 m to 1.6 m above FGL

When overhead bridges are : 1.05 m around hazardous units

Provided for pipe ways : 0.40 m to 0.60 m for others areas

Other areas : 0.40 m to 0.60 m

2.3 CONCRETE PAVING

2.3.1 General

Concrete paving shall be laid in cast-in-situ panels of 3.0 meter X 3.0 meter size, with expansion joints spaced approximately 15.0 m c/c, each panel being cast in a single pour.

Hard stands should be designed and provided by contractor, based on required crane capacity, here called for by Owner, the same shall be demolished after erection, and surface made good.

Provision of trenches, drains, sealing of trench covers, inserts, thickening for pipe / equipment supports etc. shall be made while construction pavements, as detailed in drawings.

Acid / alkali / chemical resistant coating as required shall be applied in areas where such corrosive materials are likely to come in contact with concrete.

Suitable drainage arrangements will be provided within curbed areas around pumps, for drainage leaks. Similarly, suitable drainage arrangement shall be provided at streaming points also.

Finish of 50 thick concrete screed, with non metallic (Quartz based) hardener topping shall be provided on paving after erection and commissioning of equipment is over.

2.3.2 Joints

Expansion joint of 20 mm shall consist of 20 thick impregnated fibre boards. Filled at top with joint sealing compound 20 x 25.

Equipment / column pedestals will be separated from paving with 20 thick sand fill and

Sealing compound 20 x 25.

Contraction joints will be sealed by sealing compound 10 x 40.

2.3.3 Slope : 1 in 100 (minimum)

2.3.4 Minimum requirements of paving in various areas

a. Paving within Process & Utility : Type – 1 (200 mm thk. RCC)
areas for maintenance compatible
to crane movements / dropout
/ Loading / Unloading areas /
Vehicular movement areas

b. Non vehicular movement areas

i. Unit : Type –II (150 mm thick RCC)

II. Offsite pump station : Type –II (100 mm thick RCC)

III. Utilities : Type –II (150 mm thick RCC)

c. Pipe rack : PCC 1:3:6 (100 mm thick)

Where movement of bigger cranes for maintenance is envisage paving and trenches including covers shall be designed for the loads arising from the same.

2.4 SURFACE TREATMENT

The surface treatment for the various areas shall be provided as enumerated in the table below.

AREA	CONCRETE PAVING	ASPHALT PAVING	50 thick PCC 1:3:6 ON 115 thick brick soling	GRAVEL	100 THK PCC 1:3:6	ACID / ALKALI PROOF COATING
Operating Areas of Process units	X (Type I /II Paving as per cl. 2.3.4)					
Roads		X				
Approaches to units		X				
Tank farms			X			
Acid / alkali / storage / handling area						X
Parking		X				
Hardstands	X					
Pathways	X					
Pipe ways					X	

' X ' Indicating applicable option
Notes: 1. Existing services where interfering with the new construction should be located and rerouted as instructed by Owner / Consultant. 2. Micro-grading shall be carried out by the Contractor over graded areas to bring the FGL to indicated levels including provision of required slopes and finishes.

2.5 STORM WATER DRAINAGE

2.5.1 Storm water drains shall be sized for the higher discharge arising out of either rain water or fire fighting water.

2.5.2 Rain water run-off shall be computed by the formula:-

Q = KIA / 360

K is run-off coefficient given below.

A is area (hectares) contributing to the drain

I is rain fall intensity (mm / hr.)

Q is the discharge.

2.5.3 Design of drains shall be based on Manning's formula:-

$V=R^{2/3} S^{1/2} / n$

V is velocity of flow m/s,

R is hydraulic radius,

S is slope,

n is roughness coefficient taken as 0.013 for plaster surface, 0.015 for cast-in-situ concrete, 0.017 for brick lined.

The following parameters are to be ensured to be within limits specified while sizing

Minimum velocity of drains : 0.6 m/s

Maximum velocity of drains : 2.4 m/s

Minimum depth of drains : 300 mm

Minimum width of rectangular drains : 300mm (for depth<500mm)

Minimum width of drains : 500 mm (depth > 500mm)

Run off coefficient 'K'

a.	paved area	concrete	-	1.0
		Bituminous	-	0.9
b.	unpaved areas		-	0.7
c.	unusable areas like Green belt		-	0.4

2.5.4 Drains within Process Units

Rain water falling on such portion of paved areas of process unit where it is not likely to get contaminated, shall be collected in open rectangular RCC drains. These drains shall be covered by gratings, and shall be generally connected to periphery drains, which at battery limit shall have a double

valve chamber. This will permit discharging the rain water either to storm water network, or to the battery limit CRWS manhole. Drains shall be designed for the maximum of rainwater / firewater on same principles as storm water drains.

2.5.5 Culverts and Road/Rail Crossings

Road / Rail and storm water drain crossing shall by RCC box culverts, designed for the Relevant IRC loads for roads, and track loads for rail. The relevant lateral loads due to wheel / track loads on the soil adjacent to wall on crossing shall be considered on the walls. Approval from the rail authorities on culvert design shall be in the scope of LSTK contractor.

Drain to adjacent to roads / pavement where heavy crane movement is anticipated shall be Concrete drains, designed to resist the lateral thrust due to wheel loads.

2.5.7 Disposal of Storm Water

Storm water drains shall not be combined with oily waste sewer / CRWS/combined sewer system, etc.

2.6 WATER SUPPLY

Existing drinking water piping shall be extended to new facilities. Adequacy of header

branch line etc. shall be ensured; else additional lines shall be run.

2.6.1 Drinking Water System (Plant Service)

a. Rate of water supply - 100 litres / head / day

b. System - Underground ring main with G.I pipes and

Fittings as per code.

c. Storage - Overhead tank RCC construction

Capacity -6 hours, based on average daily

demand

2.7 SANITARY SEWERS

2.7.1 General

Sanitary sewerage will not be combined with storm water.

Building drainage shall be designed as a dual pipe system with separate soil & waste pipe.

Sewers shall be designed for discharging 3 times average flow flowing half full in case of lateral sewer, and flowing 2/3 full in case of Main sewer. The minimum and maximum clearing velocities shall be 0.75 m/s and velocity 2.4 m/s respectively. Velocity shall be calculated by Manning's formula with n=0.015

Minimum pipe size shall be 100 mm and all pipes shall preferably be salt glazed stoneware unless abnormal soil conditions or high velocity dictates otherwise.

2.7.2 Sanitary sewer shall be led into the existing sewerage system leading to waste water treatment plant (WWTP). Where system is not available, septic tank/soak pit shall be provided.

2.7.3 Cover for Sewer Line shall be minimum 600 mm.

Under road, sewer shall be protected by concrete encasement or minimum cushion shall be 1200 mm.

2.7.4 Material of Construction

a. Material of Construction for Manholes shall R.C.C. M30.

b. Material of Construction for Sewer

Sanitary Sewer

i.	Toilet block to inspection chamber	-	CI pipes as per IS: 3486/1729) or UPVC, as directed.
ii.	Gravity main & lateral	-Salt glazed stoneware / C.I./ R.C.C. Class P1 (as per IS:458)	
iii.	Pressure main	-	C.I. pipes (as per IS: 1536 an IS: 1537)
iv.	Offsite Pumping, if any	-	GI as per PMS J2A
v.	Manholes	-	R.C.C. M30

2.8 CONTAMINATED RAIN WATER SEWERS

2.8.1 Process Unit

Contaminated rain water / floor wash / fine water shall be collected through catch basins located in the contaminated areas of the process unit and shall be send to the oil catcher / CRWS pit / CRWS header.

CRWS shall be designed for contaminated water due to rain water or Fire water, whichever is more. The quantities of contaminated rain water shall be worked out based on the contaminated

process area in the unit block. Sewer shall be sized flowing full with peak flows taking future requirements or 2/3 full without future requirements.

CRWS manholes shall be R.C.C. (M30) construction. For trapping of gas or prevention of spread of fire through CRWS from one area to another, a liquid seal of minimum 150 mm shall be provided in manhole along with suitable vents. Location of sealed manholes should be decided accordingly. The vents on the manholes should extend minimum 2.0 m above the pipe rack or 1.0 m above buildings, or if in open areas extending min 3.0 m above FGL with frame arresters.

CRW sewers in process units and tank areas shall be of mild steel / Carbon steel conforming to IS: 3589

2.9 OTHER PROCESS DRAINS

Other process drains shall be closed blow down sewers or chemical Sewers. These shall be provided as per OISD -109 and as per u/g piping design basis. Sizing, layout, material specification, corrosion protection etc will be as per u/g piping design Basis.

Blow down are liquid streams containing water / oil / chemicals that are required to be

drained from process equipment under different operating situations like start-up, shutdown etc.

Chemical sewers carry effluents containing chemicals which require separate treatment from oily water streams. These are generally corrosive and require pipe of materials resistant to corrosion or lined pipes.

Contaminated rain water catch pits / manholes shall be of reinforced concrete, with internal coal tar epoxy lining.

Manhole for acid / alkali sewer shall be of reinforced concrete (M30). Exposed steel work shall be provided with coal tar epoxy coating.

2.10 STORAGE TANK FOUNDATION

2.10.1 Storage tank foundations shall be designed to sustain the forces at the tank bottom within permissible settlement, under operating and hydro-test conditions.

Tanks less than 2.5m dia. may rest directly on a concrete pedestal with anti corrosive layer.

Tanks greater than 2.5m dia. but less than 10.0 m dia. may be supported on RCC ring all with sand / murrum fill.

For tanks greater than 10m dia, Tank Pad Foundations shall be provided as per Engineering Specification given in relevant IS codes.

2.10.2 Anticorrosive layer shall be provided as per specifications for tank pads of 50 thick premix Carpet over 50 thick bitumen sand mixed with additions of kerosene / oil as required.

2.11 TRENCHES

Trenches shall be of RCC with inserts or other suitable arrangement required to support Cables pipes etc. Pre-cast concrete covers with lifting arrangement shall be provided on top. In paved areas, the top will be flush with finished floor level. Covers shall overlap walls and joints with paving shall be sealed to prevent water entry. In unpaved areas, walls shall be raised above ground level by 100 mm. Trench floors shall be provided with a nominal slope to drain pits, where any water entering trenches can collect and be detained to the nearest contaminated rain water sewer / storm water sewer. Trench covers shall be designed for the vehicle load relevant to the area where the trench is located. Cable trench shall be of leak proof construction.

2.12 HARD SURFACES

Hard surface of PCC 1:3:6, (100 mm thick) over suitable bedding (brick / stone soling) Shall be provided below all new pipe tracks and / or extended potion of existing pipe Tracks. This shall extend 600 mm on one side for track width less than 6 m, and 900mm On either side for pipe track having width 6 m or more, end it shall have approach @ 500 M c/c from nearest road.

Hard surface of PCC 1:3:6 (100 mm thick) over suitable bedding (brick / stone soling) of approximate size 1 m x 1 m shall be provided with proper approach near drain point of offsite piping, near drinking water installations, at washing facilities, etc., with suitable curbing and drainage arrangements as required for the fluid being handled.

3.0 ADDITIONAL REQUIREMENTS

3.1 REMOVAL / REROUTING OF OBSTRUCTIONS

All underground or above ground structures / foundations which will cause obstruction to new structures / foundations, and which can be removed without disturbing any functions of the existing plant, shall be removed by the Contractor.

All existing underground or above ground facilities requiring rerouting due to fouling with new facilities shall be rerouted by the Contractor in such a manner that rerouted facilities keep on functioning as before.

NOTE:

Before finalizing the route connection to existing system, adequacies of existing system shall be checked by the contactor.

CIVIL ENGINEERING DESIGN BASIS (STRUCTURAL)

TABLE OF CONTENTS

CONTENTS

1.0 GENERAL

1.1 SCOPE

1.2 UNITS OF MEASUREMENT

1.3 DEFINITIONS

1.4 CODES AND STANDARDS

2.0 MATERIALS OF CONSTRUCTION

3.0 DESIGN LOADS

3.1 DEAD LOADS

3.2 EQUIPMENT LOADS

3.3 LIVE LOADS

3.4 WIND LOADS

3.5 SEISMIC LOADS

3.6 IMPACT & VIBRATORY LOADS

3.7 CONTINGENCY LOADS

3.9 MISCELLANEOUS LOADS

3.10 LOAD COMBINATIONS

4.0 DESIGN CRITERIA FOR FOUNDATIONS

4.1 GENERAL

4.2 TYPES OF FOUNDATIONS

4.3 SHALLOW FOUNDATIONS

4.4 PILED FOUNDATIONS

4.5 MACHINE FOUNDATIONS

4.6 FOUNDATION BOLTS

4.7 PEDESTAL HEIGHTS

4.8 GROUTING

5.0 DESIGN CRITERIA FOR RCC STRUCTURES

5.1 GENERAL

5.2 LIQUID RETAINING R.C.C. STRUCTURES AND BASEMENTS

5.3 STAIRCASE

5.4 CONCRETE GRADE

5.5 REINFORCEMENT BARS

5.6 MINIMUM THICKNESS OF STRUCTURAL CONCRETE ELEMENTS

5.7 MINIMUM COVER TO REINFORCEMENT

5.8 EXPANSION JOINT

5.9 DEFLECTIONS

5.10 MISCELLANEOUS APPLICATIONS

6.0 DESIGN CRITERIA FOR STEEL STRUCTURES

6.1 GENERAL / DESIGN METHOD

6.2 EXPANSION JOINTS

6.3 STEEL GRADE

6.4 FIRE PROOFING OF STEEL STRUCTURES

6.5 LIMITING PERMISSIBLE STRESSES

6.6 LIMITING DEFLECTION

6.7 MINIMUM THICKNESS

6.8 PAINTING

6.9 GROUTING

6.10 CLADDING / RAINWATER GUTTERS

7.0 CRITERIA FOR MASONRY WORKS

7.1 GENERAL

7.2 CEMENT MORTAR

8.0 DESIGN REQUIREMENTS FOR SPECIFIC APPLICATIONS

8.1 PIPERACK

8.2 CULVERTS

1.0 GENERAL

1.1 SCOPE

This engineering design basis defines the minimum design criteria that shall form the basis for carrying out detailed structural design and engineering of all plant and non-plant structures and buildings. Compliance with this design basis and / or review of any of the contractor documents shall in no case relieve the contractor at the contractual obligations. All structures shall be designed for the satisfactory performance of the functions for which they are being constructed.

1.2 UNITS OF MEASUREMENT

Units of measurement in design shall be in metric system.

1.3 DEFINITIONS

Owner	Dept. of Pharmacy/ CPIIUC
Consultant	PDIL
LSTK Contractor	Successful LSTK bidder of the tender
CCE	Chief Controller of Explosives
OISD	Oil Industries Safety Directorate
TAC	Tariff Advisory Committee

NFPA National Fire Protection Association

IS Indian Standards

1.4 CODES AND STANDARDS

The design shall be in accordance with established codes, sound engineering practices and shall conform to the statutory regulations applicable to the country.

1.4.1 The main codes and standards and statutory regulations considered as minimum requirements are as follows Latest revision of these shall be followed.

1) National Building Code of India : 2005

2) IS: 875 (Part 1) – Code of Practice for Design Loads (Other than Earthquake) for Buildings and Structures (Part 1 – Dead Loads).

3) IS: 875 (Part 2) - Code of Practice for Design Loads (Other than Earthquake) for Buildings and Structures (Part 2 – Imposed Loads).

4) IS: 875 (Part 3) - Code of Practice for Design Loads (Other than Earthquake) for Buildings and Structures (Part 3 – Wind Loads).

5) IS: 1893 (Part 1):2002 –Criteria for Earthquake Resistant Design of Structures (Part 1 – General Provisions and Building).

6) IS: 1893 (Part 4):2005 –Criteria for Earthquake Resistant Design of Structures (Part 4 – Industrial Structures including Stack-Like Structures).

1.4.2 STRUCTURAL STEEL

1) IS: 800 – Code of Practice for General Construction in Steel

2) IS: 802 – Code of Practice for use of structural steel in overhead transmission line towers.

3) IS: 1161 – Code of Practice for Circular hollow sections/pipes.

4) IS: 4923 – RHS & SHS sections.

5) IS: 2629 – Recommended practice for hot dipped galvanizing on iron and steel.

6) IS: 2633 – Methods for testing uniformity of coating of zinc coated articles.

7) IS: 6533 – Code of Practice for design and construction of steel chimney.

8) IS: 6745 – Method for Determination of mass of zinc coating.

9) IS: 814 – Covered Electrodes for manual metal arc welding of Carbon and carbon manganese steel.

10) IS: 816 – Code of Practice for use of Metal arc welding for General Construction in mild steel.

11) SP-06 – (Part 1 to Part 7)- Handbook for Structural Engineers.

1.4.3 REINFORCED CONCRETE AND MASONRY WORK

1) IS: 456 – Plain and Reinforced Concrete – Code of Practice

2) SP:16 - Design Aids for Reinforced Concrete to IS: 456

3) SP: 34 – Handbook of Concrete Reinforcement and Detailing.

4) SP:24 – Explanatory Handbook on Indian Standard Code of Practice for Plain and Reinforced

5) SP: 20(S & T) – Explanatory Handbook on Masonry Design and Construction.

6) IS: 2911 (Part 1 to Part 4) – Code of Practice for Design and Construction of Pile Foundation.

7) IS: 2950 (Part 1) – Code of Practice for design and construction of Raft foundation.

8) IS: 2974 (Part 1 to Part 5) – Code of Practice for design and construction of Pile Foundations.

9) IS: 3370 - Code of Practice for Concrete Structures for storage of liquids.

10) IS:4326 – Code of Practice for earthquake resistant design & construction of buildings

11) IS: 13920 – Code of Practice for ductile detailing of reinforced concrete structures subjected to seismic forces.

12) OISD-STD – 173 – Fire Prevention and Protection system for Electrical installations (a Publication of Oil Industry Safety directorate)

13) IS:1172 - Code of basic requirements for water supply, drainage & sanitation

14) IS:1742 - Code of practice for building drainage

15) IS:1905 - Code of practice for structural use of unreinforced masonry

16) IS: 2212 - Code of practice for brick work

1.4.4 ROADS AND SANITARY WORKS

1) IS: 2065 - Code of practice for water supply in buildings
2) IS: 8835 - Guidelines for design of surface drains.
3) IRC: 6 - Code of practice for road bridges, Section-II Loads and stresses
4) IRC: 19 - Standard Specifications And Code of Practice for Water Bound Macadam
5) IRC: 37 - Design of flexible pavements
6) IRC: 58 - Design of rigid pavements

Note: The above list is suggestive and not exhaustive. Apart from these basic codes any other elated codes shall also be followed wherever required.

In case of any difference between Codes provision and this design basis, the stringent one should govern the design.

1.4.5 In case of any conflict / deviations amongst various documents, the order of precedence shall be as follows.

- Statutory Regulations
- Job Specifications
- Engineering Design Basis

3.0 DESIGN LOADS

The following design loadings shall be considered

Dead loads including self weight

Live load

Wind load

Seismic load

Equipment load

Dynamic load

Load from lifting appliances

Erection loads / maintenance loads

Thermal load

Earth pressure / Hydrostatic Loads

Any other load not mentioned above, but applicable

These loadings shall be applicable to all structures irrespective of the material employed for construction.

3.1 DEAD LOADS

Dead load shall comprise of the weight of all permanent construction including walls, fire proofing, floors, roofs, partitions, stairways and fixed services.

Unless noted otherwise following unit weights shall be adopted.

Reinforce Concrete	:	2500 kg/m³
Plain Concrete	:	2400 kg/m³
Structural steel	:	7850 kg/m³
Backfill Soil	:	1800 kg/m³
Operating floor with grating	:	100 kg/m²
Staircase (steel)	:	140 kg/m²
Ladder	:	40 kg/m²
False ceiling	:	60 kg/m²
Heavy duty tar felting	:	30 kg/m²

3.2 EQUIPMENT LOADS

The empty / operating / test weight of process equipment including all fixtures, platforms, ladders and attached piping but excluding contents, shall be considered. If piping weight is not indicated separately or not included in the weight of the equipment, the same shall be taken as 10% of the weight of the equipment.

3.2.1 Fabricated Equipment

3.2.1.1 Special Considerations

a. Bundle Pull

Bundle pull forces for different types of exchangers shall be taken as under :-

Fixed type	-	Nil
Kettle type	-	0.30 x Bundle weight
All other types	-	0.86 x Bundle weight or 30 N/mm of diameter Whichever is greater.

Total Bundles Pull shall be considered on fixed pedestal alone

b. Thermal Expansion

Horizontal force due to thermal expansion of horizontal vessels / exchangers shall be relieved by using slotted holes and slide plates and remaining force derived from the product of the sliding saddle 'gravity load' and the coefficient of friction taking (0.3 to Steel or 0.08 PTFE) shall be applied to each support.

c. Non-Static Loading

Foundations and structures supporting vessels subject to surge loading, such as Deaerators shall be designed with sufficient stiffness and rigidity to resist a notional horizontal forces of 10% of those derived from the Vessel's operating weight or the given surge load whichever is the greater. The forces shall be applied at the vessel's centre of gravity and act longitudinally OR transversely. Consideration shall be given to bracing these structures.

The design of foundations and structures supporting agitated vessels, centrifuges, reactors and other variable load equipment shall take full account of all the loading data provided by the equipment vendors. Where no loads are available, consideration shall be given to applying force at 10% of operating weight. In addition, for dynamic effect loads will be increased by 50% of steam agitated equipment and 25% for mechanical agitated vessels.

Where two or more similar items of such equipment are supported on a common foundation or structure, the design must be based on the assumption that these items will resonate in phase.

3.3.2 Rotating Equipment

Comprehensive loading data of mechanical equipment, such as, fans, blowers, pumps, compressors, D.G. Sets, turbines, motors engines etc., as furnished by the equipment vendor shall be considered.

3.3 LIVE LOADS

Live loads shall, in general, be as per IS: 875. However, the following minimum live loads shall be considered in the design of structures to account for maintenance and erection phases; if equipment layout / vendor drawings indicate loads of greater magnitude, the same shall be adopted.

i. Process Building / Technological Structure (Open / Enclosed type)

Operating area	-	5.0 kN/m²
Maintenance area	-	7.5 kN/m²
Ground floor	-	10.0 kN/m²

ii. Office building

Office area	-	3.0 kN/m²
Entrance lobby	-	5.0 kN/m²
Exit way	-	5.0 kN/m²
Miscellaneous partition	-	1.0 kN/m²

iii. Laboratory

Upper floors	-	4.0 kN/m²
Ground floor	-	5.0 kN/m²

iv. DM Plant /ETP

Operating platforms	-	3.0 kN/m²
Ground floor	-	5.0 kN/m²

v. Staircase

Technological structure	-	5.0 kN/m²
Office	-	5.0 kN/m²

Laboratory	-	4.0 kN/m²
Service platform	-	2.5 kN/m²

Loads on account of equipment and incidental loads shall be taken over and above the loads indicated in the table.

For all other buildings not covered in above Table as well as for roofs of various structures, the live loads shall be taken as specified in IS: 875 (Part II)

1 kN/m² allowance shall be made for services supported from below the floor.

3.4 WIND LOADS

Wind loads shall generally be as per IS-875 (Part-3). Basic wind speed shall be as per the Code. As per IS:875 (Part-3), definition of basic wind speed shall be peak gust velocity averaged over 3 second time interval at 10 m height above mean ground level with 50 years mean return period . The design life span of all structures, except temporary structures, and boundary wall shall be taken as 50 years. Life span of temporary structures and boundary wall can be lesser and shall be as per IS: 875.

Values of coefficients K_1, Terrain Category, K_3 for the project site shall be considered as per IS: 875 – Part 3.

Coefficient K_2 shall be worked out based upon structure height, structure class and terrain category mentioned in the table above.

Design wind speed shall be worked out based on basic wind speed and k1, k2, k3 using IS 875 Part-3.

Design wind pressure (P_d) shall be worked out based on design wind speed using IS: 875 Part-3.

To account for surface area of piping, platforms and other attachments fixed to the equipment, the surface area of the equipment exposed to wind shall be increased by 20% or as specified in the mechanical data sheets of the equipment.

Wind force on structural elements shall be calculated using design wind pressure multiplied by elements frontal area, normal to wind direction multiplied by force coefficient as per Table 26, IS 875 Part-3.

In calculation of wind force frictional drag shall be considered where applicable.

3.5 SEISMIC LOADS

Seismic design and loads shall be based on as per IS 1893-2002.

3.6 IMPACT AND VIBRATORY LOADS

Structures subjected to impact or vibratory loads shall be designed as per the provision of IS: 875 & IS: 2974. Requirements for monorails and overhead cranes shall be as per IS: 800, IS: 875 or manufacturer's data, whichever is more stringent.

3.7 CONTINGENCY LOADS

3.7.1 RCC Structures

All floor slabs and beams shall be designed for a concentrated load of 10 KN acting simultaneously with the uniform live load, but not with actual concentrated loads from equipment, piping etc. This load shall be placed to result in maximum moment and / or maximum shear.

This load shall not be considered for the design of columns, foundations and in overall frame analysis. For floor slabs, the load shall be considered to be distributed over an area of 0.75 m x 0.75 m.

3.7.2 Structural Steel

For process plants, the following contingency additional loading shall be applied to individual beam elements, these shall be applied as point loads to produce worst shear and bending stresses:

Platform Walkways	3 KN
Secondary Floor Trimmers	5 KN
Primary / Grid beams	10 KN

3.8 MISCELLANEOUS LOADS

Apart from the specified live loads, possible overloading during construction / hydro-test maintenance / erection shall also be considered in the design Job specifications shall also be referred to, for any specific loading.

Hydrostatic pressure shall be adequately accounted for, in the design of structures, below ground water table.

All the handrails, parapets, parapet walls, balustrades shall be designed for horizontal load mentioned in Table 3 of IS-875 (Part-2).

3.10 LOAD COMBINATIONS

Structural analysis and design shall take into consideration, worst combination of the above loads under different phases, such as, Erection, Operation, Hydro-test, Shutdown, Maintenance, and Blast for control room, as applicable based conforming to the latest edition of relevant IS codes.

4.0 DESIGN CRITERIA FOR FOUNDATIONS

4.1 GENERAL

Foundation sizing shall be based on working loads, not on loads which may have been increased by factors for the purpose of concrete design.

4.2 TYPE OF FOUNDATIONS

Type of foundations to be adopted and the pertinent details there of shall be as per provisions of scope and job specifications documents.

Following clauses describe the general guidelines to be followed while designing the foundations; these clauses do not per se stipulate the type of foundations to be followed.

4.3 SHALLOW FOUNDATIONS

4.3.1 For gravity loading, allowable net bearing capacity of soil shall be based on the following settlement criteria:

Foundation Type	Allowable Settlement(mm)
Foundations in unit areas, utility areas and Foundations for plant buildings, technological structures,	25
Machine foundations and critical equipment with interconnected piping	25
Foundations supporting non-plant buildings	40

4.3.2 For transient loadings, such as wind / seismic, allowable net bearing capacity based on shear criteria may be considered.

4.3.3 For load combinations including wind, the Safe Soil Bearing Pressure may be increased by 25%.

4.3.4 For load combinations including earthquake, the Safe Bearing Pressure of Soil may be increased as permitted in IS: 1893.

4.3.6 Allowable Loss of contact area between underside of foundation and soil (due to resultant Overturning Moment) under different loading conditions shall be as given below.

	Load Combination description	Allowable % Loss of Contact Area
A	Operating Load case (Plant operating, with or without Live Loads, for worst cases)	0 % to 10%

	Operating Load Case with Wind or Earthquake (with or without Live Loads, for worst cases)	up to 25%
B	Operating Load case (Plant operating, with or without Live Loads, for worst cases)	0 % to 20%
	Operating Load Case with Wind or Earthquake (with or without Live Loads, for worst cases)	up to 30%

Where

A = Foundations on Soil

B = Foundations on Rock

4.3.7 Soil and hydrostatic pressure on walls below grade.

In the design of walls below grade, provision shall be made for the lateral pressure of adjacent soil. Due allowance shall be made for possible surcharge from fixed or moving loads. When a portion or whole of the adjacent soil is below a free water surface, computations shall be based on the weight of the soil, diminished by buoyancy, plus full hydrostatic lateral pressure.

The lateral pressure from surcharge loads shall be taken in addition the lateral earth pressure loads.

4.3.8 Stability of foundations

Foundations shall be checked for stability against overturning, sliding & uplift. While checking against uplift, the following shall be considered.

Minimum factor of safety against uplift shall be 1.2 for all structure. (Note: In case of sumps, lining weight shall not be included). Beneficial load of backfill can be included on in circumstances where it will never be removed.

Buoyancy from high ground water levels shall be taken into account in investigating stability against uplift.

4.4 PILED FOUNDATIONS

Piles shall be designed as per IS: 2911. However, pile capacity shall be proven by a sufficient number of initial load tests before preparing piling plans.

The increase in Safe Working Load permitted as per codal provisions, under load combinations including wind / earthquake shall apply equally to uplift and shear conditions, subject to confirmations by the piling Contractor with respect to the particular piling system. Pile capacity may be similarly increased in blast condition to 1.5 times the permissible capacity under compression, tension and shear modes.

4.5 MACHINE FOUNDATIONS:

Machine / Mechanical equipment foundations shall satisfy the requirements of IS: 2974 and any other parameters as per machine vendors.

Foundations shall be so designed that natural frequency of the foundation system shall not resonate with the following:

a) Operating speed of the motor / turbine
b) Operating speed of the machine
c) 2 x Operating speed of the machine
d) Critical speed of the machine (for centrifugal machines)

It shall be ensured that there is no transfer of vibrations from machine foundations to any part of the adjoining structures. In case such machines are sitting on building floors, approved damping pads shall be used with prior approval of the Owner / Consultant.

Where deviations (resulting from inaccuracies in soil parameter measurements, approximations in design method, etc.) from calculated natural frequencies, leading to amplitudes in excess of specified limits are foreseen, provision for increasing the foundation mass without removal of

the machine and without affecting surrounding space availability or connected piping shall be made, if possible.

4.7 FOUNDATION BOLTS

4.7.1 Minimum cover to Foundation Bolts

Minimum distance from the center line of foundation anchor bolt to edge of pedestal shall be the maximum of the following:-

i. Clear distance from the edge of the base plate/base frame to the outer edge of the pedestal shall be minimum 50 mm.
ii. Clear distance from the face of pocket to the outer edge of the pedestal shall be 100 mm.
iii. Clear distance from the edge of the sleeve or anchor plate to the edge of pedestal shall be 100 mm.

4.7.2 All equipment foundation bolts / templates shall be designed and supplied by equipment vendor.

Foundation bolts for steel structures shall be designed and supplied by contractor as per standard drawings or approved equivalent.

4.8 PEDESTAL HEIGHTS

Building plinth : 600 mm above FGL or as per requirement

Pedestals for structural columns : As per design requirement

Open paved area : 150 mm (min.) OR as indicated in Equipment layout drawing

Open unpaved area : 300 mm

Covered area(building etc.) : 150 mm (min.) OR as indicated in drawing

Storage tank foundation : As per equipment layout

All equipment supporting foundations / pedestals

Open area : As required but not less than 300 mm

Covered area : As required but not less than 150 mm

Stair Pedestals : 150 mm (min.) OR as indicated in equipment Layout drawing.

Ladder pedestals : 150 mm

4.9 GROUTING

The minimum thickness of grout shall be 25 mm.

All anchor bolts sleeves / pockets and spaces under column bases, shoe plates etc. shall be grouted with free flow, non shrink (premix type) grout, with 28 days minimum cube crushing strength of 40 N/mm². Ordinary grout consisting of 1 part of OPC and 2 parts of clean, dry well graded sand mixed with water to obtain the required consistency shall only be used under the base plates of cross-overs, short pipe supports (not exceeding 1.5 m height) and small operating platforms (not exceeding 2 m height) not supporting any equipment.

For rotating equipment bases, (above 300 KW rating), grout shall be as per requirements of equipment vendor, as per the approved list / as per the decision of EIC.

5.0 DESIGN CRITERIA FOR REINFORCED CONCRETE STRUCTURES

5.1 GENERAL

a) All buildings, structures, foundations, machine/equipment foundations, liquid retaining storage structures, trenches, pits etc. shall be of RCC and designed based on the following IS codes (latest revision with all amendments, issued there to) in general, and other relevant

IS codes applicable : IS:456, 875, 1893, 1904, 2911, 2950, 2974, 3370, 4326, 4991, 4998, 5249, 6403, 8009, 13920.

b) Only limit state method as per IS: 456 shall be followed for the design unless otherwise specified elsewhere in this document for special structures.

c) All skeletal structures shall be of frame type construction, and detailing shall be as per provision of IS: 13920.

d) Where the specified design depth of groundwater table so warrants, all underground pits, tunnels, basements, etc. shall be leak-proof R.C.C. construction using water proofing compounds.

5.2 LIQUID RETAINING R.C.C. STRUCTURES AND BASEMENTS

5.2.1 All liquid retaining / storage R.C.C. structures shall be leakpoof and designed as uncracked section in working stress method as per IS:3370. However, the parts of such structures not coming in contact with the liquid, shall be designed according to IS:456 except ribs of beams of suspended floor slabs and counterforts of walls (located on the side remote from liquid) and roof of liquid retaining structures which shall be designed as uncracked section. Hot/cold water basin, and other primary framing members of Cooling Towers and similar liquid retaining structures, which remain constantly in contact with water (stored / sprayed) shall be designed as uncracked sections. No increase in permissible stresses in concrete and reinforcement shall be made under wind or seismic conditions for such structures.

5.2.2 All liquid retaining / storage structures shall be designed assuming liquid up to the full height of wall, irrespective of provision of any overflow arrangement. Pressure relief valves or similar pressure relieving devices shall not be considered in underground water retaining RCC structures. Hot water basin in cooling tower shall be designed for the weight of water up to top of parapet wall.

5.2.3 Following conditions shall be also considered for design of liquid retaining structures, basement, trenches and other underground structure:-

a) Only water pressure from inside and no earth pressure, groundwater pressure or surcharge from outside wherever such a condition is likely to exist either in operation or during installation / testing.

b) Earth pressure, surcharge pressure or ground water pressure from outside and no water pressure from inside.

c) Base slab shall also be designed for the empty condition during construction and maintenance stages with maximum ground water table. Pressure Relief Valves shall not be used.

d) Intermediate dividing walls of pump sumps shall be designed considering water in one pump only and the other sump being empty for maintenance.

5.2.4 The walls and base slabs of liquid retaining storage structures shall be provided with reinforcement on both faces for thicknesses greater than 150 mm.

5.2.5 In all liquid retaining structures, PVC water bars (230 mm wide, 6 mm thick) shall be provided at each construction joint. PVC water bars shall be of minimum 150/230 mm width and 6 mm thickness, and generally shall be riffed/serrated type with a central bulb Kicker type PVC water bars shall be used for the base slab and in other areas where it is required to facilitate concreting.

5.3 STAIRCASE

5.3.1 Minimum width of stairs in all buildings shall be 1000 mm. All stairs shall have a maximum riser height of 175 mm and a minimum width of 250 mm. Number of risers shall be restricted preferably to 12 depending on occupancy. At least one staircase shall be provided for access to the roofs for maintenance. Staircase design shall conform to Factory Inspectorate Rules.

5.3.2 Stairway in a single run shall have the same slope. The vertical rise of the stairways shall not exceed 2.5 m for a single flight.

5.4 CONCRETE GRADE

All cast-in-situ structural concrete shall be Reinforced Concrete conforming to IS:456 and shall be of minimum grade M30 for all Sub-structures except for grade slabs / paving for which M20 may be used and M25 for all Super-structures. Pre-cast concrete shall be of minimum grade M35.

From durability consideration the minimum cement content and maximum water-cement ratio shall be as follows:-

Type of Cement	Plain concrete		Reinforced concrete		Remarks Exposure Condition
	Minimum cement content	Maximum water-	Minimum cement content	Maximum water-	

	(kg/m³	cement ratio	(kg/m³	cement ratio	
53 Grade-OPC	240	0.55	330 (for shallow fdns-400 (for piles)	0.45	Severe

Maximum cement content shall not exceed 450 kg/m³. If soil investigation report recommends high cement content and / or specified type of cement, the same shall have precedence.

75 mm thick lean concrete of grade M10 (nominal mix) shall be provided under all RCC foundations except under base slab of liquid retaining structures where 100 thick concrete of mix M10 (nominal mix) shall be used. The lean concrete shall extend 50 mm beyond the foundation for normal foundations and 75 mm under liquid retaining structures.

Concrete for encasing shall be M20 with 10 mm down aggregate.

Plain cement concrete (PCC) of grade M15 (nominal mix) of minimum 150 mm thickness shall be provided under all masonry wall foundations.

Plain cement concrete of grade M20 of minimum 40 mm thickness shall be provided as damp proof course, at plinth level of all masonry walls and to be coated with 3 mm thick bitumen emulsion.

Lean concrete of grade 1:5:10 shall be used as filler material wherever loose sub-grade exists by removing the loose soil/fill.

Any specific requirement regarding grade and thickness of PCC to be provided shall be incorporated in the drawing.

5.5 REINFORCEMENT BARS

High yield strength deformed TMT steel bars of grade Fe500D conforming to IS: 1786 shall be used. The Minimum dia. used shall be 8mm.

Binding wire used for tying the reinforcement shall conform to IS: 280 unless specifically mentioned herein or in engineering drawings or other engineering design basis prepared for the individual units/structures.

Wherever warranted by soil investigation report, HYSD Fe500 corrosion resistant bars confirming to IS: 1786 shall be used in foundations.

5.6 MINIMUM THICKNESS OF STRUCTURAL CONCRETE ELEMENTS

For structural concrete elements, the following minimum thickness shall be followed:-

-	Footings (All types with or without beams)	:	300 mm
	Note: Tapered footings shall not have thickness less than 150 mm at the edges. Minimum average thickness shall not be less than 300 mm		
-	Pile Cap	:	500 mm
-	Basement walls	:	150 mm
-	Basement slab with beams / without beams	:	200/300 mm
-	Slab thickness in raft foundations with beam & slab construction	:	150 mm
-	Floor / roof slab, walkway, canopy slab	:	150 mm
-	Cable / Pipe Trench, Launder Walls & Base Slab	:	125 mm
-	Parapet	:	100 mm
-	Louvre/Fin (not in contact with liquid)	:	100 mm
-	Louvre (in contact with liquid)	:	100 mm
-	Precast Trench Cover / Precast Floor Slab	:	125 mm
	Liquid retaining / Leak proof structures, Underground Pits		
-	Walls	:	150 mm
-	Base slab with beams	:	200 mm
-	Base slab without beams	:	300 mm

5.7 MINIMUM COVER TO REINFORCEMENT

The following minimum clear cover shall be provided to all steel reinforcement including links.

- Slab (roof & floors, canopy, cantilever, waist slab) : 30 mm
- Beam (roof, floor tie, & lintel) : 30 mm or dia. of bar Whichever is greater
- Column, Padestal : 40 mm above FGL
  50 mm below FGL
- Retaining wall, Basement and Pit Wall
  a. Face in contact with earth : 50 mm
  b. Free face : 30 mm or dia.of bar whichever is greater
- Liquid retaining structure
  a. Face in contact with liquid : 30 mm or dia.of bar whichever is greater
  b. Face away from liquid but in contact with earth : 50 mm
  c. Free face : 30 mm or dia.of bar whichever is greater
- Foundation slab, base slab, plinth beam : 50 mm
- Pile Cap
  a. Bottom face : 100 mm
  b. Top face : 50 mm

5.8 EXPANSION JOINTS

Expansion points in concrete structures shall be provided at 30-35 m centers. The expansion joint shall be provided preferably by way of twin columns on a common foundation. Sliding joints shall be avoided as far as possible.

5.9 DEFLECTIONS

5.9.1 Deflections in concrete structures shall in general be limited by adherence to the limits on span by depth ratio for beams and slabs and length to lateral dimension ratios for columns as prescribed in IS: 456. Where special functional / serviceability requirements or large spans demand actual deflections and / or crack widths shall be calculated and the following limits adhered to:

Total vertical deflection due to all loads including the : Span/250

Effects of temperature creep and shrinkage

Crack width (for non-liquid retaining structure) : 0.3 mm

Total horizontal deflection between two floors : Storey height/200

Crack width (for non-liquid retaining structures) : 0.3 mm

5.10 MISCELLANEOUS APPLICATIONS

5.10.1 Admixtures
Admixtures shall conform to IS: 9103 and to be mixed with concrete (if required) strictly as per manufacturer's recommendations.

5.10.2 Water for Construction
Water used for mixing and curing shall be clean and free from injurious amounts of soils, acids, alkalis, salts, sugar, organic materials or other substances that may be deleterious to concrete or steel. Portable water is generally considered satisfactory for mixing concrete. It should meet the requirement of IS: 456-2000.

5.10.3 Aggregates

These shall conform to IS: 383, specification for Coarse and Fine Aggregates from Natural resources.

5.10.4 Plinth protection

Each building shall be provided with 1.0 m wide concrete M10, 100 thick laid on 75 mm thick M7.5 concrete with 8 Tor @ 250 c/c both ways Reinforcement bars all round as plinth protection. A surface drain to be provided along-with plinth protection which shall be connected to the drainage system.

5.10.5 Ramps

Ramps for building entrance shall be cast in situ R.C.C. designed as a grade slab and the slope of ramps shall not be less than 1 in 10. Minimum thickness of the slab shall be 150 mm.

5.10.6 Hot Bitumen Paint

All underground structures including top surface of foundations shall be painted with two coats of hot bitumen paint of grade 20/30 with quantity of bitumen at least 1.2 kg/m² per coat.

5.10.7 Masonry Wall

a. All masonry walls from ground floor shall be placed on R.C.C. grade beams. However, light internal partitions may be placed on ground floor slab.
b. All brick masonry (M 7.5 MPa) grade walls shall be considered as 230 mm thick, except for partition walls which will be 115 mm thick. However, for fire barrier walls minimum thickness shall be considered as 350 mm.
c. All in-filled brick (M 7.5 MPa grade) panels shall be designed to transfer horizontal loads from wind and seismic to the structural frameworks without damage and the extent of brick panel dimensions shall be as per the recommendations in IS. All brickworks shall be provided with reinforcement consisting of 2 Nos. of 6 mm diameter bars at every fourth layer.

5.10.8 Anti-termite treatment

Anti-termite treatment shall be provided under all buildings as per IS:6313. Materials shall be as per IS:8944.

6.0 DESIGN CRITERIA FOR STEEL STRUCTURES

6.1 GENERAL / DESIGN METHODS

6.1.1 Design fabrication and erection of the above work shall be carried out in accordance with the following IS Codes as applicable to the specific structures, viz, IS:800, 801, 802, 806, 814, 816, 875, 1893, 6533, 9595, etc. Basic consideration of structural frame work shall primarily be stability, ease of fabrication/erection and overall economy, satisfying relevant Indian Standard Codes of Practice. Steel structures adequately braced in vertical and horizontal planes, consistent with functional requirements, shall be preferred over structure having moment connections. Moment connections, if adopted, shall be fully rigid as per IS:800. Where fully rigid joints are adopted they shall generally be confined to the major axis of the column member.

Structural elements, continuously exposed to temperatures above 200º C, shall be designed for reduced stress as per Table-4 of IS: 6533 (Part-2). The expected temperature of steel components shall not be allowed to exceed 400 º C. The structures connected to column, heater vessels working at high temperatures shall not be rigidly connected with staircase and adjoining structures, which are on ambient temperatures.

6.1.3 Monorails shall be provided for all pumps and motors located in buildings, sheds and in open areas having rating more than 55 KW. For pumps and motors of smaller ratings, monorails shall be provided if directed by Owner / PMC.

6.1.4 Steel staircases shall have channels provided as stringers with minimum clear width of 750 mm and maximum slope of 41 degree. The vertical height between successive landings shall not exceed 4.0 meters. Treads shall be minimum 230 m wide made of grating (with curved chequered plate nosing) spaced equally so as to restrict the rise to maximum 200 mm. If relevant local by-laws or applicable Factory Act Rules stipulates more stringent requirements in this regard, the same shall be adhered to.

6.1.5 Hand rails, 1000 mm high, shall be provided to all walkways, platforms, staircases. Toe plate (100 mm x 5 mm) shall be provided for all hand railing (except for staircases). Spacing of uprights shall be 1500 mm (maximum). Two types of hand railing shall be provided.

a. For walkways, platforms (except platform around/on circular & horizontal vessels), and staircases: Top rail, mid rail and upright shall be 32 mm dia. (NB) galvanized MS tubes.
b. For platforms around circular vessels : Top rail shall be 32 mm dia. (NB) galvanized MS tubes, but mid rail and upright shall be of structural steel.

6.1.6 Electro-forged/Welded hot dip galvanized MS gratings shall be minimum 25 mm deep. The maximum size of voids in the grating shall be limited to 30 mm x 55 mm. The minimum thickness of galvanizing shall be 120 microns. Gratings shall be suitable for the operation and maintenance loads for the floors

6.1.7 Welded connections shall be adopted as far as practicable, except for cases where bolted connections are required viz. (Galvanized) electrical switchyard structures and transmission towers. Structural connections shall have minimum two bolts of 16 mm dia. unless otherwise limited by the size of members

6.1.8 Lock nuts shall be provided for anchor bolts of tall structures, tall process columns, vibrating equipment, etc.

6.1.9 Minimum two nuts shall used for all anchor bolts except for ladder, stair and hand rail.

6.2 EXPANSION JOINTS

Expansion joints shall be provided at 80 – 100 m centres, where possible, column bracing shall be provided at the center of a longitudinal frame, rather than at the ends so as to avoid constraints on free expansion.

6.3 STEEL GRADE

Unless otherwise specified all structural steel (including open grating and raised pattern plates, shapes, bars, hollow sections) shall be Fe 250 conforming to Grade A of IS 2062.

All structural pipes shall conform to IS: 1161, GRADE YST-240. Structural pipes shall be either seamless or mild welded. Spiral welded pipe is not acceptable.

6.4 FIRE PROOFING OF STEEL STRUCTURES

Fire-proofing, wherever required as per OISD-STD-164, shall be carried out on exposed structural steel members in process, tankage, and other areas.

Fire-proofing shall be by trowel finished Vermiculite based material. It shall follow the contours of the steel member on which it is applied. Finished surface will be painted with a compatible paint as recommended by Fire Proofing Vendor. Minimum thickness for vermiculite shall be 38 mm. Fire rating shall be 2 hours.

6.5 LIMITING PERMISSIBLE STRESSES

- Permissible stresses in structural members shall be as specified in :

  IS: 800 - Hot rolled sections (excluding transmission towers and Switchyard structures).

- IS: 801 - Cold formed light gauge sections
- IS: 802 - Transmission towers & switchyard structures
- IS: 806 - Tubular Structures

- Permissible stresses in bolts shall be as specified in :-

- IS: 800 - Hot rolled sections
- IS: 801 - Cold formed light gauge sections
- IS: 802 - Transmission towers & switchyard structures
- IS: 806 - Tubular Structures

- Permissible stresses in welds shall be as specified in :-

- IS:801 - Cold formed light gauge sections
- IS: 806 - Metal Arc Welding

6.6 LIMITING DEFLECTION

a. The limiting permissible vertical deflection for structural steel members shall be as specified below :-

- Gantry girder for electric overhead crane(Capacity up to 50T) : L/750
- Gantry girder for electric overhead crane((Capacity over 50T) : L/1000
- Gantry girder for manually operated crane : L/500
- Girder beam for supporting dynamic equipment/hoist : L/450
- Grating / Chequered plate : L/200 or 6mm Whichever Is less
- Purlins supporting any type of roofing material : L/200

  Under (dead load + live load) or (dead load + wind Load) conditions
- Other structural components : As specified in relevant IS

Where “L” represents the span

b. The limiting permissible horizontal deflection for multistoried steel structure/ building including flare stack shall be Height/325.

6.7 MINIMUM THICKNESS

6.7.1 Structural Components

The minimum thickness of various structural components (Hot rolled sections) shall be as given:-

a. General Construction

Trusses, Purlins, Side Girts, Bracings	: 6 mm
Columns, beams	: 7 mm
Gussets in trusses & girders	
i. Upto and including 12 m span	: 8 mm
ii. Above 12 m span	: 10 mm
Flare Trestles, Stiffeners	: 8 mm
Base plates	: 10 mm
Chequered plate	: 6 mm (on plain)
Grating	: 3 mm

The minimum thickness for rolled beams and channels shall be mean flange thickness regardless of the web thickness.

The minimum thickness of tubes shall be as specified in IS:806.

For structural members exposed to marked corrosive action, corrosion allowance shall be added as specified elsewhere, or otherwise suitably protected against corrosion.

The minimum thickness of structural components (except gratings & chequered plates) which are directly exposed to weather and inaccessible for repainting shall be 8 mm.

6.9 PAINTING

Painting including shop primer to structural steel shall be as per the painting specification for this project, included elsewhere.

6.10 GROUTING

For structural columns : As required but not less than 25 mm

For equipment : As required but not less than 25 mm

6.11 CLADDING / RAINWATER GUTTERS

The roof and wall cladding for all sheds shall be Galvanized / Zinc coated profiled sheets. Translucent sheets shall be provided, in non-process areas only, intermittently where day lighting is required. Rainwater gutters of Galvanized / Zinc coated sheets and UPVC rainwater pipes shall be provided for proper roof drainage.

7.0 CRITERIA FOR MASONRY WORKS

7.1 GENERAL

All masonry works shall be designed in accordance with IS: 1905, IS: 1597, IS: 2185, IS: 4326 and other relevant IS Codes as applicable. All external brick, stone and hollow concrete block masonry walls shall be of minimum 230, 350 and 250 mm thickness respectively. Hollow concrete blocks shall conform to IS: 2185. Masonry shall be plastered with CM 1:6, 12 mm thick on inside surfaces and 20 mm thick on outside surfaces.

7.2 CEMENT MORTAR

All masonry work shall be constructed in 1:6 cement sand mortar except half brick partition walls which shall be constructed in 1:4 cement sand mortar with two numbers of 6 mm diameter MS bars provided a every fourth course properly anchored with cross walls or pillars.

8.0 DESIGN REQUIREMENTS FOR SPECIFIC APPLICATIONS

8.1 PIPERACK

For designing the piperack superstructure and foundation the following loads shall be considered:

8.1.1 Vertical Loading

Actual weights of pipes coming at each tier shall be calculated. In calculating the actual weight of pipe, the class of pipe, material content and insulation, if any, shall be taken into consideration. Insulation density shall be taken as 2600 N/m³ minimum. In case of gas / steam carrying pipes, the material content shall be taken as one-third volume of pipe filled with water. The total actual weight thus calculated, shall then be divided by the actual extent of the span covered by the pipes to get the uniformly distributed load per unit length of the span. To obtain the design uniformly distributed load, over the entire span, the u.d.l. obtained as above, shall be assumed to be spread over the entire span. However, minimum loading for any piperack shall not be less than 1.25 kN/m². In case, the calculated loading is higher than 1.25 kN/m², this shall be rounded off to the nearest multiple of 0.25 (i.e., 1.50, 1.75 kN/m²)

Vertical loads of flare pipe shall be taken as one third full of water for piping within units & one sixth full for outside unit battery line. All flare line independent support shall be of four legged braced open lower type construction.

In addition to piping load, gravity loads due to encasement, if any, shall be considered.

8.1.2 Friction Force (Longitudinal & Transverse)

Where the pipes are of similar diameter and service conditions, the friction force at each tier on every portal both in longitudinal and transverse directions, shall be 10% of the design vertical loading of the pipes for four or more pipes supported on a tier and 30% of the design vertical loading of the pipes, for single to three pipes supported on a tier. Longitudinal friction force shall be considered as uniformly distributed over the entire span of the beam at each tier and transverse friction force shall be considered as a concentrated load at each tier level. Friction forces on T-supports and trestles shall be taken as 30% of the vertical loading. Both longitudinal and transverse friction forces shall be considered to be acting simultaneously.

For two-phase fluid flow/transfer lines frictional force shall be minimum 50% of the weight of pipe including contents & insulation, acting simultaneously in transverse & longitudinal direction.

8.1.3 Anchor and Guide Force (Thermal Load)

Anchor and guide force (thermal load) in transverse and longitudinal direction shall be as per piping data.

8.1.4 Loading on intermediate Beam at Tier Level

Intermediate beam at tier level shall be designed for 25% of load on main portal beams in transverse direction. A reduction of 10% in vertical loading shall be considered for main portal beams, if intermediate beams are provided.

8.1.5 Loading on Longitudinal beams

Longitudinal beams connecting portal columns shall be sufficiently strong to sustain 25% of the load on the transverse beams. The total load shall be assumed as two equal concentrated loads acting at $1/3^{rd}$ span. Other longitudinal axial forces coming on it from the design of the supporting system shall also be simultaneously taken into account in the design of the longitudinal beam. Friction & anchor forces, if specifically given by the Piping Specialist, shall also be catered for in the design. Loads from monorails, when supported from these beams, shall also be considered to be acting simultaneously along with all other loads mentioned above.

8.1.6 Cable Tray and Walkway Loads

The estimated actual load from electrical, instrumentation trays shall be considered at the specified locations, together with walkways, platforms for valve operation, wherever provided.

8.1.7 Wind Force

Transverse wind loading shall be calculated depending on the width of the piperack as per the following table. This force shall be considered irrespective of the height between two tiers.

Width of Piperack	Wind Force at each Tier level(N)
Upto 4 m	1.25 x p x s
Above 4 m but upto 6 m	1.50 x p x s
Above 6 m but upto 10 m	2.00 x p x s
Above 10 m	projected height x p x s

Where p = Horizontal wind pressure as per IS:875 (N/m^2)

s = Spacing of portals (m)

For piperacks of width greater than 10 m, the projected height shall be lesser of the following two:

i) 0.8 x (diameter of largest pipe including insulation (m) + tan 10° x (width of rack (m).
ii) height between consecutive tiers

8.1.8 For flare header or any other line supported on extended leg of piperack, the wind force shall be considered separately.

8.1.9 Seismic Loads

Seismic loads shall be based on IS 1893(Part-1)-2002 & IS1893(Part-4)-2005.

8.1.10 Pipe racks should be adequately braced in all possible directions, consistent with function requirements.

8.1.11 Limiting permissible horizontal deflection for piperack shall be height / 325.

8.2 CULVERTS

Culverts shall be designed as per the following IRC codes of practices and manual. Where crane access is specified, the culverts shall be designed for the crane loads.

1. Standard specifications and code of practice for Road Bridges IRC 5

   (Section – I - General features of design)

2. Standard specifications and code of practice for Road Bridges IRC 6

   (Section-II – Load and Stresses)

3. Guidelines for Evaluation of Load Carrying Capacity of Bridges SP 37

Note: The above list is suggestive and not exhaustive. Apart from these basic codes any other related codes shall also be followed wherever required. This list is to be read in conjunction with the list of codes given in Civil Structural job specifications.

Sl. No.	DESCRIPTION		FLOORING TYPE		
			I	II	III
1.a	Sub Grade	Earth fill base compacted to 95% dry density	YES	YES	YES
1.b		Rubble soling	230 THICK	230 THICK	150 THICK
2.a	Structural Grade Slab	Lean concrete 1:5:10 over 1.b layer	50 THICK	50 THICK	50 THICK
2.b		Stable in Grade M20 concrete (Reinforced with 8 mm dia bars @ 200 c/c both ways) over lean concrete	150 THICK	150 THICK	100 THICK
			R/F placed centrally	R/F placed in two layers at top & bottom	No reinforcement required
3	Finish	Floor finish	As/Architectural detail	As/Architectural detail	As/Architectural detail

TYPE I: Plant buildings such as Sub-stations, Control Rooms, Process Operators' Room, Pump Houses, Utility Compressor Houses, D.M. Plant, E.T.P., Parking Areas, Stores, Porches.

TYPE II : Warehouses, Workshops, Cement Godowns, Fire Stations, Process Compressor House.

TYPE III: Non Plant Buildings (viz. Administration, Laboratory, Canteen, Time Office, Gate House, Training Centre, Guest House, Residential Building)

Note: 1. Reinforcement steel shall be as per clause 5.5

TECHNICAL SPECIFICATIONS

FOR

CIVIL, STRUCTURAL
AND
OTHER ALLIED WORKS

CONTENTS

SL. NO.	DESCRIPTION
1.	GENERAL
2.	REFERENCE CODES AND STANDARDS
3.	EARTH WORK
4.	PLAIN AND REINFORCED CONCRETE WORK
5.	STEEL REINFORCEMENT
6.	FORM WORK
7.	HOLLOW BLOCK MASONRY
8.	STRUCTURAL STEEL WORK
9.	PAINTING ON STRUCTURAL STEEL
10.	STEEL/ALUMINIUM DOORS,WINDOWS AND VENTILATORS
11.	ROOFING & CLADDING
12.	FLOORING AND PAVING
13.	PLASTERING
14.	EXTERIOR PAINTING
15.	GLAZING
16.	PROTECTIVE COATING AND LINING SYSTEM
17.	CULVERT WORK

1.0 General

1.1 Specifications of materials and workmanship shall be as described in the Central Public Works Department Specifications Vol. I & II (latest) include latest amendments, unless otherwise specified. These CPWD Specifications shall be deemed to form part of this contract. The **CONTRACTOR** shall procure and maintain copies of the latest CPWD Specifications at site for reference.

1.2 These technical Specifications shall be supplementary to the specifications contained in the CPWD specifications, wherever at variance, these Particular Specifications shall take precedence over the provisions in the CPWD Specifications.

2.0 Reference Codes & Standards

2.1 Wherever reference of IS Specifications/ or IS Codes of Practice are made in the Specifications/ Schedule of Rates or Preambles, reference shall be to the latest edition of IS (Bureau of Indian Standards).

IS - 383	Coarse & Fine aggregates from natural sources for concrete.
IS - 427	Distemper, dry, colour as required.
IS - 432	Mild Steel & Medium tensile steel bars.
IS - 456	Code of Practice for Plain and Reinforced Concrete.
IS - 515	Natural and Manufactured aggregates for use in mass concrete
IS - 730	Hook bolts for corrugated sheet roofing
IS - 800	Code of Practice for General Construction in Steel
IS - 1079	Hot rolled carbon steel sheets & strips
IS - 1081	Code of practice for fixing and glazing of metal (steel & aluminium) doors, windows and ventilators.
IS - 1161	Steel tubes for structural purposes.
IS - 1285	Wrought aluminium & aluminium alloy extruded round tube and hollow sections
IS - 1361	Steel windows for Industrial Buildings.
IS - 1363	Hexagon head bolts, screws & nuts of product grade C : Part - I Hexagon head bolts (size range M5 to M64)

IS - 1367	Technical supply conditions for threaded steel fasteners
IS - 1566	Hard - Drawn steel wire fabric for concrete reinforcement.
IS - 1786	High strength deformed steel bars & wires for concrete reinforcement.
IS - 2062	Steel for general structural purposes.
IS - 2116	Sand for masonry mortars.
IS - 2212	Code of practice for brickwork.
IS - 2386	Methods of test for aggregates.
IS - 2835	Flat transparent sheet glass
IS - 4021	Timber door, window and ventilator frames
IS - 4923	Hollow Steel sections for structural use.
IS - 4925	Concrete batching and mixing plant.
IS - 5410	Cement Paint
IS - 6477	Dimensions for wrought aluminium & aluminium alloys, extruded hollow sections.
IS - 7318	Fusion welding of steel.
IS - 10262	Recommended guidelines for concrete mix design.
IS - 14871	Products in Fibre Reinforced Cement – Long Corrugated or Asymmetrical Section Sheets and Fittings for Roofing and Cladding - Specification

3.0 Earthwork

3.1 Excavation

3.1.1 Excavation shall be carried out in soil of any nature and consistency, in the presence of water or in the dry, met on the site to the lines, levels and contours shown on the detailed drawings and **CONTRACTOR** shall remove all excavated materials to soil heaps on site or transport for use in filling on the site or stack them for reuse as directed by the Engineer-in-Charge.

3.1.2 Surface dressing shall be carried out on the entire area occupied by the buildings including plinth protection as directed without any extra cost. The depths of excavation shown on the drawings are the depths after surface dressing.

3.1.3 The site around all buildings and structures to a width of 3 metres beyond the edge of plinth protection, ramps, steps, etc. shall be dressed and sloped away from the buildings.

3.1.4 Black cotton soil, and other expansive or unsuitable soils excavated shall not be used for filling in foundations, and plinths of buildings or in other structures including manholes, septic tanks etc. and shall be disposed off within the contract area marked on the drawings, as directed, levelled and neatly dressed.

3.1.5 In case of trenches exceeding 2 metres depth or where soil is soft or slushy, the sides of trenches shall be protected by timbering and shoring. The **CONTRACTOR** shall be responsible to take all necessary steps to prevent the sides of trenches from caving in or collapsing. The extent and type of timbering and shoring shall be as directed by the **Engineer-in-Charge.**

3.1.6 Where the excavation is to be carried out below the foundation level of adjacent structure, the precautions to be taken such as under pinning, shoring and strutting etc. shall be determined by **Engineer-in-Charge**. No excavation shall be done unless such precautionary measures are carried out as per directions of **Engineer-in-Charge.**

3.1.7 Specification for Earth work shall also apply to excavation in rock in general. The excavation in rock shall be done such that extra excavation beyond the required width and depth as shown in drawings is not made. If the excavation done in depth greater than required /ordered. The **CONTRACTOR** shall fill the extra excavation with concrete of mix 1:5:10 as the foundation concrete at his own cost.

3.1.8 **CONTRACTOR** shall make all necessary arrangements for dewatering / defiling as required to carry out proper excavation work by bailing or pumping out water, which may accumulate in the excavation pit from any cause/ source whatsoever.

3.1.9 **CONTRACTOR** shall provide suitable draining arrangements at his own cost to prevent surface water entering the foundation pits from any source.

3.1.10 The **CONTRACTOR** is forbidden to commence the construction of structures or to carry out concreting before **Engineer-in-Charge** has inspected, accepted and permitted the excavation bottom.

3.1.11 Excavation in disintegrated rock means rock or Boulders including brickbats which may be quarried or split with crow bars. This will also include laterite and hard conglomerate.

3.1.12 Excavations in hard rock - meant excavation made in hard rock to be done manually, or by blasting using only explosives and / or pneumatic hammers. In case of blasting, control blasting should be adopted depending on site conditions. For using explosives **CONTRACTOR** shall follow all provisions of Indian Explosives Act / Rules 1983, corrected / revised up to date.

3.1.13 In case of hard rock excavation to be carried out using explosives the, **CONTRACTOR** shall obtain the written approval in advance.

3.1.14 The measurements for excavations shall be restricted and limited to minimum excavation line as per drawing for payment purposes.

3.1.15 Adequate protective measures shall be taken to see that the excavation does not affect or damage adjoining structures. The **CONTRACTOR** shall take all measures required for ensuring stability of the excavation and safety of property and people in

the vicinity. The **CONTRACTOR** shall erect and maintain during progress of work, temporary fences around dangerous excavations at no extra cost.

3.1.16 Excavation in ordinary soil means excavation in ordinary hard soil including stiff heavy clay, hard shale, or compact moorum, or any materials, which can be removed by the ordinary application of spades, shovels, picks and pick axes. This shall also include removal of isolated boulders each having a volume not more than 0.50m³.

3.1.17 Excavation in soft rock includes limestone, sandstone, laterite, hard conglomerates, etc. or other rock which can be quarried or split with crowbars or wedges. This shall also include excavation of tarred pavements, masonry work and rock boulders each having a volume of not more than 0.25m³.

3.1.18 Excavation in hard rock includes any rock bound in ledges or masses in its original form or cement concrete for which in the opinion of the Engineer-in-Charge, requires the use of compressed air, equipment, sledge hammer and blasting or non-explosive materials viz. Acconex manufactured by A.C.C. Ltd. Specifications and instructions for use shall be as per manufacturer.

3.1.19 In case of any difficulty concerning the interpretation of type of soil as mentioned above, the Engineer-in-Charge shall decide whether the excavation in a particular material is in ordinary soil, soft rock or hard rock and his decision in this matter shall be final and binding on the CONTRACTOR and without appeal.

3.2 Filling

3.2.1 Back filling of excavations in trenches, foundations and elsewhere shall consist of one of the following materials approved by **Engineer-in-Charge.**

1) Soil
2) Sand
3) Moorum
4) Hard-core
5) Stone/gravel

All back filling material shall be approved by the **Engineer-in-Charge.**

3.2.2 Soil filling - Soil material shall be free from rubbish, roots, hard lumps and any other foreign organic material. Filling shall be done in regular horizontal layers each not exceeding 20 cm. depth.

3.2.3 Back filling around completed foundations, structures, trenches and in plinth shall be done to the lines and levels shown on the drawings.

3.2.4 Back filling around pipes in the trench shall be done after hydro testing is done.

3.2.5 Back filling around liquid retaining structures shall be done only after leakage testing is completed and approval of **Engineer-in-Charge** is obtained.

3.2.6 Sand used for filling under foundation concrete, around foundation and in plinth etc. shall be fine/ coarse, strong, clean, free from dust, organic and deleterious matter. The sand filling under foundation shall be rammed with Mech. compactor. Sand material shall be approved by **Engineer-in-Charge**.

3.2.7 Moorum for filling, where ordered, shall be obtained from approved pits and quarries which contain siliceous material and natural mixture of clay. Moorum shall not contain any admixture of ordinary earth. Size of moorum shall vary from dust to 10 mm.

3.2.8 Hard-core shall be of broken stone of 90 mm to 10 mm size suitable for providing a dense and compact sub grade. Stones shall be sound, free from flakes, dust and other impurities. Hard core filling shall be spread and levelled in layers, 15 cm thick, watered and well compacted with ramming or with mechanical / hand compacts including hand packing wherever required.

3.2.9 If any selected fill material is required to be borrowed, **CONTRACTOR** shall make arrangements and procure such material from outside borrow pits. The material of source shall be subject to prior approval of **Engineer-in-Charge**. **CONTRACTOR** shall make necessary access roads to borrow areas and maintain the same, if such access roads do not exist, at no extra cost.

3.2.10 Plinth filling shall be carried out with approved material as described earlier, in layers not exceeding 150mm, watered and compacted with mechanical compaction machines. **Engineer-in-Charge** may however permit manual compaction by hand tampers in case he is satisfied that mechanical compaction is not possible. When filling reaches the finished level, the surface shall be flooded with water, unless otherwise directed, for at least 24 hours, allowed to dry and then the surface again compacted as specified above to avoid settlements at later stage. The finished level of the filling shall be trimmed to the level specified. Compacted surface shall have at least 95% of laboratory maximum dry density. A minimum of one test per 250 sq. meters of compacted area shall be done.

3.2.11 Whenever the fill material (earth or soil) is purchased, **CONTRACTOR** shall get the approval of Engineer-in-Charge. The CONTRACTOR shall arrange to determine the following properties of the soil and shall get the approval of **Engineer-in-Charge**.

1. Clay content : 15% to 20%
2. Laboratory dry density : Not less than 1600 kg/m^3
3. Plasticity Index : Not more than 20

3.2.12 The fill shall be compacted using a vibrating compactor of not less than 1.5 tonne. The fill shall be thoroughly compacted in layers as directed but not more than 200 mm thick. Adequate water shall be used for compaction and the density after compaction shall be not less than maximum dry density obtained in test of IS: 2720 Part-8. Compacted surface shall have at least 90% of laboratory maximum dry density. A minimum of one test per 250 sq. meters of compacted area shall be done.

3.2.13 The Gravel fill shall be non plastic granular material, well graded, strong, with maximum particle size of 50 mm, with not more than 15% passing a 4.75 mm IS sieve, free of all debris, vegetable matter and chemical impurities.

3.2.14 All clods, lumps etc. shall be broken before compaction.

3.2.15 In case of grading/banking successive layers of filling shall not be placed, until the layer below has been thoroughly compacted to satisfy the requirements laid down in this specification.

Prior to rolling, the moisture content of material shall be brought to within +/-2% of the optimum moisture content as described in IS 2720 Part-7. The moisture content shall preferably be on the wet side for potentially expansive soil.

After adjusting the moisture content as described, the layers shall be thoroughly compacted by means approved by Engineer-in-Charge, till the specified maximum laboratory dry density is obtained.

General, fill shall be placed in layers not exceeding 300 mm thickness and shall be thoroughly compacted to achieve a compaction of at least 90% of laboratory maximum dry density up to a depth of 600 mm below finished grade. Final fill of 600 mm thickness shall consist of preferably natural material in, as dug condition except that stones larger than 100 mm shall be removed. It shall be placed in layers not exceeding 150 mm thickness and compacted to achieve of at least 95% of laboratory maximum dry density. Each layer shall be tested in field for density and accepted by Engineer-in-Charge, subject to achieving the required density before laying the next layer. A minimum of one test per 250 sq meters for each layer shall be conducted.

If the layer fails to meet the required density, it shall be reworked or the material shall be replaced and method of construction altered as directed by Engineer-in-Charge to obtain the required density.

The filling shall be finished in conformity with the alignment, levels, cross-section and dimensions as shown in the drawing.

Extra material shall be removed and disposed off as directed by the **Engineer-in-Charge.**

4.0 Plain and Reinforced Concrete Work

This specifications deals with cement concrete, plain or reinforced, for general use, and covers the requirements for concrete materials, their storage, grading, mix design, strength & quality requirements, pouring at all levels, reinforcements, protection, curing, form work, finishing, painting, admixtures, inserts and other miscellaneous works.

4.1 Materials

4.1.1 Cement: Any of the following cements may be used as required.

IS - 269	Ordinary Portland cement, 33 grade
IS - 8112	43 Grade ordinary Portland cement
IS - 12269	53 Grade ordinary port land cement

4.1.2 Water: Water used for mixing and curing concrete and mortar shall conform to the requirements as laid down in IS: 456. Sea water shall not be used for concrete work.

4.1.3 Aggregates: Coarse and fine aggregates for cement concrete plain and reinforced shall conform to the requirements of IS 383 and / or IS 515. Before using, the aggregates shall be tested as per IS: 2386.

Coarse aggregate: Coarse aggregate for all cement concrete work shall be broken or crushed hard stone, black trap stone obtained from approved Quarries or gravel.

Sand: Fine aggregate for concrete work shall be coarse sand from approved sources. Grading of coarse sand shall be within grading zones I, II or III laid down in IS: 383, table 4. If required the aggregates (both fine and coarse) shall have to be thoroughly washed and graded as per direction of **Engineer-in-Charge**.

4.2 Mixing

All cement concrete plain or reinforced shall be machine mixed. Mixing by hand may be employed where quantity of concrete involved is small, with the specific prior permission of the **Engineer-in-Charge**. 10% extra cement shall be added in case of hand mixing as stipulated in IS-456.

For large and medium project sites the concrete shall be sourced from ready- mixed concrete plants or from on site or off site batching and mixing plants (IS 4926)

4.3 Water Cement Ratio, Laying & Curing

Water Cement Ratio, Laying & Curing shall be done as per IS:456.

4.6 Grades of Concrete

4.6.1 Grades lower than M 25 shall not be used in reinforced concrete.

4.6.2 A sieve analysis test of aggregates shall be carried out as and when the source of supply is changed without extra charge notwithstanding the mandatory test required to be carried out as per CPWD specification.

4.6.5 All tests in support of mix design shall be maintained as a part of records of the contract. Test cubes for mix design shall be prepared by the CONTRACTOR under his own arrangements and at his costs, but under the supervision of the **Engineer-in-Charge**.

4.7 Design Mix Concrete

4.7.1 Design mix shall be allowed for major works where it is contemplated to be used by installing weigh batch mixing plant as per IS 4925. At the time of tendering, the CONTRACTOR, after taking into account the type of aggregates, plant and method of laying he intends to use, shall allow in his tender for the design mix i.e., aggregate/cement and water/cement ratios which he considers will achieve the strength requirements specified, and workability for concrete to be properly finished.

4.8.2 Before commencement of concreting, **CONTRACTOR** shall carry out preliminary tests for design mix on trial mixes proposed by him in design of mix to satisfy the **Engineer-in-Charge** that the characteristic strength is obtained. In this regard, CONTRACTOR may consult govt. approved/reputed

institute to get design mix done as per IS 10262 at his own cost. The concrete mix to be actually used shall be approved by the **Engineer-in-Charge**.

4.8.3 Notwithstanding the above, the following shall be the maximum combined weight of coarse and fine aggregate per 50 kg of cement.

Grade of Concrete	Maximum weight of fine & coarse aggregates together per 50 kg of cement (for nominal mix only)
1. M - 10	480 kg
2. M - 15	350 kg
3. M - 20	250 kg

4.8.4 The workability of concrete produced shall be adequate, so that the concrete can be properly placed and compacted. The slump shall be as per IS 456.

4.8.5 The minimum consumption of the cement irrespective of design mix shall not be less than the following:

M 7.5 (1:4:8)	170 kg/cu m
M 10 (1:3:6)	220 kg/cu m
M 15	300 kg/cu m
M 20	350 kg/cu m
M 25	400 kg/cu m

4.9 Testing of Concrete

4.9.1 Testing of concrete, sampling and acceptance criteria shall be in accordance with IS 456.

4.10 Proportioning

Mixes of cement concrete shall be as ordered. Where the concrete is specified by grade, it shall be prepared by mixing cement, sand and coarse aggregate by weight as per mix design. In case the concrete is specified as volumetric mix, then dry volume batching shall be done, making proper allowances for dampness in aggregates and bulking in sand. Equivalent volume batching for concrete specified by grade may however be allowed by the **Engineer-in-Charge** at his discretion.

4.11 Pre Cast Concrete

The specifications for pre cast concrete will be similar as for the cast in situ concrete. All pre cast work shall be carried out in a yard made for the purpose. This yard shall be dry, properly levelled and having a hard and even surface. If the ground is to be used as a soft former of the units, shall be paved with concrete or masonry and provided with a layer of plaster (1:2 proportion) with smooth neat cement finish or a layer of MS sheeting. The casting shall be over suitable vibrating tables or by using form vibrators as per directions of **Engineer-in-Charge**.

The yard, lifting equipment, curing tank, finished material storage space etc. shall be designed such that the units are not lifted from the mould before 7 (seven) days of curing and can be removed for erection after 28 (Twenty Eight) days of curing. The moulds shall preferably be of steel or of timber lined with G.I .sheet metal. The yard shall preferably be fenced.

Lifting hooks, wherever necessary or as directed by **Engineer-in-Charge** shall be embedded in correct position of the units to facilitate erection, even though they may not be shown on the drgs. and shall be burnt off and finished after erection.

Pre cast concrete units, when ready shall be transported to site by suitable means approved by **Engineer-in-Charge**. Care shall be taken to ensure that no damage occurs during transportation. All adjustments, levelling and plumbing shall be done as per the instructions of the **Engineer-in-Charge**. The CONTRACTOR shall render all help with instruments, materials and staff to the **Engineer-in-Charge** for checking the proper erection of the pre cast units.

After erection and alignment the joints shall be filled with grout or concrete as directed by **Engineer-in-Charge**. If shuttering has to be used for supporting the pre cast unit they shall not be removed until the joints has attained sufficient strength and in no case before 14 (fourteen) days. The joint between pre cast roof planks shall be pointed with 1:2 (1 cement : 2 sand) mortar.

5.0 STEEL REINFORCEMENT

5.1 Steel reinforcement shall comprise:

1) Mild steel bars conforming to IS : 432 Part-I.
2) Cold twisted bars conforming to IS: 1786
3) CRS bars
4) TMT bars
5) Hard drawn steel wire fabric conforming to IS: 1566

5.2 All joints in reinforcement shall be lapped adequately to develop the full strength of the reinforcement as per provision of IS: 456 or as per instruction of **Engineer-in-Charge**.

6.0 Form Work

6.1 The shuttering or form work shall conform to the shape, lines and dimensions as shown on the drawings and be so constructed as to remain sufficiently rigid during placing and compacting of the concrete and shall be sufficiently tight to prevent loss of liquid from the concrete. The surface that becomes exposed on the removal of forms shall be examined by **Engineer-in-Charge** or his authorized representative before any defects are made good. Work that has sagged or bulged out, or contains honey combing, shall be rejected. All shuttering shall be plywood or steel shuttering.

6.2 The **CONTRACTOR** shall be responsible for sufficiency and adequacy of all form work. Centering and form work shall be designed & detailed in accordance with IS 14687 and approved by the **Engineer-in-Charge**, before placing of reinforcement and concreting.

6.3 Stripping Time

Forms shall not be struck until the concrete has reached strength at least twice the stress to which the concrete may be subjected at the time of removal of form work. The strength referred to shall be that of concrete using the same cement and aggregates, with the same proportions and cured under conditions of temperature and moisture similar to those existing on the work. Where possible, the form work shall be left longer as it would assist the curing.

Note 1: In normal circumstances and where ordinary Portland Cement is used, forms may generally be removed after the expiry of the following periods:

1.	Walls, columns and vertical faces of all structural members	24 to 48 hours as may be decided by the **Engineer-in-Charge**
2.	Slabs (props left under)	3 days
3.	Beam soffits (Props left under)	7 days
4.	Removal of props under slabs 1. Spanning up to 4.5 m 2. Spanning over 4.5 m	 7 days 14 days
5.	Removal of props under beams & arches: 1. Spanning up to 6 m 2. Spanning over 6m	 14 days 21 days

For other types of cements, the stripling time recommended for ordinary Portland Cement may be suitably modified.

Note 2: The number of props left under, their sizes and disposition shall be such as to be able to safely carry the full dead load of the slab, beam or arch as the case may be together with any live load likely to occur during curing or further construction.

7.0 Cement Concrete Block

Cement concrete block shall be machined made in the proportion of such that mix shall not be leaner than one cement to twelve combined aggregates (by volume) but having minimum strength of 7.5 MPa. Combined aggregate shall be graded as near as possible to IS: 383. The fineness modules of combined aggregate shall be between 3.6 and 4. The concrete block shall be properly cured as per IS-456. The surface of conc. block shall have even face without any honeycomb and free from cracks.

7.7.1 **Mortar**

Cement and water shall confirm to the requirements laid down for cement concrete work.

7.7.2 Sand for concrete block masonry mortars shall be coarse sand generally conforming to IS: 2116. Maximum quantities of clay, fine dust, shall not be more than 5% by weight. Organic impurities shall not exceed the limits laid down in IS: 2116.

7.7.3 Mix of mortar for building concrete block shall be as specified in the item of work.

7.7.4 Mixing of the mortar shall be done in a mechanical mixer. When quantity involved is small hand mixing may be permitted by **Engineer-in-Charge**. Any mortar remaining unused for more than 30 minutes after mixing shall be rejected.

7.8 Concrete Block Masonry

The thickness of joints shall be 10 mm +- 3mm. Thickness of joints shall be kept uniform. In case of foundation and manholes etc. joints up to 15 mm may be accepted.

7.9 Half Concrete Block

All courses shall be laid with stretchers. Reinforcement comprising 2 nos. 6 mm dia MS bars shall be provided over the top of the first course and thereafter at every fourth course.

7.10 Fixtures

All iron fixtures, pipes spouts, hold fasts of doors and windows which are required to be built into the wall shall be embedded in cement concrete blocks 1:2:4 mix (1 cement :2 coarse sand :4 graded stone aggregate. 20 mm nominal size) of size indicated in the item.

7.11 Curing

Concrete block masonry shall be protected from rain by suitable covering when mortar is green. Masonry work shall be kept constantly moist on all faces for a minimum period of seven days.

8.0 STRUCTURAL STEEL WORK

This specification covers the technical requirements for the preparation of shop drawings, supply, fabrication, protective coating, painting and erection of all structural steel rolled sections, built up sections, plates and miscellaneous steel required for the completion of the work.

Steel

All structural steel used in construction within the purview of this contract shall, comply with one of the following Bureau of Indian Standard Specifications, whichever, is appropriate or as specified.

IS – 2062	Hot rolled sections and plates
IS – 1079	Cold formed light gauge sections
IS – 1161	Tubular sections
IS – 4923	Hollow sections (rectangular or square)

Fabrication

Fabrication of steel structure shall be carried out in conformity with the best modern practices and with due regard to speed with economy in fabrication and erection and shall conform to IS-800. All members shall be so fabricated as to assemble the members accurately on site and erect them in correct positions. Before dispatch to site the components shall be assembled at shop and any defect found rectified. All members shall be free from kink, twist, buckle, bend, open joints etc. and shall be rectified before erecting in position. Failure in this respect will subject the defective members to rejection.

Fabrication Drawings:

Connections, splices and other details shall be suitably designed based on good Engineering practice.

Electrodes:

Electrodes used for welding shall comply with IS-814 or IS - 815.

8.1 MS Black/High Strength Bolts and Nuts

M.S.Black or high strength bolts, nuts and washers etc. shall be as per IS-800, IS-1363 and IS-1367. Manufacturer's test certificate shall be made available to the **Engineer-in-Charge**. For bolted joints, shanks and threaded bolts are to be used to ensure that threaded length do not encroach within the thickness of connected members of dimension beyond the following limit:-

1. 1.5 mm for connected members of thickness below 12 mm and
2. 2.5 mm for connected member of thickness 12 mm and above and that adequate shearing and bearing values required as per design are achieved.

9.0 PAINTING ON STRUCTURAL STEEL

The following specification shall be used for painting of structural steel work.

9.1 Scope (in non coastal area)

This specification shall be used in non coastal area.

Surface Preparation

The surfaces to be painted shall be sand blasted to Sa - 2.5 as per Swedish Standard SIS 05-59-00. Air used for sand blasting must be dry and oil free. Sand used for sand blasting shall be good quality river sand suitable for achieving the required surface finish. For optimum results pressure of sand blasting gun should be maintained at around 7 kg/cm^2 and maximum height of profile should be kept around 50 microns. Sand blasted surfaces must be coated with primer within 4 hrs in dry climate. Moreover it is not advisable to carry out sand blasting when humidity exceeds 85% (RH).

9.1.1 Scope (in coastal area)

This specification shall be used in coastal area.

Surface Preparation

The surfaces to be painted shall be sand blasted to Sa - 2.5 as per Swedish Standard SIS 05-59-00. Air used for sand blasting must be dry and oil free. Sand used for sand blasting shall be good quality river sand suitable for achieving the required surface finish. For optimum results pressure of sand blasting gun should be maintained at around 7 kg/cm^2 and maximum height of profile should be kept around 50 microns.

Sand blasted surfaces must be coated with primer within 2 hrs in dry climate. Moreover it is not advisable to carry out sand blasting when humidity exceeds 50% (RH).

9.1.2 Painting system to be used is indicated below:

1. Epoxy Painting:

Primer P 1-2 coats + finish paint FP1 (2 coats) where P1 is epoxy polyamide cured zinc chromate primer having DFT of 35 micron per coat and FP1 is epoxy

polyamide cured finish paint having DFT (Dry Film Thickness) of 35 micron per coat.

Equivalent product chart for approved paint manufactures for primer P1 finish paint FP1 indicated above is enclosed.

2. For PU painting:

i. P1 - One coat of Ethyl silicate inorganic zinc primer having DFT of 70 microns per coat.

ii. IP1 - One coat of Epoxy MIO having DFT of 70 microns per coat.

iii. FP1 - One coat of finish epoxy paint using two pack Polyamide cured epoxy having DFT of 40 microns per coat.

iv. FP-2 - One coat of Aliphatic Acrylic Polyurethane paint having DFT of 40 microns per coat.

Equivalent product chart for approved paint manufactures for P1, IP1, FP1 & FP2 indicated above is enclosed.

9.1.3 All the surfaces must be sand blasted and 2 coats of primer plus 1 coat of finish paint applied in the shop before the same are shifted to site for erection. All the members must be suitably match marked for facilitating proper assembly.

After erection is over all surfaces shall be washed up as follows:

1. Washing with clean water (pressure 7 kg/cm^2) using suitable nozzles. During washing broom corn brushes shall be used to remove foreign matters.
2. Solvent washing if required to remove traces of oil grease etc.
3. After washing the surface as indicated above, the surfaces shall be suitably touched up to the extent required so that all the damages to the premiered surfaces caused during erection are done up.

   The surfaces affected by welding and / or gas cutting during erection shall also be suitably touched up. Before touch up is taken up surfaces shall be prepared by

mechanical means such as grinding, power brushing etc. to achieve surface finish to ST-3.

After touch up work is over as indicated above, all the surfaces shall be given one coat of finish paint to the required specification.

9.1.4 The following points must be observed for painting work:

1. Primer and paint shall be compatible to each other and should be from the same manufacturer.
2. The recommendation of the paint manufacturer regarding mixing, matching and application must be followed meticulously.
3. Technical representative of paint manufacturer should be available at site as and when required by **Engineer-in-Charge** for their expert advice as well as to ensure that the painting work is executed as per the instruction of paint manufactures.

   Paints and primers shall be supplied at site in original container with factory seal otherwise such paints and primers shall not be allowed to be used. Mode of application i.e. by spray, brush or roller shall be strictly as per recommendation of paint manufacturer.

   Painting materials must be used before the expiry date indicated on the containers.

   Number of coats and DFT per coat must be strictly followed as indicated above. If the desired DFT is not achieved for primer and finish paints in two coats (each), **CONTRACTOR** shall be required to apply extra coat (s) to achieve the desired DFT without any extra cost to **Engineer-in-Charge**.

   Colour shade for each coat of primer and finish paint must be different to identify the coats without any ambiguity.

   Shade for the final finish coat shall be decided by **Engineer-in-Charge** at site.

   All painting materials must be accompanied by manufacturers test certificates. However, **Engineer-in-Charge** has any doubt regarding quality of materials, he shall have the right to direct **CONTRACTOR** to get the doubtful material tested or and provided (by **CONTRACTOR**) testing agencies for which no extra payment shall be made to the **CONTRACTOR** and the charges shall deemed to be covered in the unit rates quoted for fabrication and erection of structural work.

   DFT for paint shall be measured at least 20 points and mean DFT shall not vary by more than 10% than specified in DFT.

   Instrument for measurement of DFT shall be arranged and provided by **CONTRACTOR** at his cost.

   Thickness of each coat shall also be checked regularly to ensure uniformity in DFT.

9.1.5 Sand blasting and painting works, being a specialized job must be carried out through the approved agencies only.

9.1.6 Equivalent Chart for Various Paint Manufacturers for Epoxy paint

	ASIAN	**G & N**	**SHALIMAR**	**J & N**	**BERGER**	**BOMBAY**
P1	APCODUR - Epoxy Zinc Chrome Primer	AMERCO AT-71	EPIGARD-4 Zinc Chromate Primer	EPILAC Zinc Chromate Primer	EPILUX-4 Zinc Chromate Primer	PENTADUR PRIMER 1532
FP1	APCODUR CF 692	NEROLAC TWO COMP EPOXY	EPIGARD XL FINISH	EPILAC 974 ENAMEL	EPILUX-4 ENAMEL	PENTADUR ENAMEL 5534 GRAY

9.1.7 Equivalent Chart for Various Paint Manufacturers for PU paint

CODE	ITEM	DFT PER COAT (MICRONS)	ASIAN	G & N	SHALIMAR	J & N	BERGER	BOMBAY
P1	ETHYL SLILICATE INORGA-NIC ZINC PRIMER	70	APCOSIL 601	DYMET - COTE - 9	TUFFKOTE ZILICATE	J&N INORGA-NIC ZINC SILICATE PRIMER	ZINC ANODE 304	HEAPELS GALVO-SIL 1570
IP1	EPOXY MIO	70	APCO-DUR MIO	AMER COAT 385	EPIGUARD HB MIO	EPILAC HB MIO	EPILUX-4 HB MIO	PENTA-DUR HB MIO 4567

FP1	TWO PACK POLYA-MIDE CURED EPOXY	40	APCO-DUR CF-692	NERO-LAC TWO COMP EPOXY	EPIGUARD XL	EPILAC 974	EPILUX-4 ENAMEL	PENTA-DUR ENAMEL 5534
FP2	ALIPHA-TIC ACRYLIC POLYURE-THANE PAINT	40	APCO-THANE 674	AMER-COAT 450 GL	SHALI-THANE	JN 992 PU FINISH PAINT	BERGA-THANE ENAMEL	PENTO-THANE 4513

10.0 Steel / Aluminium Doors, Windows and Ventilators

10.1 The Steel doors, windows and ventilators shall be of the size and type as per IS-1361 and IS-1038. Fixing and glazing shall be done as per IS-1081 and as per manufacturer's instructions. The putty of approved make such as special gold size or equivalent conforming to IS-419 shall be used.

10.2 Aluminium doors, windows and ventilators shall be manufactured from wrought aluminium and aluminium alloy extruded round tube and / or hollow rectangular / square sections conforming to IS: 1285 & IS : 6477 or equivalent as approved by **Engineer-in-Charge**.

11.0 **ROOFING & CLADDING**

For roofing & cladding Non-asbestos high impact Polypropylene reinforced cement 6mm thick corrugated sheets (as per IS:14871) roofing upto any pitch and fixing with polymer coated J or L hooks, bolts and nuts 8mm dia. G.I. plain and bitumen washers or with self drilling fastener and EPDM washer.

12.0 FLOORING AND PAVING

12.1 Sub Base of floor

12.1.1 The area to be paved shall be divided into suitable panels. Form work shall be provided. The boarding / battens shall be fixed in position with their toe at proper level, giving slope where required. Alternatively base concrete may be deposited in the whole area at a stretch.

12.1.2 Before placing the base concrete the sub-base shall be properly wetted and rammed. The concrete of the specified mix shall then be deposited between the forms where provided, thoroughly tamped and the surface finished level with the top edge of the forms. The surface of base concrete shall be spreader uniformly. The surface shall be finished rough to provide adequate bond for the topping. Two or three hours after concrete has been laid the surface shall be brushed with wire brush to remove any scum or Latinate and swept clean so that coarse aggregate is exposed.

12.2 Cement Concrete Floor Finishes

12.2.1 The surface of base concrete shall be thoroughly cleaned by scrubbing with coir or steel wire brush. Before laying the toping, the surface shall be soaked with water at least for 12 hours and surplus water mopped up immediately before the toping is laid.

12.2.2 The forms shall be fixed over the base concrete dividing into suitable panels. Where glass dividing strips are provided, thickness of glass dividing strips shall be 4 or as indicated. Before placing the concrete toping, neat cement slurry at the rate of 2 kg/sq.m shall be then thoroughly brushed into the base concrete just ahead of the finish. The topping shall then be laid, thoroughly compacted by using screed board/plate vibrator. The surface floated with a wooden float to a fair and even surface shall be left for some time till moisture disappears from it. Junctions with skirting / dado or wall surfaces shall be rounded off using cement mortar 1:2 curing shall be carried out for a minimum of 7 days.

13.0 PLASTERING

13.1 Sand for plastering shall be 50% fine sand and 50% coarse sand from approved sources.

13.2 Preparation of surface shall be done as per CPWD specifications.

13.3 Cement mortar shall be of the mix as indicated in the items and shall be mixed as specified in the CPWD specifications.

13.4 Joints in walls etc. shall be raked to a depth of 12 mm, brushed clean with wire brushes dusted and thoroughly washed before starting the plaster work.

13.5 The surface shall be thoroughly washed with water cleaned and kept wet to saturation point before plastering is commenced.

13.6 Cement mortar as indicated, shall be firmly applied to the masonry walls in a uniform layer to the thickness specified and will be pressed into the joints. On concrete surfaces rendering shall be dashed to the roughened surface to ensure adequate bond. The surface shall be finished even and smooth. Hectoring wherever required shall be done as per directions of **Engineer-in-Charge.** Nothing extra shall be paid on this account.

13.7 All plaster work shall be cured for at least 7 days.

13.8 Integral water proofing compound shall be mixed with cement in the proportion recommended by the manufacturer. Care shall be taken to ensure that the water proofing material gets well and integrally mixed with cement. All other operations are the same as for general plaster work.

13.9 For sand face plaster undercoat of cement plaster 1:4 (1 cement : 4 sand) of thickness not less than 12 mm shall be applied similar to one coat plaster work. Before the under coat hardens the surface shall be scared to provide for the top coat. The top coat also of cement mortar 1:4 shall be applied to a

thickness not less than 8 mm and brought to an even surface with a wooden float. The surface shall then be tapped gently with a wooden float lined with cork to retain a coarse surface texture, care being taken that the tapping is even and uniform.

14.0 Exterior Painting or Apex

14.1 Exterior painting shall be Apex.

14.2 Where shown on drawings for external surfaces of sand faced plaster, or any other surface, two coats of cement paint shall be applied of tint and shade as approved by the **Engineer-in-Charge**.

14.3 The surfaces shall be prepared as specified for white washing. Before applying cement paint the surface shall be thoroughly wetted to control surface suction. The surface shall be moist but not dripping wet, when the paint is applied. Not less than 24 hours shall be allowed between the two coats. In hot weather the first coat shall be slightly moistened before applying the second coat.

14.4 On external plastered surfaces (one coat primer + minimum 3 coat of paints), sand faced or plain plastered and concrete surfaces, apex weather proof paint shall be vigorously scrubbed on to work the paint into the voids and provide a continuous paint film free from pin holes and other openings.

15.0 GLAZING

15.1 Sheet glass glazing of doors, windows etc. shall be of selected quality glass conforming to IS: 2835. Toughened splinter proof industrial safety glass shall confirm to IS: 2553. No cracked chipped or disfigured glass shall be accepted Glass shall be in one piece for each pan.

15.2 Glazing shall be fixed with timber or steel / aluminium beading as called for. Glass shall be back puttied and fixed with beading for a water tight and rattle free installation. Sizes of timber/ steel / aluminium beading shall be as directed.

16. PROTECTIVE COATING AND LINING SYSTEM

16.1 ACID PROOF TILES:

A. MATERIAL

1) TILES

These tiles shall be made of clays, feldspar, quartz, talc and vitrified at high temperature in ceramic kilns and kept unglazed so as to prevent from slipperiness. Tiles shall not absorb more than 2% of their own dry weight when soaked in water. Compression strength : 700 Kg/cm2 Min. & Flexural strength: 200 Kg/cm2 Min. It shall not lose more than 1.5% of it weight when soaked in acid.

Chemical compositions of tiles:

- Al_2O_3 : 22-24%
- SiO_2 : 60-65%
- Fe_2O_3 : 1.0-2.0%
- Alkalise : 10-12%

2) K-BASED SILICATE MORTAR

Acid Proof cement KSC is a potassium silicate based corrosion cement. Acid tile linings carried out with KSC cement are not subject to crystal formation in the pores of cement. Besides Bitumastic surface is joint-less, hence there is no danger of Acids percolating through the surface.

Characteristics of K-based Silicate mortar:

- Colour : White
- Density (lbs/Cub. ft.) : 130
- Water Absorption : 2-5 %
- Tensile Strength (Psi) : 400
- Compressive strength (Psi) : 2800
- Bond Strength (Psi) : 180
- Coefficient of thermal expansion : 6.0×10^{-6}

3) BITUMASTIC MORTAR

It shall consist of an acid proof inorganic filler and blended bitumen. It shall be trowelled to concrete having total thickness of 10 mm.

Characteristics of Bituminous compounds:

- Density (Kg/m^3) : 2200
- Water content by mass percent (max) : 0.5
- Flash point °C ,min. : 35

Consistency

a) Before setting (test after 1 hr) min. : 100

b) After setting (test after 24 hr) min. : 80

Mastic shall be heated to 150-300°C and shall be applied in 5 mm layers after surface is cleaned and dried.

4) BITUMINOUS PAINT

This is generally of heavy grade bituminous corrosion resisting paint. 2 coats of the paint shall be given, and drying time between the 2 coats shall not be less than 5 hours. Also, its drying time after second coat shall not be more than 8 hours. Its finish shall be smooth, glossy and elastic.

The primer shall confirm to the following requirements:

- Viscosity by standard tar viscometer, 4mm orifice at 25°C: 4 to 24

- Penetration at 25°C, 100g, 5sec in 1/100 cm : 20 to 50
- Water content percent (max) : 0.2

APPLICATION

SL. NO.	DESCRIPTION	ITEM OR AREA
1.	Bituminous Paint (Primer)	Concrete surface
2.	10mm Bitumastic Laying in two layers each shall not be more than 5mm thick	Over Bituminous Paint
3.	One layer, 5mm Acid, K-based Silicate Type mortar	#
4.	10 mm thick Acid proof tiling	Over K-based Silicate

- Tiles should be fixed on bitumastic surface with the help of 5mm K-based silicate mortar.

16.2 EPOXY COATING

A. MATERIAL

1) EPOXY COATING

Characteristics of coated surfaces (after application)

- Compressive strength : min. 90 N/mm2
- Tensile strength : min. 10 N/mm2
- Abrasion resistance : as per Amsler 1.5 mm after 3000 revol.
- Bonding (joining) factor : 1

APPLICATION:

SL. NO	DESCRIPTION	APPLICATION
1.	One coat of two pack interpenetration polymer (Epoxy Phenolic) Thickness 60 micron per coat	Primer coat on Concrete surface

SL. NO	DESCRIPTION	APPLICATION
2.	One coat of two pack interpenetration polymer (Epoxy Phenolic) Thickness 100 micron per coat	Intermediate Coat over Primer Coat
3.	One coat of two pack interpenetration polymer (Polyurethane) Thickness 50 micron per coat	Final Coat over Intermediate Coat
4.	Sealing by polysulphide compound	This will be provided at all joints with foundation, pits & wall etc

16.3 ACID RESISTANT BRICK LINING

A. MATERIAL

These bricks are made of raw materials such as clay or shale of suitable composition with low lime and iron content, feldspar, flint or sand and vitrified at high temperature in ceramic kilns. Bricks shall not absorb more than 2% of their own wt. when soaked in water. Compression strength: > 700 Kg/cm^2. Bricks shall not lose more than 1.5% at their own weight when tested for acid resistance.

Chemical compositions of bricks are

a) Al_2O_3 22-24%

b) SiO_2 60-65%

c) Fe_2O_3 1.0-2.0%

d) Alkalies 10-12%

1) K-BASED SILICATE MORTAR

Acid Proof cement KSC is a potassium silicate based corrosion cement. Acid brick linings carried out with KSC cement are not subject to crystal formation in the pores of cement. Besides Bitumastic surface is joint-less, hence there is no danger of Acids percolating through the surface.

Characteristics of K-based Silicate mortar:

Colour	: White
Density (lbs/Cub. ft.)	: 130
Water Absorption	: 2-5 %
Tensile Strength (Psi)	: 400

Compressive strength (Psi) : 2800

Bond Strength (Psi) : 180

Coefficient of thermal expansion : 6.0×10^{-6}

2) BITUMASTIC MORTAR

It shall consist of an acid proof inorganic filler and blended bitumen. It shall be trowelled to concrete having total thickness of 10 mm.

Characteristics of Bituminous compounds:

Density (Kg/m^3) : 2200

Water content by mass percent (max) : 0.5

Flash point °C ,min. : 35

Consistency

c) Before setting (test after 1 hr) min. : 100

d) After setting (test after 24 hr) min. : 80

Mastic shall be heated to 150-300°C and shall be applied in 5 mm layers after surface is cleaned & dried.

3) BITUMINOUS PAINT(PRIMER)

This is generally of heavy grade bituminous corrosion resisting paint. 2 coats of the paint shall be given, and drying time between the 2 coats shall not be less than 5 hours. Also, its drying time after second coat shall not be more than 8 hours. Its finish shall be smooth, glossy and elastic.

The primer shall confirm to the following requirements:

Viscosity by standard tar viscometer, 4mm orifice at 25°C : 4 to 24

Penetration at 25°C, 100g, 5sec in 1/100 cm : 20 to 50

Water content percent (max) : 0.2

APPLICATION

SL. NO.	DESCRIPTION	ITEM OR AREA
5.	Bituminous Paint (Primer)	Concrete surface
6.	10mm Bitumastic Laying in two layers each shall not be more than 5 mm thick	Over Bituminous Paint

SL. NO.	DESCRIPTION	ITEM OR AREA
7.	One layer, 5mm Acid, K-based Silicate Type mortar	#
8.	One layer, 40mm Acid resistant Brick lining	Over K-based Silicate

#:- K-based Silicate mortar should be buttered on all sides of acid-resistant brick except the side facing the surface to be exposed to corrosives

16.4 Fire proofing by in-situ concrete (Encasing)

Concrete for fire proofing shall be M20 grade. Mixing and placing shall be same as for concrete work

Minimum thickness of concrete coating over the steel shall be 50 mm.

Concrete shall be poured into forms properly oiled and made to correct dimensions. Concrete shall be vibrated as necessary to ensure smooth surface, free from voids and irregularities. Any defects, honey comb etc. shall be rectified by CONTRACTOR at his own cost.

17.0 CULVERT WORK

17.1 Pipe Culverts

17.1.1 Reinforced concrete pipes shall be provided between the drain pits of storm water drains to cross the roads. These pipes shall be non-pressure type conforming to IS: 458 and class as specified in the nomenclature of the item. The pipes shall be laid between the drain pits with a uniform slope and with proper bedding, if required, as per approved drawings. The reinforced concrete pipes shall be manufactured by centrifugal process. All pipes shall be true to shape, perfectly straight, sound and free from cracks. The pipes shall be free from defects resulting from imperfect grading of the aggregate mixing or moulding.

17.1.2 Reinforced concrete pipes shall be laid, jointed and tested as per IS: 783. Pipes shall be laid true to alignment and gradients over cement concrete bed of 1:2:4 mix and / or encased, if required, as per approved drawings or as directed by Engineer-in-Charge. No deviations from the lines, depths of cuttings or gradients shall be permitted without approval in writing by Engineer-in-Charge. The joint between concrete drain pit wall and concrete pipe shall be done properly to make it water-tight. The pipe joints shall be spigot and socket joint (rigid type) for pipes of 600 mm. diameter and below and collar joint (rigid type) for pipes over 600 mm. diameter. For both types of joints, the annular space shall be filled up with cement and sand mortar 1:2 mix which shall be rammed with caulking tools. After the day's work, any extraneous matter shall be removed from inside of the pipes. Joints shall be cured properly as per IS: 783. Reinforced concrete pipes shall be tested hydraulically as per IS: 783. Refilling of trenches shall not be commenced until the entire length of the pipe has been tested and approved. The excavation of earth in trenches for laying the concrete pipes and refilling shall be done as per IS: 783.

17.2 Box Culverts

17.2.1 The box-culverts are to be provided across the roads joining the storm water drains on both sides of the road. These box-culverts shall be of either complete reinforced cement concrete

construction or brick masonry and reinforced cement concrete construction as specified in the schedule of items. The box-culvert construction shall be carried out as per the approved drawings.

TECHNICAL SPECIFICATION

FOR

WATER SUPPLY, DRAINAGE & SANITATION

CONTENTS

SL.NO.	DESCRIPTION
1.0	SCOPE
2.0	GENERAL REQUIREMENTS
3.0	CODES & STANDARDS
4.0	MATERIALS
5.0	MANHOLES

1.0 Scope

1.1 This Specification Covers

The supply, laying and installation of pipes / open surface drains for draining off rain / surface water, fire water, sewage, plant effluent / blow down / floor washings etc., with all fittings and fixtures including jointing.

The supply, laying and installation of pipes for supply of water with all fittings and fixtures including jointing.

The supply and installation of sanitary fixtures like water closets, urinals, wash basins, sinks etc., with all fittings and fixtures.

The supply and installation of toilet accessories like mirrors, shelves, towel rails, liquid soap containers etc., with all fittings and fixtures.

The supply and installation of overhead water tanks with all fittings and fixtures.

The supply and construction of ancillary works like manholes, drop connections, gully chambers, oil traps, soak pits etc., with all fittings and fixtures.

2.0 GENERAL REQUIREMENTS

2.1 The Contractor shall furnish all skilled and unskilled labour, plant, equipments, scaffolding, men, materials, etc., required for complete execution of the work in accordance with the drawings and as described herein and / or as directed by the Engineer.

2.2 The Contractor shall make his own arrangements for locating the coordinates and positions of all works and reduced levels (RL) at these locations based on two reference grid lines and one bench mark which will be furnished by the owner. The Contractor has to provide at site all the required survey instruments etc., to the satisfaction of the Engineer so that the work can be carried out accurately according to the specification and drawing.

2.3 The Contractor shall make good to the satisfaction of the Engineer all cuttings / damages resulting from his operations during the installation.

2.4 Only tentative Plant layout shall be furnished by the Owner. Detailed working drawings showing the layout, installation and other details will be prepared by the Contractor and got approved from the Engineer.

2.5 The Contractor shall dispose of all unserviceable materials at least 50 m away from the plant boundary, unless otherwise directed by the Engineer. All serviceable material shall be stacked within a lead of 500 m as directed by the Engineer.

2.5 In case of any contradiction between the provisions stipulated in this module of technical specification and those of other modules like Excavation and Filling, Cast-in-situ Concrete and Allied works etc., the former shall govern.

All works shall be carried out by qualified / licensed plumbers.

3.0 CODES AND STANDARDS

3.1 All standards, specifications, acts, and Codes of practice referred to herein shall be the latest edition including all applicable official amendments and revisions.

3.2 In case of conflict between this specification and those (IS Standards, codes etc.)

Referred to herein (in para 3.3) the former shall prevail.

3.3 Some of the relevant Indian Standards, Acts and Codes referred to herein are given below:

IS	:	458	:	Precast concrete pipes.
IS	:	554	:	Dimensions for pipe threads, where pressure tight joints are made on threads.
IS	:	651	:	Salt glazed stoneware pipes and fittings.
IS	:	771 (Part-1 to 7)	:	Glazed fire clay sanitary appliances.
IS	:	774	:	Flushing cisterns for water closets and urinals.
IS	:	775	:	Cast iron brackets and supports for wash basins and sinks.
IS	:	778	:	Copper alloy gate, globe and check valves for water works purposes.
IS	:	781	:	Cast copper alloy screw down bib taps and stop valves for water services.
IS	:	782	:	Caulking lead.

IS	:	783	:	Code of practice for laying of concrete pipes.
IS	:	805	:	Code of practice for use of steel in gravity water tanks.
IS	:	1172	:	Code of basic requirements for water supply, drainage and sanitation.
IS	:	1239	:	Mild steel tubes, tubular and other wrought steel fittings.
IS	:	1536	:	Centrifugally cast (Spun) iron pressure pipes for water, gas and sewage.
IS	:	1703	:	Copper alloy float valves.
IS	:	1726	:	Cast iron manhole covers and frames.
IS	:	1729	:	Sand cast iron spigot and socket, soil waste and ventilating pipes, fittings and accessories.
IS	:	1742	:	Code of practice for building drainage.
IS	:	1795	:	Pillar taps for water supply purposes.
IS	:	2065	:	Code of practice for water supply in buildings.
IS	:	2326	:	Automatic flushing cisterns for urinals.
IS	:	2501	:	Solid drawn copper tubes for general engineering purposes.
IS	:	2548	:	Plastic seats and covers for water closets.
IS	:	2692	:	Ferrules for water services.
IS	:	2963	:	Copper alloy waste fittings for wash basins and sinks.
IS	:	3311	:	Waste plug and its accessories for sinks and wash basins.
IS	:	3438	:	Silvered glass mirrors for general purposes.
IS	:	3486	:	Cast iron spigot and socket drain pipes.
IS	:	3989	:	Centrifugally cast (spun) iron spigot and socket soil, waste and ventilating pipes, fittings and accessories.
IS	:	4111 (Part- 1 to 5)	:	Code of practice for ancillary structure in sewerage system.
IS	:	4127	:	Code of practice for laying of glazed stone-ware pipes.
IS	:	4764	:	Tolerance limits for sewage effluent discharged into inland-surface waters.
IS	:	4827	:	Electro plated coatings of nickel and chromium on copper and copper alloys.
IS	:	5219	:	Cast copper alloys traps.
IS	:	5329	:	Code of practice for sanitary pipe work above ground for buildings.

IS	:	5382	:	Rubber sealing rings for gas mains, water mains and sewers.
IS	:	5822	:	Code of practice for laying of welded steel pipes for water supply.
IS	:	6163	:	Centrifugally cast (spun) iron low pressure pipes for water, gas and sewage.
IS	:	7231	:	Plastic flushing cisterns for water closets and urinals.
IS	:	7740	:	Code of practice for construction and maintenance of road gullies.
IS	:	8931	:	Copper alloy fancy single taps combination tap assembly and stop valves for water services.
IS	:	8934	:	Cast copper alloy fancy pillar taps for water services.
IS	:	9762	:	Polyethylene floats for float valves.
IS	:	10446	:	Glossary of terms for water supply and sanitation.
IS	:	10592	:	Industrial emergency showers, eye and face fountains and combination units.
IS	:	12592	:	Specification for precast concrete manhole covers and frames.
SP	:	35	:	Hand book on water supply and drainage.

4.0 MATERIAL

4.1 All pipes, fittings, fixtures, appliances and accessories shall conform to the relevant Indian Standards as listed under Clause No. 3.0. These shall be obtained from an approved reputed manufacturer, and shall be approved, the Engineer. Wherever indicated by the Engineer, the Contractor shall submit samples of materials. These may be retained by him for subsequent comparison when bulk supplies are received at site. Ultimate choice of type lies completely with the Engineer.

4.2 The material brought to the site shall be stored in a separate secured enclosure, away from the building materials. Pipe threads, sockets and similar items shall be specially protected till final installation. Brass and other expensive items shall be kept under lock and key. Fragile items shall be checked thoroughly when received at the site and item found damaged shall not be retained at site.

4.3 Chromium plating fittings and appliances shall be of grade-2. (10 micron thickness), conforming to IS: 4827.

4.4 Pipes

Unless otherwise specified, following types of pipes shall be used:

For water supply to buildings, fittings CPVC pipes conforming to IS 15778 shall be used.

For inlet connecting pipes to appliances / fittings, C.P. brass pipe of 15 mm N.B. with union of approved make shall be used. Standard length of 300 mm to 450 mm pipe shall be used to suit the site requirements.

For building sanitary work above ground, sand cast iron / centrifugally (spun) cast iron/PVC pipes, fittings and accessories conforming to IS: 1729 and IS: 3989 respectively shall be used. Pipes shall be coated with coal-tar by hot dipping process for both inner and outer surfaces.

Glazed stoneware pipes used for sewer and drain shall conform to Grade A of IS: 651.

RCC pipe used for sewer and drain shall conform to IS : 458. Class NP2 pipe shall generally be used. However, for road or railway crossing higher class of pipe or concrete encashment shall be provided to take care of higher load.

For drain and sewer line work in bad or unstable ground condition and under building, centrifugally cast (Spun) iron pressure pipes conforming to IS: 1536 shall be used. Class LA pipe with spigot and socket ends shall be used. Pipes shall be coated with coal tar.

PVC rain water pipe shall be used for roof drainage.

4.5 Above Ground Level

1) Galvanised mild steel pipes for water supply

For work above ground level, the galvanised mild steel pipes and fittings shall run on the surface of the walls, ceiling or in chase as specified or shown on the drawing. The fixing shall be done by means of standard pattern holder bat clamps, provided at no more than 90 cm and keeping the pipes about 1.5 cm clear of the wall. To conceal the pipes, chasing may be adopted or pipes fixed in the ducts or recess etc. Provided there is sufficient space to work on the pipes with the common tools. The pipes shall not ordinarily be buried in walls or solid floors. Under unavoidable situations, pipes may be buried for short stretch after providing adequate protection against damage. Union joints shall be provided for all required locations to facilitate maintenance.

Where directed by the Engineer, a M.S. tube sleeve shall be fixed at a place the pipe is passing through. In case the pipe is embedded, it should be painted with anti-corrosive bitumastic paints conforming to IS: 158. The pipes shall be oiled and rubbed over the white lead and a few turns of spun yarn wrapped round the screwed end of the pipe. The end shall then be screwed in the socket, tee etc., with the pipe wrench. All pipes and fittings shall be properly jointed and made complete water tight. Burr from the joint shall be removed after screwing.

The pipes and fittings shall be checked under working pressure. Any joint found leaking, shall be rectified and all leaking pipes removed and replaced. The pipes and fittings shall be tested to a hydraulic pressure of 6 kg/sq.cm. All pipes used for water supply should be thoroughly and efficiently disinfected before being taken into use. The method of disinfection shall be subject to the approval of the Engineer.

The storage tanks and downtake distribution pipes shall be disinfected together as specified under clause no. 13.2 of IS: 2065-1983, using disinfecting chemical.

2) UPVC pipe above ground for Buildings Sanitary work

For sanitary pipe work above ground for Buildings, 18:5329 shall be followed for general guidance. Proper ventilation shall be provided in the piping system. The single stack system shall not generally be provided.

Plain pipes shall be secured to the walls at all joints with M.S. holder bat clamps. The clamp shall be made from 1.6 mm thick M.S. sheet of 30 mm width, bent to the required shape and size so as to fit tightly on the socket of the pipe, when tightened with screw bolts. It shall be formed out of two semicircular pieces, hinged with 6 mm dia M.S. pin on one side and provided with flanged ends on the other side with holes to fit in the screw holt and nut, 40 mm long. The clamp shall be provided with a hook made out of 27.5 cm long, 10mm diameter M.S. bar, riveted to the ring at the centre of one semicircular piece. C.I. brackets can also be used. The clamps shall be fixed to the wall by embedding their hooks in cement concrete block 10 x 10 x 10 cm (1:2:4 mix) for which necessary holes shall be made in the wall at proper places. The clamps shall be kept about 25 mm clear of finished face of wall.

All soil pipes shall be carried up above the roof and shall have sand PVC terminal guard. The pipes above parapet shall be secured to the wall by means of M.S. stay and clamps.

The pipes shall be fixed perfectly vertical or to the lines as directed. The spigot of the upper pipes shall be properly fitted in the socket of the lower pipe such that here is a uniform annular space for filling with the jointing material. The interior of the socket and exterior of the spigots shall be thoroughly cleaned and dried. The spigot end shall be inserted into the socket right up to the back of the socket and carefully jointed using solvent as per recommendation of manufacturer.

Floor trap shall be 'Nahni' or ordinary type and shall conform to IS:1729. The floor shall be suitably lowered to accommodate the trap and the top of the floor shall be properly sloped towards the trap for effective drainage. A chromium plated/galvanised grating shall be provided on the trap. The sunken floor slab shall be filled with light weight materials like cinder mixed with cement. Sunken slab shall be made watertight by means of Sika water proofing compound as recommended by the manufacturer.

Rain Water Downcomers

Rain water downcomers and fittings shall be standard PVC rainwater downcomers shall run along and be secured to walls, columns etc. Where desired by the Engineer, these may have to be installed in chases cut out in the structure. All pipes shall be well secured to the walls and supported by adequately strong brackets. The brackets may be wrought iron clevis type, slip-ring type or perforated strap iron type, as approved by the Engineer. Suitable spacer blocks shall be provided against the vertical surface on which the pipe is fixed.

All bends and junctions shall be supplied with water tight cleaning eyes. For improving the aesthetic appearance of the portion of building carrying rain water downcomers, the pipes may have to be concealed by encasing them with brick masonry, concrete, etc.

Galvanised M.S. pipes shall be jointed by using standard sockets or by welding. For welding of pipes, IS:11906 shall be followed. After welding, the welded area shall be coated with zinc rich paint after proper cleaning and preparation of the surface. Joints between successive lengths of pipe can be by collars according to provision of IS:1742-1983. All rainwater downcomers shall be provided with roof drain head of the shape and type as shown on the drawing. Unless otherwise specified, dome type drain head shall be used.

3) Khurras

The khurras shall be constructed before the brick masonry work in parapet wall is taken up, and it shall be 45x45cm in size, unless otherwise specified and be formed of cement concrete 1 :2:4 (1 cement: 2 sand: 4 graded stone aggregate of 20 mm nominal size).

A PVC sheet 1 mx1 mx400 micron shall be laid under khurras and then cement concrete shall be laid over it to a minimum thickness of 3cm with its top surface lower than the level of adjoining roof surface by not less than 50mm.

The concrete shall be laid to a size greater than the stipulated size of khurra in such a way that the adjoining terracing of brick tile overlaps the concrete on its 3 edges by not less than 7.5 cm. The concrete shall slope uniformly from the edges to the rainwater outlet. The concrete shall be continued at the same slope through the width of the wall into outlet opening to ensure a water tight joint.

The khurras and the sides of outlet shall then be rendered with 12 mm coat of cement plaster 1:3 (1 cement: 3 sand). This shall be done when the concrete is still green and shall be finished with a floating coat of neat cement. The sides of khurras and the sides of openings shall be well rounded. The size of finished outlet opening shall be 10cm wide by 20cm high or as directed by the Engineer.

Iron grating shall be provided at the outlet to prevent chocking. The grating shall be 20×25cm with an outer frame of 15mm x 3mm MS flat, to which 4 nos. - 10mm dia MS bars shall be welded in vertical direction, keeping an equal clear spacing of 2.5cm.

4) Rainwater Spout

No spout shall be less than 80 mm in diameter. The spacing of spouts shall be arranged to suit the position of openings in the wall.

The spouts shall be of PVC, 60 cm long. These shall be perfectly sound, free from cracks, imperfections of glazing etc. These must be straight, cylindrical and of Standard nominal diameter, length and depth of socket. Full length of pipes shall be used on the work. These must be salt glazed and shall generally conform to IS: 651.

These shall be provided at the mouths of khurras and shall be fixed in cement mortar 1: 4 (1 cement: 4 sand) with the socket embedded in the masonry and the spigot end projecting outside. The masonry around the pipe and socket shall be thoroughly wetted and the hole shall be given a coat of cement mortar around. The pipe shall then be inserted and fixed with a surround of mortar. In case the hole is made much larger than the size of the pipe. Cement concrete 1: 2: 4l (1 cement: .2 sand: 4 graded. stone aggregate of 12.5 mm nominal size) shall be used to fill in the annular space. The spouts shall slope downward at a slope of 1 in 6. The projection outside the wall shall be uniform and not less than 40 cm. The

entrance with the pipe shall be smoothly rounded to meet the internal bore of the pipe to facilitate easy flow. Care shall be taken to ensure that the vertical plane through the centre line of the spouts in a row shall be true to line.

4.6 Below Ground Level:

1) Trenches and other Excavation:

Except as mentioned hereunder, all work for earthwork shall be done as specified in relevant chapter of Excavation and Filling. The trenches shall be so dug that the pipe may be laid to the required alignment and at required depth. The cover shall be measured from top soil or other surface of the ground. Turf, top soil or other surface material shall be set aside, turf being carefully removed and stacked for use in reinstatement. The bed of the trench, if in soft or made up earth, shall be well watered and rammed before laying the pipes and the depressions, if any, shall be properly filled with earth and consolidated in 20 cm layers.

If the trench is extremely hard or rocky or loose stony soil, the trench shall be excavated at least 150 mm below the trench grade. Rocks, stone or other hard substances from the bottom of the trench shall be removed and the trench brought back to the required grade by filling with selected earth and compacted so as to provide smooth bedding for the pipe.

The last 7.5 cm. of excavation shall be trimmed and removed as separate operation immediately prior to the laying of the pipe on their foundations. The width of the trench shall be such as to provide not less than 20 cm clearance on either side of the pipe. Excavation in road shall be so arranged as to cause minimum obstruction to traffic.

2) Laying of Pipes:

In no case, pipes shall be rolled and dropped into the trench. After lowering, the pipes shall be arranged so that the spigot of one pipe is carefully centered into the socket of the next pipe and pushed to the distance that it can go.

The pipe shall be laid with socket facing the direction of flow of water. The connection to an existing sewer shall as far as possible be done at the manhole.

3) Filling of Trench

Filling of the trench shall not be commenced until the length of pipes therein has been tested and passed. Special care shall be taken to pack under and sides of the pipes thoroughly with selected material. At least 300 mm over the pipe shall also be filled with selected earth.

5.0 MANHOLES

5.1 Wherever applicable manhole should be suitably designed & constructed.

QUALITY ASSURANCE PLAN

Sl No.	Material/ Operation	Name Of Test	Field/ Lab.	Test Procedure	Frequency Of Checking	Extent Of Checking	Reference Document
1.	**Earthwork in excavation**	Lines, levels & depth	Field	Measurement	As per decision of site engr.	100%	Specn.& approved drg.
2.	**Concrete work** a) Course aggregate	i) % of soft or deleterious materials	Lab.	As per IS 2386 Part IX,1963	Once for each source & shall be repeated in case source is changed	-do-	Specn.&IS 2386 (Pt.IX) & IS-383
		ii) Particle size distribution	Lab/ Field	As per IS 2386 (Pt.I)	-do-	-do-	IS 383, Specn.
	b) Fine aggregate	i) Silt content	Lab	Appendix -D of CPWD	-do-	-do-	CPWD Specn.

		ii)Particle size distribution	Lab./ Field	Specn.Vol.I IS 383	-do-	-do-	Specn. & IS 383
	c) Cement	i) Physical properties	Lab	As per IS 269 & 4031	-do-	-do-	IS 269,1489,4031 & test certificate
		ii) Chemical properties	-do-	As per IS 4032	-do-	-do-	IS 4032 & test certificate
	d) Reinforcing bars						

	i) Deformed bars	Physical properties & dimensions	Field /Lab	As per IS 1139	-do-	-do-	IS 1139& test certificate
	ii) Cold twisted bars	-do-	-do-	As per IS 1786	-do-	-do-	IS 1786& test certificate
	iii) Hard Drawn Steel Wire Fabric	-do-	-do-	As per IS 1566	-do-	-do-	IS 1566& test certificate
	iv) TMT bars	-do-	-do-	As per IS 1786	-do-	-do-	IS 1786& test certificate
	v) Placement, laps, hooks, spacers etc.	Physical	Field	As per IS 456	ALL	-do-	IS 456 & approved drawings
	e) Water	Chemical test	-do-	As per IS 3025-64	Single Test	-do-	IS 3025-1964

	f) Tests for concrete	i) Slump test	Field	As per IS 1199	For each batch of concreting	-do-	CPWD Specn. & IS 1199
		ii) Cube test at 7/28 days	Field/ Lab.	As per IS 516	No. of cubes to be decided as per given in IS 456/ Specn.	-do-	IS 456,IS 516
	g) Shuttering /Formwork Checking of levels, dimensions, unevenness, joints, cleanliness, oiling etc.	Physical	Field	Measurement	All	-do-	As per drawing, CPWD specifications & instruction of E.I.C
3.	**Brick Work/Hollow Concrete Block work**						

	a) Brick/ Hollow Concrete Block work	Physical properties & crushing strength	Field/ Lab.	As specified in Specn & IS 1077	Once for each source	100%	Specn. / IS 1077
	b) Mortar	Uniformity in mix	Field	As specified in IS 2250	As & when required	-do-	IS 2250
4.	**Steel works using tubulars, angles, plates, channels etc.**						
	i) Structural steel & plates	Dimension, manufacturers, Specn. test certilficates	Lab.	IS:226 & 2062	Once for each source	100%	IS Codes & test certificates
	ii) Welding electrodes	-do-	-do-	IS:814 & 815	-do-	-do-	-do-

	iii) Welding	Quality of weld, weld reinforcement, contour etc.	Field	Visual	As per discretion of site engr.	-do-	IS: 823
	iv) Painting on steel works (synthetic enamel paint over 3 coats red oxide coat zinc primer)	Cleaning off rust dirt, grease etc. of coats.	-do-	IS:123 1962	-do-	-do-	IS Code, Relevant Specn.
5.	**Providing & laying water proofing on roof**	Thickness, slope etc.	-do-	As per Specn. & IS 2115	-do-	-do-	-do-
6.	**Flooring**						
	i) Cement	Physical	Field	As per IS 1443	All	-do-	IS 1443

	concrete floor						
	i) Glazed tiles	Physical	Field	As per IS 13630	All	-do-	IS 13630 & Manufacturer's certificate
7.	**Pre-coated G.I sheet roofing laying & fixing.**	Physical	-do-	As per IS 277 & 513	Once for each source	-do-	IS code, spec. & Manufacturer's certificate
8.	**Gypsum board false ceiling/ Prima board Armstrong false ceiling**	Physical	-do-	IS 2095 & 2542	All	-do-	IS code, specn. & Manufacturer's certificate
9.	**Doors/windows /ventilators**						
	i) Glazing	Physical	-do-	IS 1081 & 2835	All	-do-	IS code, specn. & Manufacturer's certificate
	ii) Flush door shutters	Physical	-do-	IS 2095 & 2542	All	-do-	IS code, specn. & Manufacturer's certificate

	iii) Aluminium	Physical	-do-	IS 1948 & 1949	All	-do-	IS code, specn. & Manufacturer's certificate
	iv) Steel	Physical	-do-	IS 1038	All	-do-	IS code, specn. & Manufacturer's certificate
10.	**Plastering**	Physical	-do-	As per specn.	All	-do-	Specn.
11.	**White washing, snowmen, distemper**	Physical	-do-	IS 712, 428 & 5410	All	-do-	IS code & specn.
12.	**Toiletries & sanitary fixtures**						
	IWC, EWC, Urinals, washbasins, G.I pipes & fittings, C.I pipes & stoneware pipes etc.	Physical	-do-	IS 771, 775, 774, 1239, 2065, 781, 1729, 1726,,651,4127 etc.	All	-do-	IS code, specn. & Manufacturer's certificate

Note: Parameters/guidelines fixed for the quality control in accordance with the contract document, IS Codes/Technical Specification etc. are just the synopsis of the whole constructional activities in a bid to visualise the total involvement at a glance. Mere compliance of the QAP does not relieve the contractor from overall responsibility to render best quality of work in conformity with all the relevant documents and the best engineering practices. In order to minimise the size of QAP, only salient/important features have been taken into account and other small/minor involvement will be dealt with individually as per the provision of contract.

SOIL EXPLORATION REPORT

For

M/S, TERRA FIRMA CONSULTANCY SERVICES, CHENNAI.

Ref: GEO- CH-029-2016

PROJECT NAME:

SOIL INVESTIGATION FOR THE PROPOSED CONSTRUCTION OF COMMON EFFLUENT TREATMENT PLANT @ SIDCO PHARMACEUTICAL COMPLEX, ALATHUR-603110.

GEO DESIGN

(An ISO 9001 : 2008 Certified Company)

Soil Investigations, SPT Test, DTH, Diamond core drilling, & Grouting works

No – 15 , Periyar Pathai, Chennai – 94.

Ph. 044 43326264 Mobile : 90433 - 44088

E - mail: geodesignchennai@gmail.com , Web : www.geodesign.co.in

S.NO	CONTENTS	PAGE NO
1.	INTRODUCTION	3
	1.1.Purpose and Scope	3
	1.2.The Site	3
2.	FIELD INVESTIGATIONS	3
	2.1Rotary Boring	3
	2.2Standard Penetration Test	3
	2.3Sampling	4
3.	LABORATORY TEST	4
4.	FOUNDATION ANALYSIS	5
	4.1 Soil Profile	5
	4.2 Safe Bearing Capacity	5
5.	RECOMMENDATION	6
6.	REFERENCES	7
7.	ANNEXURE	
	7.1 LOG OF BORINGS	08 - 10
	7.2 LABORATORY TEST RESULTS	11 - 13

1. INTRODUCTION

1.1. PURPOSE AND SCOPE

Geo-technical site investigation work for. "SOIL INVESTIGATION FOR THE PROPOSED CONSTRUCTION OF COMMON EFFLUENT TREATMENT PLANT @ SIDCO PHARMACEUTICAL COMPLEX, ALATHUR-603110." The primary purpose of our investigation is to obtain data to develop foundation design recommendations for the above work. At, first instance, Three boreholes was bored at site. Client's representatives selected the locations of borings. To accomplish these purposes, the following tasks were performed:

1. Detailed soil borings were done up to stratum to explore the sub surface stratigraphy and obtain soil samples for testing. Field and laboratory tests were conducted to evaluate the index and engineering properties of the soils
2. Engineering analysis were performed to develop foundation design information for proposed structure

1.2. THE SITE :

"SOIL INVESTIGATION FOR THE PROPOSED CONSTRUCTION OF COMMON EFFLUENT TREATMENT PLANT @ SIDCO PHARMACEUTICAL COMPLEX, ALATHUR-603110."

2. FIELD INVESTIGATIONS

2.1. ROTARY BORING

Rotary drilling technique was adapted using Calyx machine in this field. In this method, boring is effected by the cutting action of a rotating bit that is kept in firm contact with the bottom of the hole. The bit is attached to the lower end of a hollow drill rod that is rotated by a suitable chuck. Drilling mud (usually Bentonite) is continuously forced down the hollow drill rods. The mud returning upwards though the annular space between the drill rods and the side of the hold bring the cutting to the surface.

2.2. STANDARD PENETRATION TEST

It is now most commonly used in site test. The test measures the penetration resistance of the split spoon sampler, when it is driven into the soil, at the bottom of a borehole in a standard manner. The N-value, which is the number of blow required to achieve 300mm penetration of the soil, indicates the relative density of sand or gravel, the consistency of other soil such as silts or clays and the strength of weak rocks. The test is described in IS 2131 - 1981. The split spoon sampler is attached to stiff drill rod and lowered to the bottom of the bore hold. A standard blow consists of dropping a mass of 63.5kg free fall through 750 mm on to an anvil at the top of the rods and ensuing that this amount of dynamic energy is transferred to the sampler as much as possible.

The number of blows required to achieve each 150mm penetration is recorded for a fall penetration of 450mm. The initial 150mm penetration is referred to as seating drive and the blows required for this penetration are not considered as this zone is in disturbed soil. The next 300mm of penetration is referred to as the test drive and the number of blows required to achieve this fully is termed the penetration resistance or N-value.

2.3. SAMPLING

Soil samples were collected through Split spoon and rock core sample were collected through single tube core barrel.

3.LABORATARY TESTS

The operations to be performed in the laboratory depend upon the type of the nature of data required for the problem at hand. In case of cohesionless material, like sand, the laboratory tests are usually minimum and the design parameters are worked out from field test data such as form SPT- N value, Core resistance and plate load test data.

In the case of cohesive soils, the programme of laboratory testing can vary from carrying out simple tests such as unconfined tests to comprehensive study of soil behaviour using triaxial shear tests and consolidation tests.

Following laboratory tests are conducted.

For Cohesion & cohesionless soil

a) Specific gravity

b) Sieve analysis

c) Atterberg's limits

d) Natural moisture content

4. FOUNDATION ANALYSIS

4.1 Soil Profile

The profile of the area as observed in the bore hole is given in the chart. The water level is observed far below. The soil layer up to 6.00m depth is WEATHERED ROCK was obtained

4.2 Safe Bearing Capacity

The bearing capacity of granular soil depends upon the unit weight and angle of internal friction of the soil. These two properties of granular soils are determined by standard penetration tests.

The allowable bearing pressure based on tolerable settlement has been established empirically by Terzaghi and Peck, 1948 and may be expressed by the equation.

Safe bearing capacity (SBC) = $3.5\ (N-3)\ \{(B+0.3)/2B\}^2 \times R_W \times F_D + P$

Where

N = Collected N value N2
B = Width of Foundation = constant 1
RW = Water Correction = constant 0.5
FD = Depth of Factor = constant 1
P = Over Burden Pressure

5 . RECOMMENDATION

- The site of "SOIL INVESTIGATION FOR THE PROPOSED CONSTRUCTION OF COMMON EFFLUENT TREATMENT PLANT @ SIDCO PHARMACEUTICAL COMPLEX, ALATHUR-603110." The bore hole investigation was conduct and SBC was determined.
- The site up to 6.00 m WEATHERED ROCK is obtained.
- **ISOLATED FOOTING** is Recommended for this site.
- Rest the Foundation at 3.00m from the Natural Ground Level.
- The SBC at 3.00m is 36.83 T/m2.
- The detailed SBC at every 1.50m is mentioned in page no -11, 12 & 13.

Er.K.P.VETRISELVAN.ME(GEOTECH),MIGS,MISTE.,
GEOTECHNICAL ENGINEER

6. REFERENCES

1. IS :6403-1981

2. IS :2131-1980

3. IS :1892-1979

4. IS :8009 (Part-1) 1976

5. Wayne CTEng(1992)Foundation design,13th reprint,
Prentice - Hall of India Pvt.Ltd.,

6. Bowles J.E,(1982) Foundation Analysis and design ,3rd edition, Mc Graw Hill International Book Co.

7. Tomlinson M.J. (1995) Foundation Design and Construction, 6th edition, Longman Group.

1

Bore Log

Ref: GEO/ CH/ 029/ 2016

Name of Project: SOIL INVESTIGATION FOR THE PROPOSED CONSTRUCTION OF COMMON EFFLUENT TREATMENT PLANT @ SIDCO PHARMACEUTICAL COMPLEX, ALATHUR-603110.

Soil Investigation done by: GEO DESIGN Soil Exploration Contractor, Chennai-94

Type of Drilling: Rotary – Mud Circulation

G.W.T- 1.00m

Bed Level :

Chainage :

Bore hole No: 1

Location/R.L:

Date of commencement : 26.02.2016

Date of completion : 26.02.2016

Depth below G.L.(R.L)	Soil Profile	Description of Soil	Thickness of layer (m)	Standard penetration test data						Graphical representation of penetration resistance
				Depth at which test is conducted	N – Value- Depth of penetration				Relative density / Consistency	0 20 40 60 30 10
					15cm	30cm	45cm	For 30cm		
2.30m		**Clayey Sand**	**2.30**	1.50	6	10	15	25	Medium	
4.10m		**Poorly Graded Gravel**	**1.80**	3.00	27	>50	-	>50	V.Dense	
		Weathered rock	**1.90**	4.50	>50	-	-	>50	V.Dense	
6.00m		End of Bore hole		6.00	>50	-	-	>50	V.Dense	

Cont….2

2

Bore Log

Ref: GEO/ CH/ 029/ 2016

Name of Project: SOIL INVESTIGATION FOR THE PROPOSED CONSTRUCTION OF COMMON EFFLUENT TREATMENT PLANT @ SIDCO PHARMACEUTICAL COMPLEX, ALATHUR-603110.

Soil Investigation done by: GEO DESIGN Soil Exploration Contractor, Chennai-94

Type of Drilling: Rotary – Mud Circulation

G.W.T- 0.70m

Bed Level :

Chainage :

Bore hole No: 2

Location/R.L:

Date of commencement : 26.02.2016

Date of completion : 27.02.2016

Depth below G.L.(R.L)	Soil Profile	Description of Soil	Thickness of layer (m)	Standard penetration test data						Graphical representation of penetration resistance
				Depth at which test is conducted	N – Value- Depth of penetration				Relative density / Consistency	0 20 40 60 30 10
					15cm	30cm	45cm	For 30cm		
		Clayey Sand	**2.20**	1.50	3	8	13	21	Medium	
2.20m										
		Poorly Graded Gravel	**1.60**	3.00	30	>50	-	>50	V.Dense	
3.80m										
		Weathered rock	**1.70**	4.50	>50	-	-	>50	V.Dense	
				5.50	>50	-	-	>50	V.Dense	
5.50m		End of Bore hole								

Cont….3

3

Bore Log

Ref: GEO/ CH/ 029/ 2016

Name of Project: SOIL INVESTIGATION FOR THE PROPOSED CONSTRUCTION OF COMMON EFFLUENT TREATMENT PLANT @ SIDCO PHARMACEUTICAL COMPLEX, ALATHUR-603110.

Soil Investigation done by: GEO DESIGN Soil Exploration Contractor, Chennai-94

Type of Drilling: Rotary – Mud Circulation

G.W.T- 0.70m

Bed Level :

Chainage :

Bore hole No: 3

Location/R.L:

Date of commencement : 27.02.2016

Date of completion : 27.02.2016

Depth below G.L.(R.L)	Soil Profile	Description of Soil	Thickness of layer (m)	Standard penetration test data						Graphical representation of penetration resistance
				Depth at which test is conducted	N – Value- Depth of penetration 15cm	30cm	45cm	For 30cm	Relative density / Consistency	0 20 40 60 30 10
2.10m		**Clayey Sand**	**2.10**	1.50	9	10	10	20	Medium	
4.40m		**Poorly Graded Gravel**	**2.30**	3.00	10	20	33	53	V.Dense	
		Weathered rock	**1.60**	4.50	>50	-	-	>50	V.Dense	
6.00m		End of Bore hole		6.00	>50	-	-	>50	V.Dense	

Geotechnical Engineer

1

Ref: GEO/ CH/ 029/ 2015

SOIL TEST RESULTS

Name of Project: SOIL INVESTIGATION FOR THE PROPOSED CONSTRUCTION OF COMMON EFFLUENT TREATMENT PLANT @ SIDCO PHARMACEUTICAL COMPLEX, ALATHUR-603110.

Geo Design Soil Exploration Contractor, Chennai-94	BORE NUMBER -1 CHAINAGE:	REDUCED LEVEL:	GROUND WATER LEVEL: 1.00m	WORK COMMENCEMENT ON 26.02.2016	WORK COMPLETED ON 26.02.2016

OIL PROFILE AND DEPTH IN METRES	DEPTH OF SAMPLING	IS SOIL CLASSIFICATION	NATURAL WET DENSITY Kn/M^3	NATURAL MOISTURE CONTENT %	INDEX TEST			SIEVE ANALYSIS % PASSING IS SIEVE ANALYSIS				SPECIFIC GRAVITY	SHEAR TEST		STANDARD PENETRATION TEST				CONSOLIDATION TEST			
					LIQUID LIMIT %	PLASTIC LIMIT %	PLASTICITY INDEX	% of GRAVEL	% of SAND	% of SILT	% of CLAY		COHESION C Ton / M^2	ANGLE OF INTERNAL FRICTION ^{0}	DEPTH OF TESTING M	OBSERVED N VALUE	CORRECTED N VALUE	SAFE BEARING CAPACITY T/m^2	COMPRESSION INDEX C_C	PRE - CONSOLIDATION PRESSURE KG/CM^2	INITIAL VOIDS RATIO	CO-EFFECT OF CONSOLIDATION CV IN CM^2/SEC
															1.50	25	29.14	20.37				
															3.00	>50	50	36.83				
															4.50	>50	50	37.88				
															6.00	>50	50	38.93				
		SC	16.2	14.3	-	-	-	4	33	16	47	2.67	-	-								
	2.30																					
		GP	14.5	12.4	-	-	-	24	27	11	38	2.66	-	-								
	4.10																					
		WR	-	-	-	-	-	-	-	-	-	-	-	-								
	6.00																					

SC-CLAYEY SAND, GP-POORLY GRADED GRAVEL, WR-WEATHERED ROCK. Shear Test & SBC is based on SPT results.

Cont...2

2

Ref: GEO/ CH/ 029/ 2015

SOIL TEST RESULTS

Name of Project: SOIL INVESTIGATION FOR THE PROPOSED CONSTRUCTION OF COMMON EFFLUENT TREATMENT PLANT @ SIDCO PHARMACEUTICAL COMPLEX, ALATHUR-603110.

Geo Design Soil Exploration Contractor, Chennai-94	BORE NUMBER -2 CHAINAGE:	REDUCED LEVEL:	GROUND WATER LEVEL: 0.70m	WORK COMMENCEMENT ON 26.02.2016	WORK COMPLETED ON 27.02.2016

OIL PROFILE AND DEPTH IN METRES	DEPTH OF SAMPLING	IS SOIL CLASSIFICATION	NATURAL WET DENSITY Kn/M^3	NATURAL MOISTURE CONTENT %	INDEX TEST			SIEVE ANALYSIS % PASSING IS SIEVE ANALYSIS				SPECIFIC GRAVITY	SHEAR TEST		STANDARD PENETRATION TEST				CONSOLIDATION TEST			
					LIQUID LIMIT %	PLASTIC LIMIT %	PLASTICITY INDEX	% of GRAVEL	% of SAND	% of SILT	% of CLAY		COHESION C Ton / M^2	ANGLE OF INTERNAL FRICTION ^{0}	DEPTH OF TESTING M	OBSERVED N VALUE	CORRECTED N VALUE	SAFE BEARING CAPACITY T/m^2	COMPRESSION INDEX C_C	PRE - CONSOLIDATION PRESSURE KG/CM^2	INITIAL VOIDS RATIO	CO-EFFECT OF CONSOLIDATION CV IN CM^2/SEC
															1.50	21	25.68	17.81				
															3.00	>50	50	36.83				
															4.50	>50	50	37.88				
															5.50	>50	50	38.58				
		SC	16.6	14.3	-	-	-	8	38	17	37	2.68	-	-								
	2.20																					
		GP	14.8	12.4	-	-	-	29	24	15	32	2.66	-	-								
	3.80																					
		WR	-	-	-	-	-	-	-	-	-	-	-	-								
	5.50																					

SC-CLAYEY SAND, GP-POORLY GRADED GRAVEL, WR-WEATHERED ROCK. Shear Test & SBC is based on SPT results.

Cont...3

3

Ref: GEO/ CH/ 029/ 2015

SOIL TEST RESULTS

Name of Project: SOIL INVESTIGATION FOR THE PROPOSED CONSTRUCTION OF COMMON EFFLUENT TREATMENT PLANT @ SIDCO PHARMACEUTICAL COMPLEX, ALATHUR-603110.

Geo Design Soil Exploration Contractor, Chennai-94	BORE NUMBER -3 CHAINAGE:	REDUCED LEVEL:	GROUND WATER LEVEL: 0.70m	WORK COMMENCEMENT ON 27.02.2016	WORK COMPLETED ON 27.02.2016

OIL PROFILE AND DEPTH IN METRES	DEPTH OF SAMPLING	IS SOIL CLASSIFICATION	NATURAL WET DENSITY Kn/M^3	NATURAL MOISTURE CONTENT %	INDEX TEST			SIEVE ANALYSIS % PASSING IS SIEVE ANALYSIS				SPECIFIC GRAVITY	SHEAR TEST		STANDARD PENETRATION TEST				CONSOLIDATION TEST			
					LIQUID LIMIT %	PLASTIC LIMIT %	PLASTICITY INDEX	% of GRAVEL	% of SAND	% of SILT	% of CLAY		COHESION C Ton / M^2	ANGLE OF INTERNAL FRICTION ^{0}	DEPTH OF TESTING M	OBSERVED N VALUE	CORRECTED N VALUE	SAFE BEARING CAPACITY T/m^2	COMPRESSION INDEX C_C	PRE - CONSOLIDATION PRESSURE KG/CM^2	INITIAL VOIDS RATIO	CO-EFFECT OF CONSOLIDATION CV IN CM^2/SEC
		SC	16.9	14.7	-	-	-	6	35	19	40	2.68	-	-	1.50 3.00 4.50 6.00	20 53 >50 >50	24.81 50 50 50	17.17 36.83 37.88 38.93				
	2.10																					
		GP	15.1	12.9	-	-	-	27	24	21	28	2.67	-	-								
	4.40																					
		WR	-	-	-	-	-	-	-	-	-	-	-	-								
	6.00																					

SC-CLAYEY SAND, GP-POORLY GRADED GRAVEL, WR-WEATHERED ROCK. Shear Test & SBC is based on SPT results.

Geotechnical Engineer

ELECTRICAL SPECIFICATION

FOR

COMMON EFFLUENT TREATMENT SYSTEM

TREATMENT AREA – ELECTRICAL WORKS

The brief details of the electrical works in this Plant is provided herein. This is indicative and is subject to change during detailed engineering. These details are provided only as a guideline to the Bidder to enable him place his Price Bid Offer.

This is to be read in conjunction with the P&I diagram , Design and Sizing Section, Mechanical Equipment Section, Layout, Plant & Machinery Layout, MCC Panel Drawing, Indicative Cable Routing drawing.

This is to be read in conjunction with Annexure # ----- titled "---------" which provides the basic codes and standards for the electrical items in this Plant.

The Electrical Feed to the Plant will be done through a Motor Control Centre located in the Plant & Machinery Area. The incomer is to be taken from the transformer located about 250 mts away from the Plant Area.

The Motor Control Centre will be built for the following feeder Load List Specifications:

Item	tag #	qty	installed HP	Operating HP	Hrs/d	HP/d
pH correction dosing pump	DP 101	1	0.5	0.5	20	10
E Process Feed Pump	P 101 A/B	2	4	2	20	40
E Process Reactor	ER 101 A/B	2	8	4	20	80
alum dosing pump	DP 102	1	0.5	0.5	20	10
Raw sewage transfer pump	P 102 A/B	2	4	2	20	40
aeration tank feed pumps	P 103 A/B	2	4	2	20	40
Aspirating Aerators	ASP 101 A/B	2	10	5	20	100
Secondary Clarifier Mechanism	SC 101	1	1.5	1.5	20	30
return sludge pumps	P 104 A/B	2	4	2	20	40

filter feed pumps	P 105 A/B	2	3	1.5	20	30
filter backwash pumps	P 106 A/B	2	3	3	2	6
hypo dosing pump	DP 103	1	0.5	0.5	20	10
U.F. feed pumps	P 107 A/B	2	3	1.5	20	30
UF alum dosing pump	DP 104	1	0.5	0.5	20	10
U.F. backwash pumps	P 108 A/B	2	6	3	1.5	4.5
U.F. CIP pumps	P 109 A/B	2	2	1	1	1
R.O. Stage 1 feed booster pumps	P 110 A/B	2	3	1.5	20	30
Stage 1 R.O. SMBS dosing pump	DP 105	1	0.5	0.5	20	10

Motor Load List … Contd…

Item	tag #	qty	installed HP	Operating HP	Hrs/d	HP/d
Stage 1 R.O. antiscalant dosing pump	DP 106	1	0.5	0.5	20	10
R.O. Stage 1 high pressure pumps	P 111 A/B	2	15	7.5	20	150
R.O. Stage 2 feed booster pumps	P 112 A/B	2	3	1.5	20	30
Stage 2 R.O. pH booster dosing pump	DP 107	1	0.5	0.5	20	10
R.O. Stage 2 high pressure pumps	P 113 A/B	2	20	10	20	200
R.O. CIP pumps	P 114 A/B	2	4	2	2	4
R.O. permeate dosing pump	DP 108	1	0.5	0.5	20	10
B/wash waste tube settler feed pumps	P 115 A/B	2	2	1	20	20
filter press feed pumps	P 116 A/B	2	6	3	16	48
In plant lighting	LT 101	1	5	5	15	75
Office, stores, a/c & fan points	LT 102	1	5	5	15	75
Hydro pnuematic systems load	HN 101	2	10	5	20	100
Total Connected Load of System	129.5	hp/hr				
Total Operating Load of System	1253.5	hp / day				
	935.1	units/d				

Brief Specifications of the Electrical Works:

Incomer details:

2 incomers.

A. **EbIncomer** : 315 A 4P MCCB With ROM MCCB's shall have microprocessor based MCCB with variable current settings and having microprocessor based O/L, S/C & E/F protection release. Extended rotary operating mechanism with door interlock with defeat feature and padlock facility. MCCB should be with spreader link and phase barriers.

B. **DG Incomer** : 315 A 4P MCCB With ROM MCCB's shall have microprocessor based MCCB with variable current settings and having microprocessor based O/L, S/C & E/F protection release.Extended rotary operating mechanism with door interlock with defeat feature and padlock facility. MCCB should be with spreader link and phase barriers.

Motor Control Centre Basic Details:

Design Basis : TOTAL LOAD OF THE SYSTEM AND DESIGN AS PER CEIG guidelines

Powder coated MCC Panel fabricated out of 14/16-gauge CRCA sheet steel not less than 1.6/2.0mm thick for load bearing members and 1.6mm for doors. inNon compartmentalizedfreestanding floor mounted, dust and vermin proof, with reinforcement of suitable size angle iron, channel, T -iron or flats as required. Cable gland plates shall be provided on top as well as bottom of the panels. Panels shall be treated with all anti-corrosive process before painting as per specification. Panels shall be suitable for 415V, 3-Phase, Four wire, 50 Hz supply complete with earth bus and lifting hooks as required in case of large panels.

The panel framework may be angle iron/channel/bolted type construction. All gasket/rubber part shall be Neoprene flame/Dust/Vermin proof. Panels shall have 7/8 tank pretreatment process comprising of Degreasing, Rinsing, De-rusting, Rinsing, Phosphatissing, Rinsing, passivation & Drying followed by powder coat painting having a paint thickness of 60 microns or as specified.

Indicative Size of the panel : **4.00 mts W x 2.07mts H x 0.35 mts D (refer drawing)**

Outgoing Feeder Specification:

a. 2-7.5HP Dol starter feeders with suitable Mpcb as incommer/over load relay,contactor,AuxContactor,Add On Blocks,start/stop push botton,local/remote selector switch,on/off/trip indication lamps.
b. 10-15HP StarDelta starter feeders with suitable Mpcb as incommer/over load relay,contactor,AuxContactor,Add On Blocks,timer,start/stop push botton,local/remote selector switch,on/off/trip indication lamps

General specifications for cables, glanding and termination for various motors

Cable specifications as per CEIG

WIRING DETAILS:					
SI. No:	DESCRIPTIONS:	CABLE SIZE PVC AL ALM	ISOLATER	TYPE OF STARTER	EARTHING OF CU
1.	UP TO 4.00 HP 4.01 HP TO 7.50 HP	4C X 4 Sq.mm.	16A 32A	DOL	NO 10 CU
2.	7.51HP TO 15.00HP	3C X 6 Sq.mm.	32A	Y/△	NO 8 SWG
3.	15.01HP TO 20.00HP	3C X 10 Sq.mm.	63A	Y/△	NO 8 SWG
4.	20.01HP TO 30.00 HP	3C X 16 Sq.mm.	63A	Y/△	NO 8 SWG
5.	30.01HP TO 40.00 HP	3C X 25 Sq.mm.	125A	Y/△	NO 8 SWG
6.	40.01HP TO 50.00 HP	3C X 35 Sq.mm.	125A	Y/△	NO 8 SWG
7.	50.01HP TO 60.00 HP	3C X 50 Sq.mm.	200A	Y/△	NO 6 SWG
8.	60.01HP TO 75.00 HP	3C X 70 Sq.mm.	250A	Y/△	NO 6 SWG
9.	75.01HP TO 100.00 HP	3C X 95 Sq.mm.	300A	Y/△	NO 4 SWG
10.	100.01HP TO 125.00 HP	3C X 120 Sq.mm.	300A	Y/△	NO 4 SWG
11.	125.01HP TO 150.00 HP	3C X 185 Sq.mm.	400A	Y/△	NO 2 SWG
12.	ALL DB's ARE EARTHING		NO '8' SWG CU or 25 x 3 mm GI		
13.	ALL SB's ARE EARTHING		25 x 3 mm CU or 50 x 6 mm GI		

D.G. SET AS BACKUP:

Design Basis : Operating Load is taken as 100% feed with POWER FACTOR of 0.8

Thus, 150 KVA D.G.Set will provide alternative source of power for 100 UNITS/ HOUR of prime mover power feed requirements

Generator Capacity: 150 KVA

150 KVA 3 phase, 0.415kV radiator type, four stroke, star connected stator, self excited, with DG controller, acoustic enclosure, neutral of DG shall be suitable to locate neutral CT etc. Diesel Generator with DG controller, fuel tank, Acoustic enclosure, antivibration pad, statutory approvals (from DGMS and central electricity board) for DG set, fuel lines etc.

The control panel shall be for AMF operation provided with 1 no. ACB with O/C &SC protection, AMF relay, ammeter, voltmeter, energy meter, frequency meter, power factor meter, low set earth fault relay using 250/5A 5P10 15VA CT in the neutral earthing conductor.

INDICATIVE BILL OF QUANTITY ELECTRICAL SECTION

The bill of quantity provided herein is only indicative guideline to enable the Bidder to offer his Price Bid based on the technical specifications

1.0supply, fixing and laying of incomer as per specifications given in Electrical Section and brief specs given below:

A. EbIncomer : 315 A 4P MCCB With ROM MCCB's shall have microprocessor based MCCB with variable current settings and having microprocessor based O/L, S/C & E/F protection release. Extended rotary operating mechanism with door interlock with defeat feature and padlock facility. MCCB should be with spreader link and phase barriers.

B. DG Incomer : 315 A 4P MCCB With ROM MCCB's shall have microprocessor based MCCB with variable current settings and having microprocessor based O/L, S/C & E/F protection release.Extended rotary operating mechanism with door interlock with defeat feature and padlock facility. MCCB should be with spreader link and phase barriers.

1 lot

2.0design, engineering, fabrication, supply to site of Motor Control Centre as per specifications given in the Electrical section, complete with switchgear components

Powder coated MCC Panel fabricated out of 14/16-gauge CRCA sheet steel not less than 1.6/2.0mm thick for load bearing members and 1.6mm for doors. in Non compartmentalisedfreestanding floor mounted, dust and vermin proof, with reinforcement of suitable size angle iron, channel, T -iron or flats as required. Cable gland plates shall be provided on top as well as bottom of the panels. Panels shall be treated with all anti-corrosive process before painting as per specification. Panels shall be suitable for 415V, 3-Phase, Four wire, 50 Hz supply complete with earth bus and lifting hooks as required in case of large panels.

1 lot

The panel framework may be angle iron/channel/bolted type construction. All gasket/rubber part shall be Neoprene flame/Dust/Vermin proof. Panels shall have 7/8 tank pretreatment process comprising of Degreasing, Rinsing, De-rusting, Rinsing, Phosphatissing, Rinsing, passivation & Drying followed by powder coat painting having a paint thickness of 60 microns or as specified.

3.0supply, installation, testing and commissioning of 150 KVA D.G. Set along with all accessories as per specificaitons given in the Electrical Section and brief specs as given below 150 KVA 3 phase, 0.415kV radiator type, four stroke, star connected stator, self excited, with DG controller, acoustic enclosure, neutral of DG shall be suitable to locate neutral CT etc. Diesel Generator with DG controller, fuel tank, Acoustic enclosure, antivibration pad, statutory approvals (from DGMS and central electricity board) for DG set, fuel lines etc. The control panel shall be for AMF operation provided with 1 no. ACB with O/C &SC protection, AMF relay, ammeter, voltmeter, energy meter, frequency meter, power factor meter, low set earth fault relay using 250/5A 5P10 15VA CT in the neutral earthing conductor.	1 lot
4.0supply, fixing and laying of cables and glanding and termination for all prime movers as per motor load list and layout enclosed	1 lot
5.0design, supply and construction of in plant earthing system, including external earth pits complete	1 lot

Bidder to note that, in case of any discrepancy between the Project specifications given here and the General Specifications given below, the former will be taken as the basis of evaluation and implementation.

GENERAL SPECIFICATIONS OF ELECTRICAL WORKS

CONTENTS

SECTION NUMBER	DESCRIPTION	SHEET NUMBER
1.0	Scope	3
2.0	Codes & standard	3
3.0	Service condition	4
4.0	General Design & constructional requirements	4
5.0	Equipment specification	6
6.0	Cabling system	12
7.0	Illumination System	14
8.0	Earthing& Lightning protection	16
9.0	Spares	17
10.0	Tests & Inspection	17
11.0	Installation, Testing and commissioning	18
12.0	Deviation	18
13.0	Bill of quantity	18
14.0	Documentation	18

LIST OF ATTACHMENTS

Technical Specification No.	Description	No. of Sheets
PC94-PNEL-TS-MVSB	Medium Voltage Switch Boards	15
PC94-PNEL-TS-IM	Induction Motor	11

Specification Sheet No.	Description	No. of Sheets
PC94-PNEL-SS-MVSB	Medium Voltage Switch Boards	1
PC94-PNEL-SS-IM	Induction Motors	1
PC94-PNEL-SS-LSDB	Lighting Sub Distribution Boards	1
PC94-PNEL-SS-LCS	Local Control Stations	1
PC94-PNEL-SS-ISS&P	Interlocking Switch Socket and Plug	1
PC94-PNEL-SS-Cable	Cables	1

Technical Particular No.	Description	No. of Sheets
PC94-PNEL-TP-MVSB	Medium Voltage Switch Boards	4
PC94-PNEL-TP-IM	Induction Motors	1
PC94-PNEL-TP-LSDB	Lighting Sub Distribution Boards	1
PC94-PNEL-TP-LCS	Local Control Stations	1
PC94-PNEL-TP-ISS&P	Interlocking Switch Socket and Plug	1
PC94-PNEL-TP-Cable	Cables	1

1.0 SCOPE

1.1 The scope shall include design, engineering, manufacture, testing at works, delivery to site in well packed condition, storing at site, transportation to work place, erection, testing and commissioning of complete electrical system required for Common Effluent treatment system Package for CPIIUC at SIDCO Pharmaceutical Complex, Alathur, Kanchipuram District, Tamil Nadu .

1.2 This specification shall be read in conjunction with all documents, data sheets attached and other relevant reference as specified therein.

1.3 The scope of work shall include but not limited to the following:-

DG Set
Motors
Local Control Stations for motors
Control Panel, if required.
Power Supply Board to give power to all motors and other equipment
Cabling
Illuminations
Earthing
Any other items not specified but required for the safe and complete operation of the system.

1.4 The Owner shall make the following provision in their respective switch boards/panels for the package bidder: (bidder to indicate power requirement)

- One No. of 415V Power Outlets (Normal) for bidder's Motor control centre(MCC).

Further all distribution of power and control supplies shall be in Bidder's scope.

1.5 The power cables from Owner's switchboards in utility substation to the bidder's MCC shall be supplied and laid by the contractor. Routing, supporting, termination of these cables within battery limit shall be in bidder's scope.

1.7 MCC room to accommodate MCC, Lighting sub-distribution board etc., shall be provided.

1.8 The scope shall also include obtaining all required statutory approval from all statutory bodies. The contractor shall carry out all modifications/alterations required by local statutory bodies.

1.9 This document contains specifications of the major equipments to indicate the basic requirement and serve as a guideline. However, it shall be the responsibility of the bidder to offer a complete electrical system of superior quality, even if the specifications of certain items are not given.

1.10 Bidder shall visit the site and collect all relevant information required for designing of complete system before quoting.

1.11 The bidder shall furnish area classification drawing with technical bid. All electrical equipments shall be selected as per area classification.

2.0 CODES & STANDARDS

2.1 The design and the installation shall be in accordance with established codes, good engineering practices and shall conform to the statutory regulations applicable in the country. The Bidder shall

be responsible for obtaining necessary approvals from the statutory authorities. e.g. Electrical safety Inspectorate, CCOE as applicable before commissioning of electrical facilities including electrical switchboards & panels supplied and commissioned by the bidder. The CEA clearance for electrical equipment and components thereof shall be obtained by the bidder.

All mandatory clearance from statutory bodies like Chief Electrical safety Inspectorate, state electricity board etc. for increase of connected load shall be in the scope of Contractor.

All mandatory clearances from central & state electricity authority before energizing electrical equipment shall be in the scope of contractor.

Latest version of main codes, standards and statutory regulations shall be considered as minimum requirements are as given below:

Indian Standard Specification
Indian Electricity Act
Indian Electricity Rules
International Electro-Technical Commission
The Factory Act
API Standards/IEEE
Tamil Nadu State Pollution Control Board
Central Pollution Control Board

2.2 Some of the bare minimum relevant Indian Standards are as listed below. However, system/equipment design shall be in line with latest edition of all applicable standards.

IS: 11448	Application Guide For AC Electricity Meters
IS: 732	Code Of Practice For Electrical Wiring Installations System Voltages Not Exceeding 650V
IS:1248	Direct Acting Analogue Electrical Measuring Instruments And Their Accessories: Part. 1 General requirements (4th Revision)
IS: 1646	Code Of Practice For Fire Safety Of Buildings And Electrical Installations
IS: 10322-1	Specification For Luminaries, Part-1, General Requirements
IS: 60079-1	Explosive Gas Atmospheres–Part-1 Equipment protection by Flameproof Enclosures “d”
IS: 2309	Code Of Practice For The Protection Of Buildings And Allied Structures Against Lightning
IS: 2705	Current Transformers
IS: 3034	Code Of Practice For Fire Safety Of Industrial Buildings, Electrical Generating & Distributing Stations
IS: 3043	Code of Practice For Earthing
IS: 3156	Voltage Transformers
IS: 3646	Interior Illumination: Part I & Part II
IS: 3716	Application Guide For Insulation Co-ordination
IS: 60034-5	Degree Of Protection Provided By Integral Design Of Rotating Electrical Machines (IP Code)
IS: 5571	Guide For Selection Of Electrical Equipment For Hazardous Areas
IS: 5572	Hazardous Areas Other Than Mines For Electrical Insulations Area Having Flammable Gases And Vapours
IS: 5578	Guide For Marking Of Insulated Conductors (1st Rev)
IS: 6362	Designation Of Methods Of Cooling of Rotating Electrical Machines

IS: 60079-7	Equipment Protection By Increased Safety "e"
IS: 6665	Code Of Practice For Industrial Lighting
IS: 7689	Guide For Control Of Undesirable Static Electricity
IS: 9628	Specification For Three Phase Induction Motor With Type Of Protection "n"
IS: 9676	Reference Ambient Temperature For Electrical Equipment
IS: 11353	Guide For Uniform System Of Marking & Identification Of Conductor & Apparatus Terminals
IS: 12360	Voltage Bands For electrical installations including preferred voltage and frequency
IS: 12459	Code of practice for fire protection of cable runs
IS: 12615	Energy Efficient Induction Motors – Three phase Squirrel Cage
IS: 13234	Guide for short circuit calculations
IS: 60079-0	General requirements for electrical apparatus for explosive gas atmosphere
IS: 13408	Code of practice for the selection, installation and maintenance of electrical apparatus for use in potentially explosive atmospheres
IS: 10918	Vented type nickel cadmium batteries
SP: 30	National Electrical Code (NEC) - BIS Publication

2.3 Any other standard may be followed provided it is equivalent or more stringent than the standards specified above.

3.0 SYSTEM DETAILS

In this Specification LV system voltages have been indicated as 415V, 3 phase and 240V, single phase.

A. Normal Power	415V ± 10%, 50Hz ± 5%, 3Ph, 4 W
B. Emergency Power	415V ± 10%, 50Hz ± 5%, 3Ph, 3 W
C. Distribution Equipment	a) 415V ± 10%, 50 Hz ± 5%, 3 Ph, 4 W solidly grounded neutral. b) 240V ± 10%, 1 Ph, 2W, 50 Hz ± 5% solidly grounded neutral.
Combined variation in voltage & frequency	± 10%
Control Supply for: 415V motors Switch Gear: a. Closing & tripping b. Auxiliary power	AC 240V ± 10%, 50 Hz ± 5%, 1Ph (For contactor controlled motors) DC 110V ± 5% (For breaker controlled motors) DC 110V ± 5%, 2 W AC 240V ± 10%, 50 Hz ± 5%, 1Ph, 2W
Voltage Ratings - Motors upto 150 KW - Heaters	 415V, 3 Ph AC To Manufacture's requirement
- Space heaters - Lighting - Panic Lights - Power Sockets/Receptacle	240V, 1 Ph AC 415V/240V AC 110 DC 415V, 3 Ph AC/240V, 1 Ph AC

- Portable safety lamps & Tools	24V AC

4.0 GENERAL DESIGN AND CONSTRUCTIONAL REQUIREMENTS

4.1 The electrical system and installation shall be designed as per latest practice to provide maximum reliability, flexibility, safety to personnel and equipment and ease of operation and maintenance.

4.2 All equipment shall have adequate and standard ratings.

4.3 All electrical equipment to be located in indoor plant area shall be enclosed in dust, damp and vermin proof enclosure equivalent to IP-54 as per relevant IS.

4.4 Equipment to be located outdoor shall be weather proof and have IPW-55 protection as per relevant IS and shall also be provided with canopy as far as practicable.

4.5 The equipment, located in hazardous area shall be in flameproof execution.

4.6 The equipment must be certified by statutory authority for use in the specified hazardous area.

4.7 All mating surfaces shall be properly machined. Neoprene gaskets shall be used for dust and weather proofing. The gaskets shall be without any discontinuity.

4.8 Only non-hygroscopic materials shall be used for insulation. All insulation shall be specially impregnated to withstand ambient conditions and atmospheric pollution.

4.9 All live parts shall be adequately protected to prevent inadvertent or accidental contact.

4.10 Earthing terminals complete with sockets and identification marks shall be provided on the enclosure of all electrical equipment. The number of terminals shall be two for equipment rated above 230 V and one for those rated 230 V and below. Additional internal earthing arrangement shall be provided for flameproof equipment.

4.11 All equipment shall be provided with stainless steel nameplates containing the particulars as per relevant IS/IEC along with the description and Code Nos. of equipment.

4.12 All the electrical equipment shall be provided with weather proof heavy duty double compression type rolled Aluminium cable glands, proper crimping lugs and terminal blocks suitable for the cable sizes required.

4.13 All detailed drawings, equipment sizing make & type of equipment shall be subject to approval of Owner's/PMC.

4.14 The rating of the electrical equipment wherever specified in the bid package are the minimum ratings. The bidder shall check & revise the ratings (up words) if required based on actual load and furnish the calculations for Owner's/PMC review / approval.

4.15 The MCC room housing MCC, Lighting sub-distribution board etc. shall be provided. This MCC room shall be fitted with an adequately sized window / split air conditioner and other accessories such as rubber mats, aesthetic roofing etc. The MCC room shall be

located in the safe area. However all equipments shall be suitable for operation under specified ambient conditions even on failure of air conditioning system.

5.0 EQUIPMENT SPECIFICATION:

5.1 **General Constructional Features**

5.1.1 The equipment shall be suitable for tropical climate conditions and corrosive and dusty atmosphere.

5.1.2 The equipment to be installed in indoor plant area shall be enclosed in dust, damp and vermin proof enclosure as per relevant Indian Standards/IEC.

5.1.3 The equipment to be installed in outdoor plant area shall have IP 55 enclosure.

5.1.4 FRP (fire retardant and UV stabilized) canopies shall be provided for all outdoor equipments like starters, LCS, SDBs, sw. sockets etc.

5.1.5 The high voltage switchboards, to be installed inside the building shall have enclosure Class IP 4X. All other switchboards to be installed inside building such as control room and Sub-Station/MCC Room shall have IP: 52 enclosures and those equipment requiring ventilation opening such as battery charger/UPS etc. located in air conditioning room may have IP 31 enclosure however, opening for the ventilation shall be covered with fine wire mesh.

5.1.6 If the equipments to be located in hazardous areas shall be suitable for hazard involved and shall have the following additional explosion protection:

Equipment		**Zone-1**	**Zone-2**
i)	Motors	Exd	HV motor-Exd LV motors-Exe
ii)	Starter panels	Exd	Exd
iii)	Control panels	Exd/Exp	Exd
iv)	Local Control Stations	Exd	Exd
v)	Lighting fixtures, hand lamps	Exd	Exe/Exd
vi)	Switch sockets	Exd	Exd
vii)	Switches/Isolators	Exd	Exd
viii)	Junction Boxes	Exd	Exd
ix)	Exhaust Fan	Exd	Exd
x)	Other equipments producing sparks under normal operation	Exd/Exp	Exd
xi)	Other equipments not producing sparks	Exd/Exp	Exn/Exe

5.1.7 If Motors falls in hazardous area and also fed from VFD shall have enclosure protection flameproof Ex'd' irrespective of area classification.

5.1.8 All the electrical equipment shall be provided with rolled aluminium/stainless steel heavy duty doublecompression

type cable glands and crimping lugs for the cable terminations.

5.1.9 The outside surface of all equipment shall be painted after suitable pre-treatment by the application of two coats of anti-rust and corrosion resisting epoxy based paints.

5.2 **DG Set**

5.2.1 The Emergency power shall be arranged by the contractor through one number suitably rated DG Set at required voltage. The capacity of DG Set shall be finalized by the contractor to meet the emergency power requirement of proposed Common Effluent Treatment Plant keeping a margin of 10% over the actual requirement and internal consumption of the DG Set auxiliaries.

5.2.2 The DG Set control shall have PLC based latest state of art technology. Brushless excitation system shall be used in generator.

5.2.3 The starting of engine shall be pneumatic, i.e. air charging type.

5.2.4 DG Set shall have all its auxiliaries installed and controlled from same place. The control of DG Set shall be based on 110 V DC which shall be supplied from the DC panel. Separate DC battery bank with battery charger shall be provided.

5.2.5 The auto starting time (time between actuation of loss of power contact to availability of emergency power) in case of failure of main power shall be in accordance with the requirement of process parameters. The DG power shall be made available in such a time that any plant is not affected due to failure of normal power.

5.2.6 The auxiliary power supply board to feed the auxiliaries of DG Sets shall have dual power supply, one from the normal power supply source of plant and other from the DG Set itself. There shall be a provision of auto changeover in the incoming supply of auxiliary power supply board of DG Set. The emergency power distribution board shall be kept in a separate room near to engine room of DG Set. The outgoing feeders for 415A and below in emergency power distribution board shall have switch fuse unit. The incomer and larger rated feeders shall be provided with air circuit breaker. A comprehensive electrical protection system shall be provided to protect the generator as well as individual feeder. The incomer shall have a KWH meter along with ammeter, voltmeter etc.

5.2.7 There shall be a separate control panel to control the auxiliaries, and comprehensive alarm and fault indication

system shall be provided to indicate the status of auxiliaries as well as Diesel Generator Set.

5.2.8 The quick start auto-mains failure DG Set of adequate rating shall be compressed air started and radiator cooled type suitable for supplying emergency load.

5.2.9 DG Set shall be supplied with day oil storage tank (12 hr. capacity at full load continuous operation), bulk oil storage tank, associated piping, valves, accessories, earthing of all equipments, all power and control cables as required.

5.2.10 The bidder shall also include relevant spares as recommended by the manufacturer for two years trouble free operation of DG Set.

5.2.11 Emission from DG Set shall met the requirement of Local Pollution Norms.

5.2.12 DG Set shall be provided with suitable acoustic enclosure to restrict the noise level to 85 dB at 1 metre.

5.2.13 DG Set shall be provided with digital multifunctional meter with communication port for energy management at remote location. Additionally digital type ammeter, voltmeter and Hour Meter shall be provided separately. Bare minimum protection devices for DG Set have been as indicated below; however contractor shall provide any other necessary protection relays required for complete protection of system.

5.2.14 Differential, Stator Earth Fault, Rotor Earth Fault, Phase Unbalance, Field Failure, Over Current (Voltage Restrained), Over Voltage, Winding Temperature Alarm, Bearing Temperature Alarm, Under Frequency, Over Frequency, Reverse Power. A microprocessor based composite generator management relay shall be used for the above mentioned protections. Provision for Winding Temperature Alarm and Trip, Bearing Temperature Alarm and Trip shall also be there.

5.3 Motors

5.3.1 All the motors shall be 3 Phase, squirrel cage induction type.

5.3.2 The rating of the motors shall be as per the sizes indicated in relevant IS/IEC. The margin between the installed power and absorbed power shall not be less than the following:

Motor Rating	Margin above Driven M/C Absorbed Power
Less than 22 KW	25%
22 KW to 55 KW	15%
75W and above	10%

5.3.3 The duty cycle of motors shall match the driven machine requirement.

5.3.4 All motors rated for up to 150KW shall be suitable for 415V.

5.3.5 The motors shall have maximum rated duty as per relevant Indian Standard/IEC. Consideration shall be

given for special duty motors wherever required e.g. cranes etc.

5.3.6 All LV motors shall be TEFC type as per relevant Indian Standards/IEC. All motors shall be Class-F insulated with temperature rise limited to that of Class-B.

5.3.7 Normally the motors shall be suitable for DOL starting. However, motors started through VFD shall be suitable to run at 30% to 100% of rated speed and compatible with the VFD.

5.3.8 All motors rated 30 KW and above shall have space heater provision.

5.3.9 All LV motors shall be of efficiency class IE2 as per IS 12615: 2011/IEC 60034-30.

5.3.10 The starting current i.e. breakaway current of 415 V Motors shall not exceed the values indicated in IS: 12615. Also there shall be no further positive tolerance on the values of breakaway current.

5.3.11 Type test certificate of similar motor for use in specified hazardous area (if applicable) shall be furnished.

5.3.12 The duty cycle of the motor shall meet the process and driven machine requirement.

5.3.13 The mechanical parameters such as duty, mounting type, shaft extension, direction of rotation, starting torque requirements etc. shall be adequate for the application. Sleeve or anti friction type bearings shall be used. Vertical motors shall have thrust bearings suitable for the load imposed by the driven machinery. Motors with sleeve bearings may require proximity probes to measure shaft vibration adjacent and relative to the bearings. Generally, all motors, except for application such as crane, hoist, turbine/engine starting, shall be designed for continuous duty with rated load.

5.3.14 Motor rated 3.7KW & above shall have on line greasing arrangement for both DE & NDE side bearings. The arrangement shall be complete with grease nipple plug & drain plug located at convenient location.

5.3.15 The design and specification of motors shall conform to Specification Sheet (PC94-PNEL-SS-IM) and Technical Specification (PC94-PNEL-TS-IM) attached.

5.4 **Low Voltage Switchgears**:

5.4.1 For control of all low voltage motors and other equipment and auxiliaries required number of modules in Motor Control Centre (MCC) shall be provided. These shall be of fully non-draw-out, Single front type.

5.4.2 There shall be three positions for Breaker/Contactor trolley: - Service, Test and Isolate. In service position, the power connections shall be made; but in test and isolate mode, the power connection of bus bars shall be automatically removed.

5.4.3 Suitable shutter arrangement shall be provided to protect the person from accidental contact with live bus in trolley chamber.

5.4.4 The minimum degree of protection shall be IP-52 for LV Switchboard.

5.4.5 FRP supports shall be used for bus bars with adequate clearances and creepage distance to prevent flash over due to effect of dust & moisture.

5.4.6 Protective relays shall be mounted on the front of the switchgear panel. Draw out type relays shall be used.

5.4.7 Protective relays for incoming feeders, bus ties, outgoing feeders and motor feeders shall be static electronic/ electromechanical type; Schneider make.

5.4.8 All meters shall be digital multifunctional meters with communication port for remote uses/application. Additionally digital type ammeter, voltmeter and Hour Meter shall be provided separately for various feeders.

5.4.9 The motor feeders controlled through vacuum circuit breakers shall be provided with surge arrestors.

5.4.10 A continuous ground bus shall be provided at the bottom of the switchgear and in cable connection side for grounding the switchgear, breaker trolley as well as to ground the cable glands.

5.4.11 The minimum thickness of sheet steel used in LV switchgear including UPS, ASPB etc. shall be as under:-

Base Channel	minimum 3.0 mm
Load Bearing Members	minimum 2.0 mm
Doors and covers	minimum 1.6 mm

5.4.12 The switches boards shall have adequate short-circuit ratings and be suitably sized for the load and spare capacity foreseen. The short time rating of busbar shall be 3 seconds for HV switch boards and 1 second for other boards.

5.4.13 For other boards sufficient number of spare feeders to the extent of min. 20% for each type & rating shall be provided.

5.4.14 The switch boards shall have PVC insulated busbar system suitable for rated voltage. At joints of these busbars removable shrouds shall be provided.

5.4.15 All switch boards shall generally have two sections operating independently with two 100% rated incoming feeders and with bus coupler open having facility for changeover in the event of failure of either of the incoming circuit breakers.

5.4.16 No common alarm circuit (except hooter/bell) in bus coupler feeders as each feeder will have its own microprocessor based annunciator.

5.4.17 Every enclosure door that provides access to live parts operating at 240 V AC and above shall be mechanically interlocked with a circuit interrupting device on the supply

side such that when the door is open, the equipment is de-energised.

5.4.18 Control supply for motor feeders having switch-fuse units in PMCC/MCC and VFD panels etc., shall be taken from panel itself and motor controlled with breaker shall have control supply shall 110V DC control supply irrespective of its being HT or LT.

5.4.19 For motors with auto-starting provision, trip of a running motor will start standby motor automatically.

5.4.20 Each vertical section of switchboards shall be provided with space heater of suitable rating, rated for 240 V AC and controlled through double pole MCB and a reliable thermostat. An analog ammeter shall be provided on front of the panel to show space heater current. The space heater shall be controlled by a reliable thermostat.

5.4.21 All switchboards / panels shall be of single-front type.

5.4.22 415 V switchboards shall include the following:

a) Motor Control Centres (MCCs)
b) Main Lighting Distribution Boards (MLDBs)
c) Auxiliary Services Power Boards (ASPBs)
d) Emergency Power Distribution Boards

5.4.23 Low voltage switchboards shall be metal clad, arranged with self supporting units and assembled together in a row. The degree of protection shall be IP 52.

5.4.24 The switchboards shall be suitable for extension at both the ends.

5.4.25 The main bus bars of LV switchboards shall have heat shrinkable insulated sleeves and shall be made of high conductivity aluminium alloy.

5.4.26 Bus bars shall be of uniform cross section and supported on non-hydroscopic FRP insulators with adequate clearances and creepage distance to prevent flash over due to effect of dust/moisture.

5.4.27 Sufficient bus supports shall be given to give adequate mechanical strength during short circuits.

5.4.28 A continuous ground bus shall be provided at the bottom in the MCC for grounding the MCC.

5.4.29 Rated short circuit breaking capacity shall be minimum 50 KA for 1 sec.

5.4.30 Motor feeders below 75 KW rating shall be contactor controlled. All other feeders of 415 V switchboards shall be provided with switch-fuse units. All outgoing feeders shall be non draw-out type in all the switchboards.

5.4.31 Switchboards shall be provided with thermostatically controlled anti-condensation heaters.

5.4.32 All units in the MCC shall be completely accessible and removable from front. Both power and control connections shall be plug-in/stab-in type.

5.4.33 Busbar clearances shall conform to relevant Indian Standard/IEC for equipment voltages up to and including 500 V AC.

5.4.34 The draw out modules shall be standardized and it shall be possible to interchange any module with a module of same size. The components to control the equipment like switch, starter, fuse, auxiliary relay etc. shall be wired as a unit on the individual module. Safety shutter shall be provided to prevent direct access to live parts when the chassis is removed.

5.4.35 The entire draw out construction should be designed for safe operation during placement or removal of chassis. An earthing arrangement shall be provided which will make contact first before the power contacts are made and break last. Each module shall control one motor in general.

The door shall be interlocked so that it cannot be opened unless the isolating switch on that module is OFF. However, it shall be provided with a door defeat mechanism for intentional opening when on line for testing and inspection purpose.

5.4.36 Control switches for breaker control shall be provided in each breaker cubicle. Circuit breaker shall be interlocked to prevent withdrawal of a closed breaker or insertion of a closed breaker. Each breaker shall be provided with anti pumping device.

5.4.37 Provisions shall be made to manually close/trip circuit breakers on loss of control voltage.

5.4.38 All low voltage switchboards shall be provided with 20% spare outgoing feeders or minimum one of each rating (fully wired) and with all the components.

5.4.39 All ACB feeders shall be provided with ON, OFF, Trip, Trip Circuit Healthy indications.

5.4.40 All indication lamps shall be of the LED type with inbuilt LVGP protection.

5.4.41 The design and specification of Switchboards shall conform to Specification Sheet (PC94-PNEL-SS-MVSB) and Technical Specification (PC94-PNEL-TS-MVSB) attached.

5.5 Local Control Stations

5.5.1 Local Control Station (LCS) housing necessary components wired shall be provided as per process and operational requirement of the plant for control of all motors. LCS for motors up to 5.5 KW shall have start-stop push button and for motors above 5.5 KW shall have start-stop push button and Ammeter.

5.5.2 The enclosure for LCS shall be of die cast LM-6 Aluminium alloy in weather proof construction. A rain-hood shall be offered as an additional item. It shall be made of 14 gauge Aluminium sheet bent to shape. In case of fibre glass enclosure, these can be made of fibre glass. The enclosure shall be suitable for mounting on wall or onsteel structure.4 Nos. holes suitable for 12 mm bolts shall be provided outside the enclosure for fixing the control stations.

5.5.3 All the components shall be mounted on a base plate inside the enclosure. Necessary actuating system for push buttons/ control switches, non yellowing acrylic/glass cover for ammeter and indication lamps shall be provided on the front cover. No wiring shall be carried out on the front cover.

5.5.4 Each control station shall be provided with minimum 2 mm thick stainless steel name plates indicating the code number and description of the equipment controlled by it. Similar labels shall be provided for all indication lamps push buttons, control switches. The name plate and label shall be fixed with screws only.

5.5.5 The ammeter shall be flush mounting, moving iron spring controlled type, of accuracy class 1.5 with square face of minimum size 72 mm x 72 mm having scale range 0-240°. The ammeter for motor shall be provided with uniform scale upto CT primary current and compressed end scale up to the 6 times the C.T. primary current. Adjustable red pointer shall be provided to indicate the full load current of the motors. Zero adjusters shall be provided for operation from the front of the meter. All ammeters shall be operated through 1 Amp. CTs only.

5.6 **Switch Sockets**

5.6.1 Switch socket outlets conforming to relevant IS shall be installed throughout the plant. Those provided for welding outlets shall be of 63 Amp,415V, 3-phase,5-pin design and shall be located to cover a radius of 50m.These shall be fed from distribution board maximum 3 Nos of sockets shall be connected to one circuit..

5.6.2 Switch sockets for temporary lighting and portable tools shall be of 15 Amp, 230V, 1- phase, 3-PIN design. Each switch socket outlet shall be provided with residual current device as per relevant IS. These shall be located to cover a radius of 30 meter and shall be fed from Lighting Sub Distribution Board. Maximum 4 Nos. of circuit shall be connected to one circuit.

5.6.3 The switch socket shall be heavy duty industrial type. The interlocking arrangement shall be such that it is not possible to insert or withdraw the plug with the switch in 'ON' position. The enclosure of switch sockets and plugs shall be of LM-6 cast aluminium alloy in weather proof execution, suitable for fixing on wall/structure. Suitable arrangement for looping of cables from one switch socket to the other shall be provided. Necessary terminals, cable glands and lugs for looping shall be provided. Also one no. threaded plug for each switch socket shall be supplied loose. Further interlocking shall be provided so that the contacts cannot be energised when the plug and socket are separated.

5.6.4 The Air break switches shall be quick make, quick break rotary type and of utilisation category AC-23. Switches shall be hand operated from outside the cover. The switch handle shall remain fixed to the front cover while removing the front cover.

5.6.5 The sockets shall be provided with link type HRC fuses. The fuses shall be capable of withstanding a short circuit current of 50 KA and shall be delayed action type. These shall be mounted on a shrouded base.

5.6.6 The socket outlet shall be located in the lower part of the enclosure and shall be provided with a threaded aluminum cover attached to the body with G.I. chain, to protect the socket after extraction of the plug. Spring loaded automatic shutter shall not be acceptable.

5.6.7 The plugs shall be so constructed so that these can be easily fitted in to the socket outlets and shall be provided with knurled knob arrangement for screwing on the body of the socket so that it can be securely fixed on the top.

The plug base and cover shall be firmly secured to each other and shall be sufficiently robust in construction to withstand normal usage. The plug and socket contacts shall be self aligning type with best electrical continuity.

The plug shall be provided with dust proof cable entry suitable for receiving TRS flexible heavy duty copper conductor cable of specified size. The arrangement shall be such that the conductors are relieved from strain including twisting where they are connected to the terminals and that the outer surface of the cable at the place of entry is not damaged.

5.7 **Make of equipment**

The make of various equipments shall be as per the vendor list for the equipments listed in Doc. No. PC94-PNEL-EVL.Other's make equivalent product complying with Indian Standards shall also be acceptable subject to approval of Owner's/PMC . In case of any deviation from this prior approval from the Owner's/PMC shall have to be obtained.

6.0 CABLING SYSTEM

6.1 All LT power and control cables for LT switchgear shall be supplied by the Contractor. Supporting and laying of cables, terminations at switchgear end and at the equipment end shall be in bidder's scope.

6.2 Cables shall be sized considering the following factors.

Maximum continuous load current
Voltage drop
System voltage
Laying conditions

- Derating due to ambient air temperature, ground temperature, grouping and proximity of cables with each other, thermal resistivity of soil etc. shall be taken into account

6.3 All LT power cables shall be with stranded aluminium/copper conductor with PVC insulation, PVC inner sheathed, armoured, PVC outer sheathed FRLS type and construction as per IS: 7098 (Part 1). Power cables with conductor size upto and including 16 sq. mm shall

be with copper conductor, conductor size above 16 sq. mmshall be aluminium conductor.

6.4 All control cables shall be with 2.5 sq. mm, stranded copper conductor with PVC insulation, PVC inner sheathed, armoured, PVC outer sheathed FRLS type and construction as per IS: 1554 (Part 1). Control cables shall be twisted pair or shielded wherever electro-magnetic/electrostatic interference is anticipated.

6.5 All control cables shall have 20 % spare cores. All cores shall be identified with numerical core numbers printed on core instead of colours.

6.6 All cables shall be armoured and shall have extruded inner and outer sheath.

6.7 Cables connected in parallel shall be of the same type, cross section and terminations.

6.8 All power and control cables shall be in continuous lengths (except for very long feeders) without any joints. The cables used for lighting and wires in conduits shall have appropriate junction boxes with adequately sized terminals. Cable joints in hazardous areas (if applicable) shall not be permitted.

6.9 The maximum voltage drops in various sections of the electrical system shall be within limits stated in the following table:

S. N.	System Element	Maximum Permissible Voltage Drop
2.	Bus duct between transformer secondary and switchgear (HT/LT)	0.5 %
3.	Cables between PMCC and MCC or auxiliary switchboard i) Location of switchboard: Near PMCC ii) Location of switchboard: Remote	 0.5 % 2.5 % (Max.)
4.	Maximum Voltage drop up to LT motor terminal: During running condition During starting condition	 5 % 10 %
5.	Cables between auxiliary switchboard and lighting panel	Max. 1.5 %
6.	Circuit between lighting panels and lighting points	4 %
7.	DC supply circuits/UPS circuits	5 % and/or as per instrumentation requirement

The voltage available at the motor terminals during start-up must be sufficient to ensure positive starting or re-acceleration of the motor (even with the motor fully loaded, if required) without causing any damage to the motor.

For LT motors, the voltage available at the motor terminals must not be less than 80% of the rated value during start-up or re-acceleration.

6.10 Design Criteria for Cables and Short Circuit Withstand Time:

- Design criteria for cables

S. N.	Design Criteria	415V
1.	Loads beyond 1000A rating	Cable /Bus duct
2.	Loads located beyond 1 KM	N.A.

3.	Loads located up to 1000 M	Cable
4.	Recommended limiting size of multi-core cable (mm^2)	4 CoreX300
5.	Insulation voltage grade	1100V Earthed
6.	Type of cable insulation	Power: XLPE Control: PVC

Suitable derating factors based on the site ambient conditions, method of laying and the no. of cables laid together shall also be applied.

Short circuit withstand time (seconds) shall be as follows for breaker controlled feeders

Feeders to motors and transformers	0.25 sec
Feeders from PCC/PMCC to MCC	0.5 sec

6.11 The minimum size of power cables shall be 16 sq. mm (Al) and 2.5 sq. mm (Cu).

6.12 The control cables shall be 2.5 sq. mm (Cu). However, wiring in the panel/switch boards may be by means of 1.5 sq. mm (Cu) cables except for CT wiring which shall be 2.5 sq. mm.

6.13 The cables shall generally be laid on overhead cable racks/trays. These racks/trays shall have proper supporting arrangement. Pipe racks, supports where available, shall also be used as cable rack to support the cable trays.

6.14 The cable trays and risers shall generally be of G.I. prefabricated ladder type of 150/300/450mm wide tray.

6.15 G.I. prefabricated cable trays and its accessories such as coupler plates, risers, bends etc. shall be fabricated from 3.0 mm thick M.S. sheets. The rung spacing shall be 300 mm. And side channel shall be of 100x15mm. The cable trays and their accessories shall be hot dip galvanized after fabrication. The galvanizing shall be uniform, clean, smooth, continuous and free from pores. The amount of zinc deposit at any point shall not be less than 910 gm per Sq. metre.

6.16 The cable trays shall be designed to avoid any sharp bend in the cables. The corners of the cable trays shall have a smooth circular radius, as required. For multi-tier trays, the minimum gap between the two tiers and between top tier and ceiling beam (bottom) shall be 300 mm.

6.17 In paved areas near the equipment, if required, the cables may be laid in buried G.I. pipes. Where cables rise up from under-ground, protection by means of G.I. pipe upto a minimum height of 300 mm above grade level shall be provided with open ends sealed.

6.18 All cables shall have their run No. marked close to their termination as well as intermediate positions for proper identification.

6.19 All cables shall be terminated at the equipment by means of double compression type rolled Aluminium /Stainless steel cable glands and crimping lugs. All cable entries shall be from bottom only.

7.0 ILLUMINATION SYSTEM

7.1 General Requirement

7.1.1 The scope of illumination shall cover design, calculations, lighting layout, cabling etc. for the complete plant and its adjacent area. The system shall include the lighting sub-distribution board, fixtures with lamps and tubes, ceiling fan with regulator, 15 A, 3 pin switch sockets, lighting poles, towers, cables, cable trays, junction boxes etc. as required for the completeness of the job.

7.1.2 To supply power to lighting fixture & switch sockets, Lighting Sub Distribution Board (LSDB) shall be provided.

7.1.3 Circuits controlling outdoor lighting and indoor lighting shall be separate. Outdoor lighting shall be automatically controlled through Photo-cell/Synchronous time, with provision for manual control. Each area shall be fed from at least two lighting sub-circuits.

7.1.4 In general the lighting shall be provided by fixtures using mercury vapour lamps, high pressure sodium vapour lamps (wherever applicable) and fluorescent lamps. The

minimum illumination levels and type of fixtures in the various sections of the plants shall be as indicated.

S.N.	AREA	LUX	TYPE OF FIXTURES
1.	YARD		
	i. Open areas	5	150/250W HPSV/250/400W HPMV flood light
2.	PLANTS		
	i. Operating platforms	100	80/125W HPMV well glass
	ii. Non-operating platform/general process areas & walk ways	50	80/125W HPMV/ well glass, 2x40W fluorescent
	iii. Compressor House / Pump house	150	125W/250W/ HPMV well glass or 2x40W fluorescent
	iv MCC room		
	- Front of panel	150	2x40W surface mounted mirror optics fluorescent
	- Back of panel	100	2x40W surface mounted mirror optics fluorescent
3.	CONTROL ROOMS		
	i. - Front of panel	400	2x40W recess mounted mirror optics fluorescent
	ii. - Back of panel	200	2x40W recess mounted mirror optics fluorescent
4.	Stair Cases	100	80W HPMV /160 W well glass
5.	Panic Lighting	-	60W Incandescent well glass/ 2x11W CFL type

7.1.5 The specified illumination level shall be maintained after considering maintenance factor of 0.6 for plant and outdoor areas and 0.7 for indoor areas and utilization factors as per manufacturers catalogues for the size of room and type of fixtures.

7.1.6 Panic lights shall be provided at convenient locations in all plants for safe evacuation of operation personnel. These shall be switched 'ON' automatically on failure of power supply to main lighting board and shall switch 'OFF' automatically, after 1 hour of switching 'ON' power supply. Location of these lights shall be judiciously decided from safety considerations. The outdoor lighting shall be photocell / timer controlled.

7.1.7 15A, 230V, 1 phase, 3 wire (P.N.E) switch sockets shall be provided in the plant and non plant buildings to facilitate operation of hand tools. And shall be fed through separate circuit of LSDB. Normally 4 Nos. of socket shall be connected to a circuit.

7.1.8 Aviation lights shall be provided on tall structures and all isolated structures as per statutory requirements.

7.1.9 For lighting fixtures and 15 Amp plug socket circuits, 3 Core, 2.5 sq.mm PVCAPVC (Cu) cable shall be used.

7.1.10 The lighting poles and masts shall be made of hot dip galvanized iron. Junction boxes and control gearboxes etc. Shall be made of cast Aluminium alloy LM-6.

7.2 **Lighting Sub-distribution Boards**

7.2.1 The lighting sub distribution boards shall be fabricated out of 2.5 mm thick cold rolled sheet steel and shall be suitable for mounting on wall/structure.

7.2.2 The miniature circuit breakers shall be so mounted inside the enclosure that their operating knobs project outside for easy operation. The cut-out for the knobs on the enclosure shall be lined with gasket for dust proofness. For further protection against ingress of dust, the portion where the knobs have protruded out shall be provided with another external front cover, internally hinged at the top, gravity operated and with a knurled knob at the bottom. The external cover shall be flushed with the main cover. Continuous neoprene gasket shall be provided to make the board completely dust and weather proof.

7.2.3 The incoming shall have 63 Amp TPN RCCB of 30 mA sensitivity and outgoing shall have 15Amp MCB's of single pole and switched neutral type. The LSDB may have 6, 9 or 12 outlet as required.

7.2.4 The board shall be complete with terminal block, cable glands, cable lugs and other accessories as specified.

7.3 **Lighting Fixtures**

7.3.1 The Lighting fixtures shall be complete with all accessories including the control gear box and lamp. The control gear box for fluorescent lamp fixtures shall consist of starter, ballast and capacitor for power factor improvement and for correction of stroboscopic effect. The control gearbox for mercury vapour fixtures shall consist of ballast and capacitor for power factor

improvement. The control gearbox for sodium vapour fixtures shall comprise ballast, capacitor and electronic igniters.

7.3.2 The fixtures shall be provided with cable glands and a terminal block suitable for termination of copper conductor upto 2.5 sq.mm size. Looping facility shall be provided for HPSV and HPMV fixtures.

7.3.3 The fixture / control gear box shall have minimum degree of protection equivalent to IP:55 for outdoor installation and IP-43 for indoor installation.

7.3.4 The fixture shall be so designed that it shall be possible to maintain or replace the different accessories without difficulty, including the replacement of the lamp.

7.3.5 **Well Glass Type fixtures**:

The fixture housing shall be made of cast aluminium alloy in dust, vapour and weather proof / flameproof execution finished in epoxy stove enamel, grey outside and white inside, provided with clear heat resistant glass which shall be fitted with neoprene gasket and 3 mm G.I. wire guard. Dispersive reflectors to be supplied with the fixtures shall be of CRCA sheet steel vitreous enamelled.

7.3.6 **Decorative Fluorescent Fixtures:**

The fixtures shall be surface/recessed mounted, mirror optics luminaire designed to provide high light optic with low brightness and wide batwing light distribution. Housing shall be of CRCA sheet steel finished in stove enamel, white inside and grey outside, complete with ballast starter, capacitor wired upto the terminal. Mirror should be made of high purity anodised aluminium sheet.

7.3.7 **Flood Lighting Fixtures:**

The fixtures shall be in weatherproof /flameproof execution suitable for high pressure mercury / sodium vapour lamp and shall comprise of epoxy stove enamelled, cast aluminium alloy body, a clear heat resistant flat toughened glass, an anodised mirror polished aluminium reflector and a focussing device.

The fixtures shall be having an arrangement for rotation on both horizontal and vertical planes and locking in any desired position.

The complete unit shall be mounted on a heavy base of cast iron for fixing the fixture on a structural platform.

All cast iron and M.S. structures provided in the fixture shall be epoxy painted.

A separate control gear box suitable for the rating of the lamp shall be supplied alongwith the fixture.

7.4 **Junction Boxes**

Weather proof cast Aluminium junction boxes with cable glands and terminals of suitable size shall be used for looping the cables wherever required. All unused cable entries shall be sealed with threaded plug.

7.5 **Lighting Poles and Towers/Masts**

Poles and towers/masts of suitable types shall be used for providing illumination in outdoor areas, wherever required. Details of poles and towers/masts shall be submitted alongwith the bid. These shall be suitable for wind load as specified.

8.0 EARTHING & LIGHTNING PROTECTION SYSTEM

8.1 **EARTHING**

8.1.1 Complete earthing installation shall be done as per IS: 3043.

8.1.2 Common underground earthing grid shall be provided covering sub-stations and plants. The overall earth resistance (dry) shall be limited to 1 ohm.

8.1.3 Earthing rings shall be provided around sub-stations/MCC Room and plants which in turn shall be connected to the common earthing grid. Minimum size of main grid shall be 75mmX10mm.

8.1.4 Earthing grid/ring shall comprise of buried GI earth strips and GI pipes/electrodes.

8.1.5 Separate earth electrodes shall be provided for system neutral earthing. For equipment earthing, minimum two numbers of electrodes shall be provided around each plant/section. However, all these earth electrodes shall be inter-connected.

8.1.6 Inter-connecting pits having an earth bus in an enclosed brick chamber without earth electrode shall be provided in the common underground earthing grid for convenience of taking earth conductors inside the plants.

8.1.7 As far as possible, the reinforcement rods inside concrete column shall be connected to the earthing grid/ring to reduce the overall earth resistance.

8.1.8 Individual electrical equipment shall be earthed by GI strip/GI wire/Cu/Alcable. Earth buses shall be provided in plants for earthing groups of electrical/non-electrical equipment to earthing grid/rings.

8.1.9 Size of earthing grid/ring and earth conductors of equipment for generating station and sub-stations shall be as per relevant standards. The fault current magnitude shall be decided based on system fault level. The time duration shall be taken as 1 second.

8.1.10 All equipment rated above 250 V shall have two external earth connections and those rated up to 250 V shall have one external earth connection. However, for lighting fixtures, earthing shall be provided through armouring of cables.

8.1.11 All steel structures, tanks, vessels, pipes, pipe joints, valves etc. shall be earthed against static charge accumulation by 50x6 mm GI strip. The no. of earth connections shall be as follows :

Equipment having diameter	**Hazardous area (If applicable)**	**Non hazardous area**
30 M	2	2
More than 30 M	3	2

8.1.12 Wherever process equipment are mounted on steel structures, the structures shall be earthed instead of earthing the individual equipment.

8.1.13 The pipe structures shall be earthed at not more than 25M apart.

8.1.14 For all equipment in hazardous area (if applicable), in addition to external earthing one internal earthing shall be provided.

8.1.15 Minimum sizes of earth Strip to be used shall be as given below. However, vendor to calculate the actual size:-

S.N.	Equipment	GI conductor size
1.	LV switch board, transformers	50mm×8mm
2.	Motors rated 75 KW and above	50mm×6mm
3.	Motors rated 30 KW to less than 75 KW	35mm×6mm
4.	Motors rated 5.5 KW to less than 30 KW	25mm×6mm
5.	Motors less than 5.5 KW	8 SWG
6.	All minor equipment rated 250V & below	10 SWG
7.	All non electrical equipment such as vessel, tanks, structures	50mm×6mm
8.	Lightning Down conductors	50mm×6mm

All GI strips shall meet the galvanizing requirement as per IS.

8.2 **LIGHTNING PROTECTION**

8.2.1 All structure shall be protected against lightning strikes by suitable lightning protection system to be designed and installed as per IS: 2309.

8.2.2 The number of down conductors shall be minimum two.

8.2.3 Bare metallic structures shall not have any air termination rods at the top. The earth connections shall be welded to the bottom of structure at 300 mm above floor level. However, tall metallic columns with insulation at top shall be provided with air termination rods.

8.2.4 Separate earth electrodes shall be provided for each down conductor of lightning protection. However, these shall be inter-connected with the other electrodes in main grid. Down conductor/earth connection sizes shall be 50 x 6 mm GI in all cases.

9.0 SPARES

9.1 Item wise unit prices of spares for two years operation & maintenance along with recommended quantity shall be quoted as per Doc. No. PC94-PNEL-ESPL.

9.2 Any other spare parts required, but not specified, shall also be offered.

9.3 Spares for commissioning as required shall be supplied without any extra cost.

10.0 TESTING & INSPECTION

10.1 All equipment shall be routine tested as per relevant Indian/International Standard /Specifications.

10.2 One of each type & rating of motor shall be tested for Heat run.

10.3 Acceptance test on representative length of cable of each size shall be carried out.

10.4 All the above mentioned tests shall be carried out in the presence of Owner's representative.

10.5 The Owner's inspection shall, however, not absolve the bidder from his responsibility for making good any defect which may be noticed subsequently. Despatch of material shall be subject to written consent of Owner or his representative.

11.0 INSTALLATION, TESTING AND COMMISSIONING

11.1 The bidder shall undertake installation of all electrical equipment in accordance withlatest code of practices, in conformity with recommendation of the respective equipment manufacturers, drawings approved by the owner or owner's representative, direction of engineer-in-charge, statutory regulations and to the entire satisfaction of the owner. Site test procedures shall be made and submitted to owner/consultant for approval.

11.2 The bidder shall arrange all the necessary erection tools and tackles, testing and measuring instruments and shall supply the required erection materials including structural steel.

11.3 The bidder shall furnish field inspection and test data sheets for all equipments for owner's approval.

11.4 The bidder shall obtain the necessary certificate of compliance/completion certificate with test results from statutory authorities as required. All necessary drawings and test certificates as required by them shall be furnished by the vendor.

11.5 At least following tests shall be specifically conducted before commissioning in presence of owner's representative. All the test results shall be recorded and submitted to the owner.

a) Insulation Test
b) Continuity Test
c) High Voltage Test
d) Simulation Test
e) Earth Resistance Test

12.0 DEVIATIONS

Deviations, if any from this standard (clause wise) shall be clearly indicated in the offer with reasons thereof. Deviations from the data indicated in Specification Sheet shall be shown clearly by encircling it and indicating the revised data in Specification Sheet. In the absence of any such activities the compliance to the clauses shall be deemed automatically.

13.0 BILL OF QUANTITY

The bidder shall furnish the Bill of quantity for all electrical items duly signed and stamped. Bill of quantity shall only be for our information. Actual quantity as required shall be supplied by the bidder.

14.0 DOCUMENTATION

Drawings & Documents shall be furnished as per enclosed Doc.No.PC94-PNEL-ED&D

.

ELECTRICAL DRAWINGS & DOCUMENTS

ELECTRICAL DRAWINGS AND DOCUMENTS

SL. No.	Description	Documents Required (Y / N)			
		With Bid	For approval	For Information	Final
1)	Specification Sheets, duly completed	N	Y	--	Y
2)	Technical Particulars of all equipment	N	Y	--	Y
3)	Load List indicating rated and absorbed power of loads and duty type (Continuous / Standby / Intermittent) at different voltages including emergency loads.	N	--	Y	Y
4)	Load Data indicating normal, peak, starting and construction power requirement at various voltage levels	N	--	Y	Y
5)	Single Line Diagram of each board including protection and metering details	N	Y	--	Y
6)	Feeder Details of all switch board	N	Y	--	Y
7)	Substation/MCC Room Equipment Layout	N	Y	--	Y
8)	Design calculations (for equipment sizing, earthing, lighting, cables, bus ducts, bus bar, load flow, short circuit, voltage drop during largest motor starting, relay setting calculation etc.)	N	Y	--	Y
9)	Specifications of all Electrical Equipment	N	Y	--	Y
10)	Cable rack/trench Layout of substation/MCC room	N	--	Y	Y
11)	Cable rack/trench Layout of plant	N	--	Y	Y
12)	Earthing& lightening protection Layout (Substation/MCC, Transformer shed, Cable celler, control room etc)	N	--	Y	Y
13)	Plant Earthing& lightening protection Layout	N	--	Y	Y
14)	Lighting Layout (Substation, MCC Room, Cable gallery, Transformer shed, Control Room etc)	N	--	Y	Y
15)	Plant Lighting Layout	N	--	Y	Y
16)	Cable Schedule	N	--	Y	Y
17)	Power Layout (Substation, MCC Room & Plant)	N	--	Y	Y
18)	Interconnection & terminal connection Diagram	N	--	Y	Y
19)	Schematic Diagrams of all control panel & switch board	N	Y	--	Y
20)	List of controls, interlocks, indication & metering at various locations for all drives	N	--	Y	Y
21)	General Arrangement Drawing of all equipment	N	--	Y	Y
22)	Foundation Plan indicating dimensions, floor opening, weight, clearance etc of all equipment	N	--	Y	Y
23)	Characteristic curves of Motor			--	
	a) Thermal withstand curve	N	--	Y	Y
	b) Load Vs FL current	N	--	Y	Y
	c) Load Vs Efficiency	N	--	Y	Y

	d) Load Vs Power factor	N	--	Y	Y
	e) Load Vs Speed	N	--	Y	Y
	f) Starting Current Vs Time	N	--	Y	Y
24)	Terminal Box Drawings (Motor)	N	Y	--	Y
25)	Characteristics curves for the charger and all other static and control devices, relays etc.	N	--	Y	Y
26)	Bill of Materials covering all electrical equipment and installation material	N	--	Y	Y
27)	Illustrative and Descriptive Literature	N	--	Y	Y
28)	Catalogue of brought out items/accessories	--	--	Y	Y
29)	Relay setting	N	-	Y	Y
30)	Installation, operation & maintenance manual	N	--	Y	Y
31)	Test certificates (Routine, Type & Acceptance)	N	*	--	Y
32)	Spare Parts List	Y	--	Y	Y
33)	Guarantee Certificates	N	*	--	Y
34)	Quality assurance plan	N	*	--	Y
35)	Hazardous area Classification Drawing	N	Y	--	Y
36)	Erection Drawings & Details	N	Y	--	Y
37)	Construction & Commissioning specification and procedure for all equipment.	N	--	Y	Y

Note:

1. Final documentations including approved documentation from statutory design verifying authority shall be supplied in hard copies (6 sets) as well as soft copies in CD formats. Applicable software is MS Office 2000, Word, Access, and Excel.
2. Bidder shall submit document in required number of sets as stated elsewhere in commercial part.
3. This list indicates the minimum drawings and documents requirements. However Bidder shall submit complete list of document & drawing schedule listing all drawings and documents to be submitted by them during the course of execution of the job. The schedule shall list all drawings and documents along with their number and expected date of submission.
4. Documents marked as * are to be approved by authorized inspection agency and statutory authorities as applicable.

   Y – Yes, N – No

ELECTRICAL SPARE PARTS LIST

SPARE PARTS FOR TWO YEARS OPERATION :

Contractor shall supply spare parts for Electrical Items as per list of spares for 2 years operation of the plant as detailed below:

S.N.	Items	QTY
1.0	**Spares for LT (415V) Switch Board of each rating**	
A.	Complete ACB	1 No.
B.	Components for ACB (of each rating) :	
i.	Main contact sets/ Jaw contact compete	1 Set
ii.	Arcing contact sets	1 Set
iii.	Trip coils	1 No.
iv.	Closing coils	1 No.
v.	Spring charging motors	1 No.
vi.	Arc chutes sets	1 Set
vii.	Limit switch	1 No.
viii.	Auxiliary Contactors	1 No.
C.	Protective relay of each type	1 No.
1.1	**Motor Duty Switch Rating**	
A.	16 A	1 No.
B.	32 A	1 No.
C.	63 A	1 No.
D.	125 A	1 No.
E.	200 A	1 No.
F.	250 A	1 No.
G.	400 A	1 No.
1.2	**HRC Fuses**	
A.	10 A	1 No.
B.	16 A	1 No.
C.	20 A	1 No.
D.	32 A	1 No.
E.	63 A	1 No.
F.	80 A	1 No.
G.	100 A	1 No.
H.	125 A	1 No.
I.	160 A	1 No.
J.	200 A	1 No.
1.3	**Contactors (AC-3 Type)**	
A.	16 A	1 No.
B.	32 A	1 No.
C.	70 A	1 No.
D.	110 A	1 No.
E.	200 A	1 No.
F.	315 A	1 No.
G.	400 A	1 No.
1.4	**Thermal Overload Relay**	
A.	Up to 1.1 KW motor rating	1 No.
B.	Above 1.1 KW to 3.7 KW motor rating	1 No.
C.	Above 3.7 KW to 7.5 KW motor rating	1 No.
D.	Above 7.5 KW to 15 KW motor rating	1 No.
E.	Above 15.0 KW to 30.0 KW motor rating	1 No.
F.	Above 30.0 KW to 55 KW motor rating	1 No.
G.	Above 55.0 KW to 75.0 KW motor rating	1 No.

H.	Above 75.0 KW to 110.0 KW motor rating	1 No.
I.	Above 110 KW to 150.0 KW motor rating	1 No.
1.5	**C.T. – Each Rating**	
A.	2 / 1 A	1 No.
B.	5 / 1 A	1 No.
C.	10 / 1 A	1 No.
D.	15 / 1 A	1 No.
E.	20 / 1 A	1 No.
F.	25 / 1 A	1 No.
G.	35 / 1 A	1 No.
H.	50 / 1 A	1 No.
I.	75 / 1 A	1 No.
J.	125 / 1 A	1 No.
K.	175 / 1 A	1 No.
L.	225 / 1 A	1 No.
M.	250/1 A	1 No.
1.6	**Multifunction Meters**	1 No.
1.7	**Ammeter with ammeter selector switch of each range**	1 No.
1.8	**Voltmeter with voltage Selector Switch of each range**	1 No
1.9	**MCB's of each rating**	1 No.
1.10	**Fuse Pullers**	1 No.
1.11	**Indicating Lamps Assembly Complete**	1No.
1.12	**110V DC Switches/Fuse Switch Units Each rating**	1 No.
1.13	**Push ButtonElement along with Actuator With 2 NO + 2 NC contacts**	1 No. of each colour
1.14	**Control Switches (each type)**	
A.	Trip-Neutral-Close control switch	1 No.
B.	Local remote selector switch	1 No.
C.	Thermostat	1 No.
1.15	**Miscellaneous**	
A.	Alarm bell (hotter)	1No.
B.	Alarm Buzzer	1 No.
2.0	**LV Motor (For each rating)**	
A.	Bearings (Driving end)	1 set
B.	Bearings (Non driving end)	1 set
C.	Cooling fan	1 No.
D.	Terminal block	1 No.
E.	Grease nipple & Plug (if installed)	1 No.
3.0	**LCS**	
A.	Auto-Off-Manual / Local-Remote switch of each type	1 No
B.	Ammeters of different ranges	1 No
C.	Push buttons of different types	1 set
D.	Indication lamps of different types	1 set

E.	Terminal block	1 no
4.0	**Interlocking Switch Socket & Plug**	
A.	Switch of each rating	1 No.
B.	Fuse base of each rating	1 No.
C.	Fuse of each rating	1 No.
D.	Plug Top	1 No.
5.0	**Junction box of each type**	1 no.
6.0	**VFD (if used in the system)**	
A.	Spare VFD module	1 no
B.	Electronic circuit board of each type	1 no.
C.	Power diodes	1 set
D.	SCRs	1 set
E.	Power transistors	1 set
F.	Set of fuses of all types & sizes used in system	5 Se t
7.0	**Lighting Fixtures**	
A.	Lighting fixtures (along with control gear)	10% of the total no. of fixtures (Minimum of 2 No's of each type).
B.	Lamp holder of each type	2 Nos. of each rating & type
C.	Ballast of each type	2 Nos
D.	Capacitor of each type	2 Nos
E.	Starter for fluorescent tubes	2 Nos
F.	Terminal block of each type	2 Nos
G.	Heat resistance toughened glass cover of each type	2 Nos
H.	MCB of each type	2 Nos
I.	ELCB of each type	2 Nos
J.	Fuse holder	2 Nos

NOTES:

1. Bidder shall recommend the spares based on their experience over and above listed above.
2. The Quantities indicated are only preliminary estimation, so the firm quantities will be specified later in conjunction with recommendations of EQUIPMENT vendors.
3. The quantities which shall be ordered by bidder shall be subject to approval of Owner/PMC.
4. Electrical equipment which has not been mentioned in this table and needs spare parts, bidder shall also consider spare parts for them, the quantities for such spare parts shall be subject to approval of Owner/PMC.

ELECTRICAL VENDOR LIST

ELECTRICAL

1.0 MV Switchboards (MCC /PMCC)		
i.	Larsen & Toubro Ltd. (El. Products Divn.)	India
ii.	Elecmech Corporation	India
iii.	ALSTOM Ltd (Areva T&D)	India
iv.	Siemens Ltd.	India
v.	Bhartia Industries Ltd. (Divn. BCH)	India
vi.	Cosmic power systems pvt. Ltd	India
vii.	Spaceage Switchgears Limited	India
viii.	Lotus Powergear Pvt. Ltd.	India
ix.	C & S Electric Ltd	India
x.	GE Power Controls India Pvt. Ltd.	India
xi.	Intrelec	India
xii.	Jakson Engineers Ltd.	India
xiii.	Venus Contros& Switchgear (P) Ltd.	India
xiv.	Anand Power Ltd. (Upto 1800 Amp)	India
xv.	Associated Switchgears & Projects Ltd.	India
xvi.	Controls & Schematics Pvt. Ltd.	India
xvii.	Crompton Greaves Ltd	India
xviii.	Reunion Electrical Manufactureres (P) Ltd.	India
xix.	Vidhyut Control (India) Pvt Ltd.	India
xx.	Spaceage Switchgears Limited	India
xxi.	Jasper Switchgears Limited	India
xxii.	Hindustan Control & Equipment Pvt.Ltd	India
xxiii.	Electric Supply & Services(P) Ltd	India
2.0 Floor Mounting Type Distribution Boards		
i.	Anand Power Ltd	India
ii.	Associated Switchgears & Projects Ltd	India
iii.	Automatic Controls Corpoation	India
iv.	Control & Schematics Pvt Ltd	India
v.	Cosmic Power System Pvt Ltd	india
vi.	Elemech Corporation	India
vii.	Electric Supply & Services(P) Ltd	India
viii.	GE Power Controls India Pvt Ltd	India
ix.	Globe Electrical Industries	India
x.	Hindustan Control & Equipment Pvt.Ltd	India
xi.	Interlec	India
xii.	Jasper Switchgears Limited	India
xiii.	Larsen & Toubro Ltd (El. Products divn)	India
xiv.	Lotus Powergear Pvt Ltd	India
xv.	Reunion Electrical Manufacturers (P) Ltd	India

xvi.	Siemens Ltd	India
xvii.	Spaceage Switchgears Limited	India
xviii.	Tricolite Electrical Industries Pvt. Ltd	India
xix.	Trident Switchgears Pvt Ltd (upto 3200A)	India
xx.	United Electric Co. (Delhi) Pvt. Ltd	India
xxi.	Universal Industrial Products	India
xxii.	Vidhyut Control (India) Pvt Ltd	India
3.0 Wall Mounting Type Distribution Boards		
i.	Adhunik Switchgears(P) Ltd	India
ii.	Anand Power Ltd	India
iii.	Associated Switchgears & Projects Ltd	India
iv.	Automatic Controls Corpoation	India
v.	Control & Schematics Pvt Ltd	India
vi.	C& S Electric Ltd	India
vii.	Elemech Corporation	India
viii.	Globe Electrical Industries	India
ix.	Havell's India Ltd	India
x.	Hindustan Control & Equipment Pvt.Ltd	India
xi.	Indiana Current Control Ltd	India
xii.	Indo Asian Fusegear Ltd	India
xiii.	Interlec	India
xiv.	Legrand India Ltd	India
xv.	Lotus Powergear Pvt Ltd	India
xvi.	Reunion Electrical Manufacturers (P) Ltd	India
xvii.	Standard Electricals Ltd	India
xviii.	Tricolite Electrical Industries Pvt. Ltd	India
xix.	Trident Switchgears Pvt. Ltd	india
4.0 Medium Voltage Induction Motors		
i.	Asea Brown Boveri Ltd.	India
ii.	Crompton Greaves Ltd.	India
iii.	Siemens Ltd.	India
iv.	ELGI Electric Industries Ltd	India
v.	Alstom Limited (Areva T & D)	India
5.0 Medium Voltage Flame Proof / Increased Safety Motors		
i.	Asea Brown Boveri Ltd.	India
ii.	Crompton Greaves Ltd.	India
iii.	Bharat Bijlee Ltd.	India
6.0 Hose Proof Local Control Station		
i.	Baliga Lighting Equipments Limited	India
ii.	Flameproof Equipments Pvt. Limited	India
iii.	FCG Power Industries Ltd.	India
iv.	FCG Flameproof Control Gears Pvt. Ltd.	India
v.	BhartiaIndusttries Ltd. (Divn. BCH)	India
vi.	Hotline Switchegear& Controls	India
vii.	Power Engg. Co.	India
7.0 MV Ex.proof items(Switches/Sw.Skt/Plugs/Isolators/JB/LCS/DB)		
i.	FCG Flameproof Control Gears Pvt. Ltd.	India
ii.	Baliga Lighting Equipments Ltd.	India
iii.	FCG Power Industries Ltd.	India
iv.	Sudhir Switchgears Pvt. Ltd.	India
v.	Flameproof Equipments Pvt. Ltd.	India
vi.	FlexproElectricasPvt Ltd	India

vii.	Prompt Engineering Works	India
8.0 Industrial Type Sw.Socket& Plug		
i.	Baliga Lighting Equipments Limited	India
ii.	Caldyne Automatics Ltd.	India
iii.	Crompton Greaves Ltd.	India
iv.	Cyclo Electric Devices & Services Co.	India
v.	FCG Flameproof Control Gears Pvt. Ltd.	India
vi.	FCG Power Industries Ltd.	India
vii.	Flameproof Equipments Pvt. Ltd.	India
viii.	Legrand India Ltd.	India
9.0 LT Power Cables		
i.	Cable Corporation of India Ltd.	India
ii.	KEC International Ltd.(Formerly RPG Cables Limited)	India
iii.	Delton Cables Ltd.	India
iv.	Finolex Cables Ltd.	India
v.	KEI Industries Ltd.	India
vi.	Torrent Cables Limited	India
vii.	Radiant Cables Pvt. Limited	India
viii.	Industrial Cables (I) Limited	India
ix.	NICCO Corporation Limited	India
x.	Universal Cables Ltd.	India
xi.	Cords Cable Industries Ltd.	India
xii.	Paragon Cables	India
xiii.	Krishna Electrical Industries Ltd.	India
xiv.	Alpha Communication Limited	India
xv.	Grandlay Electricals India	India
xvi.	J K Cables Limited	India
xvii.	Omega Cables Limited	India
xviii.	T C Communication Pvt. Ltd.	India
10.0 Control Cables		
i.	Cable Corporation of India Ltd.	India
ii.	KEC International Ltd.(FormerlyRPG Cables Limited)	India
iii.	Delton Cables Ltd.	India
iv.	Finolex Cables Ltd.	India
v.	KEI Industries Ltd.	India
vi.	Cords Cable Industries Ltd.	India
vii.	Radiant Cables Pvt. Limited	India
viii.	NICCO Corporation Limited	India
ix.	Universal Cables Ltd.	India
x.	Paragon Cables	India
xi.	Krishna Electrical Industries Ltd.	India
xii.	Alpha Communication Limited	India
xiii.	Bhansali Cables & Conductor Pvt. Ltd	India
xiv.	Grandlay Electricals India	India
xv.	J K Cables limited	India
xvi.	Omega Cables Limited	India
xvii.	Suyog Electricals Ltd.	India
xviii.	T C Communication Pvt. Ltd.	India
xix.	Torrent Cables Limited	India
11.0 Hose Proof Industrial Lighting Fixtures		
i.	Bajaj Electricals Ltd.	India

ii.	Philips India Ltd.	India
iii.	Crompton Greaves	India
iv.	Surya Roshni Ltd.	India
v.	Wipro Lighting	India
12.0 Street/Flood Lighting Fixtures		
i.	Philips India Ltd.	India
ii.	Bajaj Electricals Ltd.	India
iii.	Crompton Greaves	India
iv.	Surya Roshni Ltd.	India
v.	Wipro Lighting	India
vi.	Havell's India Ltd.	India
13.0 AC Variable Frequency Drive		
i.	Asea Brown Boveri Ltd.	India
ii.	Siemens Ltd.	India
iii.	Rockwell Automatic India Ltd.	India
14.0 Epoxy Based Termination/Straight Through Jointing Kits		
i.	Cable Corpn. Of india	India
ii.	Raychem RPG Ltd.	India
15.0 Pre Fabricated (Al/GI) Cable Trays		
i.	Globe Electrical Industries	India
ii.	Indiana Engg Works Pvt Ltd	India
iii.	Metalite Industries,	India
iv.	Parekh Engineering Company	India
v.	Sadhana Engineering Corporation	India
vi.	Steelite Engineering Limited	India
16.0 FRP Cable Trays		
i.	Kemrock Industries & Exports Ltd.	India
ii.	Satyam Industries	India
iii.	Sintex Industries Ltd.	India
iv.	Sumip Composites Pvt.Ltd.	India
17.0 Microprocessor/Numerical relay		
i.	Alstom Ltd(Areva T & D)	India
ii.	L&T Ltd.	India
iii.	Siemens Ltd	India
18.0 Earthing & Lightning Protection Material – (Al/GI) Wire/Strip		
i.	Anand Electric Trading Co.	India
ii.	Bharti Exports	India
iii.	C & S Electric Ltd.	India
iv.	Jayant Metal Mfg. Co.	India
v.	Metalite Industries	India
vi.	Premier Power Products (Calcutta) Pvt. Ltd.	India
vii.	Jamna Metal Company	India
viii.	Mahavir Industrial Corporation	India
ix.	Metropolitan Industries	India
x.	Rukmini Electricals & Components Pvt. Ltd.	India
xi.	Sadhana Engineering Corporation	India
xii.	Sai Galvanisers& Fabricators Pvt Ltd	India
xiii.	StealiteEngg Co	India
19.0 MV Current Transformer		
i.	Alstom Ltd(Areva T & D)	India
ii.	Indcoil Transformers Pvt Ltd	India
iii.	Kappa Electrical	India
iv.	Seimens Ltd	india

20.0 MV Potential Transformer		
i.	Alstom Ltd(Areva T & D)	India
ii.	Indcoil Transformers Pvt Ltd	India
iii.	Kalpa Electrical Pvt Ltd	India
iv.	Kappa Electrical	India
v.	Seimens Ltd	india
vi.	Larsen & Toubro Ltd	India
21.0 Hoseproof Junction Boxes		
i.	Bhartia Industries Ltd. (Divn. BCH)	India
ii.	FCG Flameproof Control Gears Pvt. Ltd.	India
iii.	FCG Power Industries Ltd.	India
iv.	Flameproof Equipments Pvt. Ltd.	India
v.	Baliga Lighting Equipments Limited	India
22.0 LV ACBs (AIR CIRCUIT BREAKERS, 415 VOLT AC)		
i.	L&T Ltd	India
ii.	Siemns Ltd.	India
iii.	Space Switchgear Limited	India
iv.	GE Power Controls India Pvt. Ltd.	India
23.0 CABLE GLANDS & LUGS		
i.	DOWELL	India
ii.	Baliga Lighting Equipments Limited	India
iii.	FCG Fflameproof Control Gears Pvt.Ltd.	India
iv.	Flameproof Equipments Pvt. Ltd.	India
v.	Flexpro Electricals Pvt. Ltd.	India
vi.	Sudhir Switchgear Pvt. Ltd	India
24.0 BATTERY CHARGER		
i.	Chhabi Electricals Pvt.Ltd.	India
ii.	AMCO Power System Ltd.	India
iii.	Universal Industrial Products	India
iv.	CaldyneAutomatics.Ltd	India
v.	Dubas Engineering Pvt. Ltd.	India
vi.	HBL NIFE Power Systems	India
vii.	Kerala State Electronics Dev.Corpn.Ltd.	India
25.0 BATTERY (Ni-Cd/Lead-Acid)		
i.	AMCO Power System Ltd.	India
ii.	HBL NIFE Power Systems	India
iii.	Amara Raja Batteries Ltd	India
iv.	Exide Industries Limited	India

CLIENT:M/s **PROJECT**: PMC SERVICES FOR CDP-PS **PLANT:** CETP

ISSUED FOR : PROPOSAL ☐ ENQUIRY ☒ ORDER ☐ FINAL ☐

GENERAL		**AMBIENT CONDITION**	
Encl. Docs. : ☐		Temp. Max./Min./Design Ref.	
Make : As per Vendor list for Electrical items attached with bid		Relative Humidity:	Alt. above Sea Level
Vendor Ref. No. :		**Atmospheric Pollution**	Dusts :
Std: IS/IEC			Vapours :

TESTS: Routine ☒ Type ☐ Acceptance ☒ Others ☐

Type Tests Certificate of Similar Cable : Required ☒ Not required ☐

BASIC DATA		
Item No.		
Ref. Stds.		
Voltage Grade		11 KV (UE) / 3.3 KV (UE) / 1.1 KV
System Earthing		Resistance Earthed /Solidly Grounded
CONDUCTOR	Material	Aluminium / Copper
	Construction	Stranded
Insulation Type		PVC
Inner Sheath Type		Extruded PVC
CONDUCTOR SCREEN	Required	For 11 KV grade cable
	Not Required	
Material of Conductor Screen		
ARMOURING	Required	Required
	Material	
	No. of Layers	
Outer Sheath Type		Extruded PVC type(ST-2)
Special Requirements		Outer sheath FRLS
Drum Material		

BILL OF QUANTITY

Item No.	No. of Core & Cross-Sectional Area in Sq. mm.	Qty. in M.	Preferred Drum Length	Remarks

PDIL		PROJECTS & DEVELOPMENT INDIA LTD COMMON EFFLUENT TREATMENT FACILITY FOR CPIIUC AT SIDCO PHARMACEUTICAL COMPLEX, ALATHUR, TAMILNADU **TECHNICAL SPECIFICATIONS** **ELECTRICAL WORKS & SPECIFICATIONS**	**PC94-CPIIUC-CETP-E1-EL** **DOCUMENT NO**	**0** **REV**

CLIENT:M/s . **PROJECT**:PMC SERVICES FOR CDP-PS **PLANT: C**ETP

ISSUED FOR : PROPOSAL ☐ ENQUIRY ☒ ORDER ☐ FINAL ☐

GENERAL

Item No. :	Ref. Stds. : IS/IEC
Quantity :	Encl. Docs. : PC94-PNEL-TS-IM ☒
Description : 3 Phase Induction motor	Make: As per Vendor list for Electrical items attached with bid
Code No. :	Maker's Type. :

TESTS: Routine ☒ Type ☒ Others ☐

SERVICE CONDITIONS

SYSTEM DETAILS		**AMBIENT CONDITION**		
Rated Voltage with ± % : 11KV/3.3KV/415V ± 10 %		Temp. Max./Min./Design Ref.		
No. of phases : : 3 phase		Relative Humidity :		Alt. above sea :
Rated Frequency With ± % :50 Hz ± 5 %		**Atmospheric Pollution**	Dusts :	
Combined V & F variation : ± 10 %			Vapours :	
Fault Level : 750 MVA for 3sec. at 11KV 150 MVA for 3sec. at 3.3KV 31 MVA for 1sec. at 415V		**Area***	Safe ☐	Hazardous ☐
Space Heater Supply : 240 V AC		**Haz. Area class :**		
Low Voltage Heating Supply :		**Location** : Indoor ☐		Outdoor ☐
INSTRUMENT CONTACT RATING	A.C. :	**COOLING WATER**		
	D.C. :	Inlet Press. : kg/sq.m .		Inlet Temp. °C
Aux. Motor Supply :		Fauling Factor :		Outlet Temp. °C

BASIC DATA

RATING & DUTY	**DRIVEN M/C DATA**
Rated Output :	Type :
Syn. Speed :	Make :
Duty : Continuous/Intermittent / Standby	Absorbed Power :
Rotor Type :Squirrel Cage	Coupling :
Starting Method :D.O.L.	Torque-Starting / Max. :
Max I Start/I Rated: refer clause no. 5.1.3 to 5.1.4 of Doc No. PC94-PNEL-TS-IM	GD^2 at Motor Speed :
Min. V Start at Terms :80 %	Thrust - Radial / Axial :
Min. Starting Torque at V_R :	Addl. Data :

EXECUTION	**ACCESSORIES**			
Degree of Protection : IP 55	Foundation Bolt ☒		Space Heater ☒(See note-1)	
Addl. Degree of Protection :	Lifting Eye Bolt ☒		Drain Plug ☒	
Mounting Arrangement :	Cable Glands ☒		Cable Lugs ☒	
Direction of Rotation :	Diff. C.T.s ☐		C.W. Flow Indicator ☐	
Insulation Class: F temp. Rise limited to class B insulation	**RTDs(HV motors)**	Wdgs. ☒	Hot Air ☐	Bearings ☒
Cooling Method :Refer clause no. 4.2 of Doc. No. PC90-PNEL-TS-IM	**Thermometer (HV motors)**		Hot Air ☐	Bearings ☒
Stator Connection : Star/Delta	**Earthing Terminals**		On Body ☒	In T.B. ☒
CABLING DATA	Name Plate : ☒		Addl. name plate : ☐	
Power cable :	Rain Protecting Hood : ☒		Thermistor ☐	
Heater cable :	**SPARE PARTS (Also refer spare list attached with ITB)**			
C.T. cable :	Required ☒		For Period of 2 Years	
R.T.D. cable :	Bearings ☒		Cooling Fan ☒	
Alarm cable :	1 Sample Stator Coil : ☐			
CABLE GLAND Type :Double Compression	Grease Nipple & Plug : ☒			
CABLE GLAND Material : Aluminium	Terminal Block ☒			

PAINTING

Type :Epoxy based

Shade : 631 of IS : 5

Note: 1) Motor of rating 30kw and above shall be provided with space heater.

.

*Bidder shall select as per area classification.

CLIENT:M/s	**PROJECT**: PMC SERVICES FOR CDP-PS		**PLANT:** CETP
ISSUED FOR :	PROPOSAL ☐	ENQUIRY ☒	ORDER ☐ FINAL ☐
GENERAL			
Ref. Stds. :			
Encl. Docs. : ☐			
Make:As per Vendor list for Electrical items attached with bid			
Maker's Type :			
Sample Reqd. :	Yes ☒	No ☐	
TESTS:	Routine ☒	Type ☐	Others ☐
AMBIENT CONDITION			
Temp. Max./Min./Design Ref.			
Relative Humidity:		Alt. above sea :	
ATMOSPHERIC POLLUTION	Dusts : Corrosive dust		
	Vapours : Acid fumes, abrasive & corrosive		
AREA*	Safe ☐		Hazardous ☐
HAZARDOUS AREA CLASS	Zone :		Encl. Gr. :
	Temp. Class :		
LOCATION	Indoor ☐		Outdoor ☒

BASIC DATA		
Item No.		
Quantity		
Rated Voltage & Frequency		415 V/240V ± 10 %, 50 Hz ± 5 %
Rated Current		63A/125 A / 15 A
No. of Phases & Pins		3 /1 Phases, 5/3 Pins
Degree of Protection		IPW-55
Addl. Degree of Protection		
CABLE SIZE	Supply	
	Plug	
Period for which Spares required		

MAKE OF COMPONENTS	
SWITCH :	As per Vendor list for Electrical items attached with bid
FUSE:	As per Vendor list for Electrical items attached with bid
SOCKETS :	As per Electrical Vendor List attached with the bid.
PLUG :	As per Electrical Vendor List attached with the bid.

CABLE GLANDS :	As per Vendor list for Electrical items attached with bid
ERMINAL BLOCKS :	As per Vendor list for Electrical items attached with bid

Note: ***Bidder shall select as per area classification.**

CLIENT:M/s		**PROJECT**: PMC SERVICES FOR CDP-PS			**PLANT:** CETP
ISSUED FOR : PROPOSAL ☐	ENQUIRY ☒	ORDER ☐	FINAL ☐		
GENERAL			**AMBIENT CONDITION**		
Ref. Stds. : IS/IEC			Temp. Max./Min./Design Ref.		
Encl. Docs. : ☐			Relative Humidity:	Alt. above sea :	
Make: As per Vendor list for Electrical items attached with bid			**Atmospheric Pollution**	Dusts:	
Vendor Ref. No. :				Vapours:	
			Area *	Safe : ☐ Hazardous : ☐	
Sample : Reqd. : ☐ Not Reqd. : ☐			**Hazardous Area**	Zone : Encl. Gr. :	
Tests :	Routine : ☒ Type : ☐ Others: ☐			Temp. Cl.	
			Location :	Indoor ☐ Outdoor ☒	

BASIC DATA

Item No.		
Quantity		
Rated Control Voltage with + %		240 V ± 10 % AC / 110V± 10 % DC
Rated Frequency with +		50 Hz ± 5 %
Enclosure for Hazardous Area		
PUSH BUTTON	Start	YES
	Stop	YES
	Reverse	
	Forward	
CONTROL SWITCH	TNC	
	Local / remote	YES
	OFF / AUTO / ON	
	Auto / Manual	
INDICATION LAMP	ON	YES
	OFF	YES
	Ready for Service	YES(for breaker controlled motor feeder)
	Space Heater ON	YES(for motor rating more than 30KW)
	C.B. tripped	YES(for breaker controlled motor feeder)
METERS	Ammeter	
	Range	
	C.T. Sec. Current	
RAIN HOOD	Reqd.	YES
	Not Reqd.	
Control Cable Size PVCAPVC (Cu)		
Painting Type & Shade		
Period For which Spares Reqd.		2 Years operation and maintenance

MAKE OF COMPONENTS

Push Buttons	As per Vendor list for Electrical items attached with bid
TNC Switches	
Other Control Switch	
Ammeter	As per Vendor list for Electrical items attached with bid

CLIENT:M/s			**PROJECT**: PMC SERVICES FOR CDP-PS			**PLANT:** CETP
ISSUED FOR : PROPOSAL ☐			ENQUIRY ☒		ORDER ☐	FINAL ☐
Indication Lamp						
Cable Gland			As per Vendor list for Electrical items attached with bid			
Terminal Box			As per Vendor list for Electrical items attached with bid			
Details of Local Control Stations						
Sl.No.	**ITEM NO.**	**CODE NO.**	**DESCRIPTION**	**IFL**	**C.T. Ratio**	**Remarks**

Note: ***Bidder shall select as per area classification.**

CLIENT:M/s			**PROJECT**: PMC SERVICES FOR CDP-PS			**PLANT:** CETP
ISSUED FOR : PROPOSAL ☐			ENQUIRY ☒		ORDER ☐	FINAL ☐
GENERAL						
Ref. Stds. : IS/IEC						
Encl. Docs. : ☐			SLD ☐			
Make: As per vendor list for Electrical items attached with bid						
Maker Ref. No. :						
AMBIENT CONDITION						
Max/Min/Design Ref.						
Relative Humidity			Alt. above sea :			
Atmospheric Pollution	Dusts :					
	Vapours :					
Area *	Safe ☐		Hazardous ☐			
Hazardous Area Class						
Location : Indoor ☒			Outdoor ☒			
TESTS TO BE WITNESSED : Routine ☒			Type ☐		Others ☐	
SYSTEM DETAILS						
Nominal Voltage with ± %. : 415 V ± 10 %						
Rated Frequency with ± %. : 50 Hz ± 5 %						
Combined V & F Variation : ± 10 %						
No. of Phases & Wires : 3 Ph, 4 Wire						
BASIC DATA						
Item No. :						
Quantity :						
Description :						
Code No.						
Type as per Sheet No. :						
Degree of Protection :						
Addl. Degree of Protection :						
CABLE TYPE & SIZE	Incoming (Al)					
	Outgoing (Cu)					
Painting Type & Shade :						
Period for which Spares required:						

MAKE OF COMPONENTS
SWITCH : As per enclosed vendor list
M.C.B.: As per enclosed vendor list
CABLE GLANDS : As per enclosed vendor list
TERMINAL BLOCKS : As per enclosed vendor list
ELCB : As per enclosed vendor list

Note:. *****Bidder shall select as per area classification.

CLIENT:M/s.	**PROJECT**: PMC SERVICES FOR CDP-PS				**PLANT:** CETP	
ISSUED FOR :	PROPOSAL ☐	ENQUIRY ☒	ORDER ☐	FINAL ☐		
GENERAL			**AMBIENT CONDITION**			
Ref. Stds. : IS/IEC			Temp.- Max./Min./Design Ref. :			
Encl. Docs. : PC94-PNEL-TS-MBSV			Rel. Humidity:		Alt. above Sea	
Make: As per vendor list for Electrical items attached with bid			**Atmospheric Pollution**	Dusts :		
Maker's Type :				Vapours :		
			Location	Indoor ☒	Outdoor ☐	
				Gr. Floor ☐	1st floor ☒	
Addl. Scope :	Incoming Bus Duct ☐		Tie Bus Duct ☐			
	Erection & Comm. ☒		Supervision of ErectionComm. ☐			
TESTS:	Routine ☒		Type ☐		Others ☐	

BASIC DATA

TAG NO. & QTY.	Item No.		
	Description		415V Switch Board
	Code No.		
REFERENCE DRAWINGS	Single Line Diagram		
	Feeder Details		
	Auto Trip Alarm Scheme		
	Non Trip Alarm Scheme		
	Trip Ckt. Supervision Scheme		
	Auto C/O Scheme		
	P.T. Bus Arrangement		
SYSTEM DETAILS	Nominal Voltage with Variation		415 V ± 10 %
	Rated Frequency with Variation		50 Hz ± 5 %
	Combined V & F Variation		± 10 %
	No. of Phases & Wires		3 Phase, 4 Wire
	Insulation Level		
	Fault Level		
	Earthing Mode		System Neutral Solidly Earthed
BUS BARS	**Rating**	Continuous	
		Short Time for 1 sec.	
	Bare / Insulated		Insulated
	Type of Insulation		PVC Sleeved
EXECUTION	**Breaker Feeders**	I/C B& B/C: ST/DT	
		Others : ST/DT	
	Other Feeders	Single front / Double front	
		Fixed / Drawout	FIXED
	Cable Entry : Top / Bottom		Bottom
	Bus Duct Entry : Top / Bottom		
	Accessibility : Front / Back		Front

CONTROL SUPPLY	Breaker	Closing & Indication	110 V DC ± 5%, 2 Wire
	Feeders	Tripping	110 V DC ± 5%, 2 Wire
	Contactors		240 V AC ± 10% 1 Ph, 2 Wire
	Space Heater		240 V AC ± 10% 1 Ph, 2 Wire
MISC. DATA	**Painting**	Type	Epoxy based
		Shade	
	Period for which Spares required		2 Years operation & maintenance

ST- SINGLE TIER,
DT- DOUBLE TIER

CLIENT :		PROJECT :	PLANT :
ISSUED FOR :	PROPOSAL ☐	ENQUIRY ☐	ORDER ☐ FINAL ☐
GENERAL			
Make			
Ref. Standard			
Item No.			
Voltage Grade			
Suitable For Earthed / Unearthed System			
No. of Cores & Size of Conductor			
CONSTRUCTIONAL DETAILS			
CONDUCTOR	Material		
	Construction		
	No. &Dia of wires per Core		
CONDUCTOR SCREEN	Material		
	Thickness		
INSULATION	Material		
	Thickness		
	Core Identification Method		
INSULATION SCREEN	Material		
	Thickness		
INNER SHEATH	Type & Material		
	Thickness		
ARMOURING	Type & Material		
	Dia of Wire / Strip Thickness		
OUTER SHEATH	Material		
	Thickness		
ELECTRICAL DATA			
CONTINUOUS CURRENT RATING WHEN LAID IN	Ground At 30^0 C		
	Air At 40^0 C		
Short Circuit Current For 1 sec.			
CONDUCTOR TEMP.	Continuous		
	Short Time		
Resistance At Operating Temp. (Ohm / KM)			
Reactance At 50 C/S (Ohm/KM)			
Capacitance (F/Km)			
Insulation Resistance			
Polarisation Index			
DERATING FACTOR	Temperature		

CHART ATTACHED FOR	Grouping	
	Exposure to Sun	
MECHANICAL DATA		
DIAMETER WITH TOLERANCE	Over Inner Sheath	
	Over Armour	
	Overall	
Weight Of Cables Per KM		
Minimum Bending Radius		
Maximum Pulling Tension		
Standard Drum Length		
Tolerance On Drum Length		

CLIENT :	PROJECT :	PLANT :
ISSUED FOR : PROPOSAL ☐	ENQUIRY ☐	ORDER ☐ FINAL ☐
GENERAL		
Item No.		
Quantity		
Description		
Code No.		
Ref. Standard		
Make		
Maker's Type		
ELECTRICAL DATA		
Rated Output		
Rated Voltage		
No. of Starts - Hot / Cold		
Torque - Starting / Pull Up / Pull Out		
Starting Time at min. V Start (Hot / Cold)		
Safe Stall Time at V_R / $1.1V_R$		
Stator Time Constant		
Temp. Rise at Full Load - Wdg. / Hot Air / Brg.		
TEMP. RISE OF STATOR / ROTOR AFTER 3 Starts From Cold		
2 Starts From Hot		
Current at FL / 0.85 FL		
Efficiency at FL / 0.85 FL		
Speed at FL / 0.85 FL		
Power Factor at FL / 0.85 FL / Start		
Push Pull Voltage withstand Capacity		
Max. V dip for 1 sec. / 10 sec. / 60 sec.		
Losses - Fixed / Copper / Total		
Space Heater Rating		
Suitable for Low Voltage Heating		
C.T. Ratio & Accuracy Class		
C.T. V_K &Imag. at V_K / 2		
Heating Time Constant		
Cooling Time Constant		
MECHANICAL DATA		
Frame Size / Ref. Dimensional Drg.		
Weight - Stator / Rotor / Total		
Heaviest Weight to be Lifted		
Rotor GD^2 in Kgm^2		
REACTION AT SUPPORTS FOR S/C Condition		
Starting Condition		
Running Condition		
Push Pull Condition		
Max. Vibration Limit		
Max. Noise Level		
Suitable for Outdoor Use	Yes ☐	No ☐
Suitable for Bi-directional Rotation	Yes ☐	No ☐
Material of Insulation		
Treatment of Insulation		

Winding Coils Replaceable at Site		
Type & Material of Fan		
Material & Thickness of Cooler Tube		
Cooling Water Required in M^3 / hr		
Lubrication Type		
Lubricant Specn.		
Interval of Lubrication		
BEARING NOS. & TYPE	DE	
	NDE	
	GUIDE	
On Line Lubrication		
Type & Rating of Main Cable Box		
No. of Cable Glands in Control Cable Box		

CLIENT: PROJECT: PLANT :

ISSUED FOR : PROPOSAL ☐ ENQUIRY ☐ ORDER ☐ FINAL ☐

GENERAL		
Make & Maker's Type		
Material & Thickness of Enclosure		
Gasketing Materials		
Material of Ext. Hardwares≤ 8mm / > 8mm		
Cable glands Type & Material		
Painting	Pre treatment	
	Shade	
Dimensional Drawing Reference No.		
Weight of Switch Socket / Plug		
SWITCH		
Make & Maker's Type		
Reference Standards		
Rated Current		
Utilisation Category		
FUSE		
Make & Maker's Type		
Reference Standards		
Rated Current		
SOCKET		
Make & Maker's Type		
Reference Standards		
Rated Current		
PLUG		
Make & Maker's Type		
Reference Standards		
Rated Current		

CLIENT :	PROJECT :	PLANT :
ISSUED FOR : PROPOSAL ☐	ENQUIRY ☐	ORDER ☐ FINAL ☐
GENERAL		
Item No.		
Type of LCS		
Make		
Maker's Type		
CONSTRUCTIONAL FEATURES		
Material of Construction		
Thickness of Enclosure		
IP Class of Enclosure		
Mounting Arrangement		
Door hinged or not		
Gasketing Material		
External Hardwares		
Rainhood reqd. or not		
Component Mounting	On Door	
	On Base Plate	
Provision of Padlocking provided with		
Dimensions LxBxH / Dimensional Drg. Ref. No.		
Type Test Certificate No.		
WIRING	Wiring Material & Size	
	External Cable Size	
PUSH BUTTONS		
Make & Maker's Type		
Ref. Standards		
Operating Principle		
Rated Voltage		
No. of Contacts N.O. / N.C.		
Contact Rating (V / A)		
AMMETER		
Make & Maker's Type		
Ref. Standards		
Rated Current / VA		
Accuracy Class		
Scale Band		
Size		
CONTROL SWITCHES		
Make & Maker's Type		
Ref. Standards		
Rated Voltage		
No. of Contacts N.O. / N.C.		
Contact Rating (V / A)		
Utilization Category		
INDICATION LAMPS		
Make & Maker's Type		
Ref. Standards		
Rated Voltage / Watts		
Type of Holder		
Safety Resistor		
CABLE GLANDS		
Material		
Type		
TERMINAL BLOCK		
Make		
Type		
Current Rating		

CLIENT:	PROJECT:	PLANT :
ISSUED FOR : PROPOSAL ☐	ENQUIRY ☐	ORDER ☐ FINAL ☐
GENERAL		
Item No. :		
Quantity :		
Description :		
Code No.		
Ref. Stds. :		
Make :		
Maker's Type:		
BASIC DATA		
Material & Thickness of Enclosure		
Gasketing Material		
COVER TYPE	Internal :	
	External :	
PAINTING	Pre treatment	
	Shade	
Material of Ext. Hardware ≤ 8mm / > 8mm		
Dimensional Drawing Reference No. :		
Weight :		
COMPONENTS		
M.C.B.	Make & Maker's Type	
	Reference Standards	
	Category of Duty :	
	Rated Current :	
	No. of Poles :	
	Type of Neutral :	
TERMINAL BLOCK	Make & Type	
	Rated Current	
CABLE GLAND	Type :	
	Material :	
E.L.C.B.	Make & Maker's Type	
	Reference Standards	
	Category of Duty :	
	Sensitivity :	
	Rated Current :	
	No. of Poles :	
	Type of Neutral :	

CLIENT :	PROJECT : PLANT :
ISSUED FOR :	PROPOSAL ☐ ENQUIRY ☐ ORDER ☐ FINAL ☐

GENERAL		
Manufacturer's Type		
Ref. Standards		
Rated Operational Voltage with ± %		
Rated Insulation Voltage		
Rated Voltage of Aux. Circuits with ± %		
Rated Current		
Short Circuit Rating		
Degree of Protection of Enclosure		
Service Conditions : Indoor / Outdoor		
DRAWOUT FACILITIES	Circuit Breakers	
	P.Ts.	
	Motor Starters	
	Protective Relays	
	Meters	
SINGLE FRONT / DOUBLE FRONT	C.B. Feeders	
	Other Feeders	
Cable Entry : Top / Bottom		
Accessibility : Front / Back		
MAXIMUM NOS. OF FEEDERS IN ONE PANEL	Circuit Breakers	
	Motor Starters	
	Switch Fuse	
SHEET STEEL TYPE & THICKNESS	Load Bearing member	
	Non Load Bearing member	
	Base Channel	
Material of Gaskets		
Material of External Hardware		
Operating Height : Max. / Min.		
Space Heater Rating of each Panel		
PAINTING	Method of Pre-treatment	
	Type	
	Thickness of Paint	
	Finishing Shade	
Dimensions : L X B X H / Dim. Drg. Ref. No.		
Shipping Dimensions of Largest Package		
Weight : Static / Dynamic		
BUS - BARS		
Material		
SIZE	HBB : Phase / Neutral	
	VBB : Phase / Neutral	
	Ground	
	Supporting Calculations Attached	
MINIMUM CLEARANCE	Between Phases	
	Between Phase & Earth	
Minimum Creepage Distance		
Current Rating : Continuous / Short Time		
Temp. Rise for : Cont. Load / Short Time Current		
SUPPORT	Material	
	BIL	
	Arrangement :Separate/Common	

Material of Bus-bar Insulation		
Shrouding Material for Joints		
No. & Type of Bolts		
CLIENT : PROJECT : PLANT :		
ISSUED FOR : PROPOSAL ☐ ENQUIRY ☐ ORDER ☐ FINAL ☐		
CIRCUIT BREAKERS		
Make		
Maker's Type		
Ref. Standards		
Type of Circuit Breaker		
Short Circuit Category		
Maximum Operating Voltage		
No. of Poles		
CURRENT RATING	Continuous	
	1 second RMS	
	Momentary (kA Peak)	
BREAKING CURRENT	Symmetrical KA	
	Asymmetrical KA	
	Sym. MVA at Rated Voltage	
Making Current (Peak)		
INSULATION LEVEL	1 Min. PF withstand Voltage	
	Impulse withstand Voltage	
No. of Breaks per Pole		
TYPE AND MATERIAL OF	Main Contacts	
	Arcing Contacts	
Contact Pressure		
Type of Closing Mechanism		
Type of Tripping Mechanism		
Type of Arc Control Device		
Arc Pumping Features with Details		
Trip Free Features with Details		
Total Closing Time		
Interrupting Time at 10%, 50%, 100% of rated Interrupting Capacity	Total	
	Arcing Time	
SPRING CHARGING MOTOR	Rating	
	Voltage	
	Insulation	
	Duty	
Spring Charging Time		
CONTROL VOLTAGE WITH RANGE	Closing	
	Tripping	
	Alarm and Indication	
POWER/ CURRENT REQUIRED FOR	Closing	
	Tripping	
AUXILIARY CONTACTS	No. of Spare Contacts : NO / NC	
	Contact Rating : AC / DC	
	Convertible : Yes / No	
Net Weight of Breaker		
Type Testing Authority & Test Report Ref. No.		
CURRENT TRANSFORMERS		
Make / Maker's Type		
Ref. Standard		
Type of Primary Winding		
Ratio		
Rated Burden		

Accuracy Class		
ALF / ISF		
Insulation Class & Material		
Ref. Magnetisation Curve No.		
CLIENT : PROJECT : PLANT :		
ISSUED FOR : PROPOSAL ☐ ENQUIRY ☐ ORDER ☐ FINAL ☐		
POTENTIAL TRANSFORMERS		
Make / Maker's Type		
Ref. Standard		
Winding Connection		
Ratio		
Rated Burden		
Accuracy Class		
Insulation Class & Material		
SWITCHES		
Make / Maker's Type		
Ref. Standard		
Type of Switch		
Rated Operational Voltage		
Utilisation Category		
Rated Operational Current		
Short Time Withstand Current		
No. of Poles / Break		
Type Test Certificate Ref. No.		
FUSES		
Make / Maker's Type		
Ref. Standard		
Type of HRC Fuse		
Rated Voltage / Current		
Category of Duty		
Prospective Breaking Current		
CURRENT TIME CURVE SHOWING PRE-ARCING AND TOTAL I^2T VALUES	Ref. No. Attached	
CONTACTORS		
Make / Maker's Type		
Ref. Standard		
Rated Operational Voltage		
Utilisation Category		
Rated Duty		
Rated Thermal Current		
OPERATING VOLTAGE OF COIL	Pick up Max./Min. Drop off Max./Min.	
Coil Consumption Pick up / Hold on		
RELAYS		
Make / Maker's Type		
Ref. Standard		
Operating Principle		
SettingRange		
Type of Mounting		
Burden		
Reset : Hand or Self		
Flag Indication Type		
Ref. Characteristic Curve Type		
Ref. Descriptive catalogue		
INSTRUMENTS AND METERS		
Make / Maker's Type		
Ref. Standard		
Operating Principle		
ScaleRange		

Accuracy	
Size	
Type of Mounting	
CLIENT : PROJECT : PLANT :	
ISSUED FOR : PROPOSAL ☐ ENQUIRY ☐ ORDER ☐ FINAL ☐	
CONTROL SWITCHES	
Make / Maker's Type	
Ref. Standard	
Contact Rating	
Utilisation Category	
PUSH BUTTONS	
Make / Maker's Type	
Ref. Standard	
Contact Rating	
Utilisation Category	
SIGNAL LAMPS	
Make / Maker's Type	
Ref. Standard	
Rated Voltage / Watts	
Type of Lamp Holder	
Type of Globe	
MINIATURE CIRCUIT BREAKER	
Make / Maker's Type :	
Ref. Standards	
Rated Current	
Breaking Capacity	
MOULDED CASE CIRCUIT BREAKERS	
Make / Maker's Type	
Ref. Standard	
Current Rating	
Breaking Capacity	
Setting Range of Thermal Release	
SettingRange of Magnetic Release	
CABLE GLANDS	
Material	
Type	
TERMINAL BLOCKS	
Make	
Type	
Current Rating	

TECHNICAL SPECIFICATION

INDUCTION MOTOR

CONTENTS

SECTION NUMBER	DESCRIPTION	SHEET NUMBER
1.0	SCOPE	3
2.0	STANDARDS TO BE FOLLOWED	3
3.0	SERVICE CONDITIONS	3
4.0	GENERAL DESIGN FEATURES	3
5.0	PERFORMANCE	7
6.0	COUPLING DETAILS	9
7.0	ACCESSORIES	9
8.0	VIBRATIONS	11
9.0	NOISE LEVEL	11
10.0	PAINTING	11
11.0	TESTS AND INSPECTION	11
12.0	PACKING	12

1.0 SCOPE

1.1 This standard covers the technical requirements of design, manufacture, testing at works and delivery in well-packed condition of medium voltage and high voltage induction motors.

1.2 This standard shall be read in conjunction with relevant specification sheets and other relevant references as specified therein.

2.0 STANDARDS TO BE FOLLOWED

2.1 The design, manufacture and testing of the equipment covered by this standard shall comply with the latest issue of IS-325 and other relevant Indian Standards, unless otherwise specified. Equipment complying with equivalent IEC standards shall also be acceptable.

2.2 The design and operational features of the equipment offered shall also comply with the provisions of latest issue of the Indian Electricity Rules and other relevant Statutory Rules & Regulations. The supplier shall, whenever necessary, make suitable modification in the equipment to comply with the above mentioned rules.

2.3 Flame proof motors shall, in addition, comply with the requirements laid down in IS: 60079-1.

2.4 Increased safety motors shall, in addition, comply with the requirements laid down in IS: 60079-7.

2.5 Motors with type of protection “n” shall, in addition, comply with the requirements laid down in IS: 9628.

2.6 Wherever any requirement laid down in this standard differs from that in Indian Standard Specifications, the requirement specified herein shall prevail.

3.0 SERVICE CONDITIONS

3.1 Ambient Conditions

The ambient conditions shall be as indicated elsewhere in this bid package.

3.2 System Details

3.2.1 The details of power system to which the motors will be connected shall be as indicated elsewhere in this bid package

3.2.2 The motors shall be suitable for connection to a power system where transient disturbances are very likely to occur. During the transient disturbances, voltage of the system may completely disappear and return in a short time with the motors still running and connected. Under this condition, the return of voltage may occur at such an instant that the induced e.m.f. in the motor is in phase with the applied voltage giving

rise to current surges which may reach a value equal to 1.6 times the starting current and also cause transient torques of large magnitudes.

4.0 GENERAL DESIGN FEATURES

4.1 Enclosure

4.1.1 The enclosure of motors for indoor and outdoor services shall be IP-54 and IPW-55 respectively as per IS: 4691, unless otherwise specified.

4.1.2 Motors for outdoor service shall be provided with special seals for the enclosure, joints, bearing housing, terminal boxes etc. so that no extra protective covering for ingress of water shall be required.

4.1.3 Vertical motors for outdoor installation shall be provided with a rain protective hood to prevent falling objects from entering the fan space.

4.1.4 All HT & LT motors shall have removable canopies. MOC of canopy shall be of Aluminium of suitable thickness with enough ventilation space.

4.1.5 All external hard ware's shall be zinc passivated or cadmium plated.

4.1.6 The enclosure shall be provided with threaded metallic plug to permit drainage of condensed water from the inside.

4.2 Cooling

4.2.1 All motors shall be totally enclosed fan cooled conforming to IC-411 as per IS: 6362 unless otherwise specified.

4.2.2 In case of CACA construction the same shall conform to IC-0161 as per IS: 6362.

4.2.3 In case of CACW construction, the same shall conform to ICW 37A 91 as per IS: 6362.

4.2.4 Wherever service conditions indicated in the specification sheet are such that corrosive agents are present in the surroundings, the following materials of construction for cooling tubes shall be adopted, unless otherwise specified.

For CACA motor - Aluminium tubes having minimum thickness of 1.6 mm

For CACW motor - Low carbon alloy steel

4.2.5 In case of CACW motors, the cooling tubes and flanges shall also be suitable for the cooling water analysis. Trays shall be provided for collection of leaking water with arrangement for its drainage.

4.2.6 The cooling fans shall be suitable for bidirectional rotation of motors. These shall be fastened to the motor shaft by means of compensating rings or will be balanced independent of the motor. Guide key or reference points shall be supplied to prevent wrong assembly. The cooling air shall be sucked from the non-driving end.

4.2.7 The cooling fans shall be made of non-sparking materials such as cast Aluminium (LM-6 alloy) / cast iron.

4.3 Direction of Rotation

4.3.1 Motors shall be suitable for both directions of rotation. In case of any design limitation, the same shall be indicated in the offer.

4.3.2 In either case, a plate showing the direction of rotation corresponding to the phase terminal markings shall be fitted at the driving end shield of the motors.

4.4 Stator

4.4.1 The stator laminations shall be made from suitable magnetic sheet iron varnished on both sides. Where ventilation is required, these shall be arranged in suitable packs, each pack being separated by spacers to form ventilating ducts for circulation of air.

4.4.2 The slot shall be open type with coils so arranged that the coils can be easily removed for inspection and repair.

4.5 Rotor

4.5.1 The rotor shall be of squirrel cage construction, unless otherwise specified.

4.5.2 For small motors, the squirrel cage shall preferably be of pressure die-cast construction. For large motors, the rotor bars and the end rings shall be of copper or copper alloy. The bars shall be firmly placed in slots to prevent vibration during start up / locked rotor condition. Conductor ends shall be securely fixed to the end rings using the latest brazing techniques. Retaining rings shall be provided for high speed machines for the end rings. The rotor cage shall be designed for the required starting and duty cycles.

4.5.3 Wherever wound rotor is specified, the windings shall have the same features as detailed for the stator windings. The rotor voltage shall not exceed the stator voltage.

4.5.4 The rotor shall be dynamically balanced and shall rotate perfectly with no preferential stop points. The rotor shall be constructed such as to allow the removal or addition of material for balancing.

4.5.5 The rotor shaft shall be electrically and magnetically so balanced that the induced shaft voltage does not exceed 200 millivolt. Otherwise the bearing housing at non-driving end shall be insulated for 2 KV.

4.6 Windings and Insulation

4.6.1 The motor coils shall be made out of insulated electrolytic grade copper conductor. Successive coils shall be connected by accessible joints, well brazed and finished smooth to prevent damage to insulation.

4.6.2 The motors shall be insulated assuming the power system neutral as isolated.

4.6.3 All motors shall be insulated with class F insulation as indicated in the specification sheet with tropical and fungicidal treatments.

4.6.4 Wherever class F insulation is specified, the windings shall be easily replaceable type and the temperature rise shall not exceed that of class B insulation.

4.6.5 The winding coils shall be dried, properly vacuum impregnated with suitable varnishes to withstand the site conditions and properly baked. At least two additional impregnations and baking shall be applied to the assembled stator coil, making a total

of three impregnations and baking. Finally the windings shall be painted with special anti-acid and anti-alkali paints to withstand the site conditions.

4.6.6 The windings shall be well brazed and capable of withstanding thermally and mechanically the transient disturbances specified under clause 3.2.2.

4.6.7 Lead-in wire between the windings and the outside terminals shall be made through bushings in H.V. motors. For M.V. motors, heat resistant insulated conductors shall be used as lead-in wire.

4.6.8 The windings shall be star connected for high voltage motors and delta connected for medium voltage motors.

4.7 Slip Rings and Brushes

4.7.1 Slip rings shall be located in the non-driving side. The material of construction shall be copper alloy. The slip rings and the brush gear shall be cooled by the motor cooling fan.

4.7.2 For explosion proof motors, the slip rings and brush gear shall be housed in a flameproof housing. In case this is not possible, the housing shall be pressurised type with flameproof pressure switch for interlocking with the motor. In either case, glass covers shall be provided for inspection.

4.7.3 The starting rheostats shall be designed for intermittent duty and rated for 10 minutes. Where speed regulation is required, the rheostats and the controllers shall be suitable for such duty and be continuously rated. Auxiliary contacts shall be provided on the controllers for connections to the motor supply controls to prevent wrong operations during starting.

4.8 Bearings

4.8.1 All motors shall be provided with bearings suitable for the application. The bearings must be guaranteed to ensure a smooth operation and a life not shorter than 30,000 hrs.

4.8.2 Where external thrusts are specified, the motors shall be fitted with special roller thrust bearings capable of withstanding the specified thrust. In such cases, the guaranteed life of the bearings shall not be less than 20,000 hours.

4.8.3 The bearing housing shall be effectively sealed against ingress of dust and water and creep age of lubricants along the shaft.

4.8.4 The bearing shall be suitable for both directions of rotation of the motor.

4.8.5 All motors of rating 15KW and above shall be provided with on-line grease lubrication arrangement for both DE and NDE side bearings, The arrangement shall be complete with grease nipple and drain plug located at convenient locations.

4.8.6 All oil lubricated bearings shall be fitted with oil level indicator and resistance temperature detector/dial type thermometer with alarm and trip contacts.

4.8.7 Self cooled bearing system shall be preferred.

4.8.8 The manufacturer shall specify the type of lubricant and the time interval of lubrication for the bearings of each motor.

4.8.9 The bearing temperature shall not exceed 90ºC for grease lubricated bearings and 70ºC for oil lubricated bearings.

4.8.10 Wherever shaft end-play has been specified, the bearings shall be capable of providing the specified end-play.

4.8.11 Greasing path shall be such that grease do not enter the winding. Grease in let and out shall be fitted with replaceable dust protection covers.

4.9 **Terminal Box**

4.9.1 All the terminal boxes shall have identical degree of protection as that of the motor.

4.9.2 The power terminal box shall be mounted on the right hand side of the motor as viewed from the coupling end. For M.V. Motors, design of terminal boxes shallbe such that it may be possible to arrange top/bottom/side entry of cables at site.

4.9.3 The power terminal boxes shall be as follows:

a) For H.V. motors - Phase segregated type capable of with standing the system fault level for 0.2 Sec. or more.

b) For M.V/LV. motors - Manufacturer's standard box with epoxy or SRBF moulded terminal board.

4.9.4 The mounting arrangement of power and neutral side terminal boxes for HV motors shall be identical so that it shall be possible to interchange the boxes at site.

4.9.5 In case of H.V. motors all the six leads of the motors shall be taken out, three on one side and three on the other side to separate terminal boxes. However, neutral shorting link shall be provided on the neutral box for star connection.

4.9.6 In case of M.V. motors, all the six leads of the motors shall be taken out to a common terminal box. Shorting links for delta connections shall be provided in the terminal box for motors 112 frame and above.

4.9.7 For increased safety motors and for motors with type of protection "n", the terminals shall be provided with positive locking device so that they do not become loose during normal operation.

4.9.8 The power terminal boxes shall have adequate clearances in between the terminals and also between the terminals and cable gland for proper termination of cables. Where more than one cable is required to be terminated in parallel, the spacing in the box shall be adequate for easy termination.

4.9.9 Separate terminal boxes shall be provided for connection of power, control and space heater cables.

4.9.10 All terminal boxes shall be complete with heavy duty double compression type cable glands and lugs/connectors to receive the external cables.

4.9.11 Where cross linked polyethylene cables are specified, the terminal box shall be suitably designed for proper termination of such cables.

4.9.12 The cable lugs shall be of tinned copper and suitable for crimping.

4.10 **Geared Motors**

Where geared motors are specified, the gears shall be oil lubricated, heavy duty as per AGMA class III and capable of transmitting the rated motor power continuously. They shall be capable of withstanding moderate shock loads having a service factor of 2 and the starting duties. They shall be silent and smooth in operation. Inspection glass shall be provided to indicate the oil level in the gear box.

5.0 PERFORMANCE

5.1 **Starting**

5.1.1 The motors shall be capable of being started direct-on-line, unless otherwise specified.

5.1.2 The starting torque of each motor shall be higher than the initial resisting torque of the driven load throughout the starting period even at a feeding voltage of 85% of the rated voltage for normal purpose motor and 80% of the rated voltage for special purpose motor.

5.1.3 The starting current of 11KV/3.3KV motors shall not exceed 550% (including positive tolerance) of full load current.

5.1.4 The starting current i.e. breakaway current of 415V motor shall not exceed the values indicated in IS: 12615. Also there shall be no further positive tolerance on the values of breakaway current.

5.1.5 The motors shall be suitable for the following starting cycle:

a) With the motor at ambient temperature - 2 successive starts and 3rd start after 5 minutes.

b) With the motor at steady state load temperature - 1 immediate start and 2nd start after 5 minutes. This sequence shall be repeated in the next hour.

5.1.6 Speed switch shall be provided, wherever required, to fulfil the starting conditions.

5.2 **Locked Rotor Condition**

5.2.1 The locked rotor withstand time (t_E), under hot condition at 110% of rated voltage shall be more than the starting time of the motor coupled to the load even at the lowest stipulated starting voltage by 2 secs. for motors, having starting time up to 10 secs. and by 5 secs. for motors, having starting time more than 10 secs.

5.2.2 For increased safety motors, t_E under hot condition shall not be less than 10 secs. The value of t_E shall be determined in the presence of purchaser's representative unless test certificate from an independent testing authority is submitted for similar motors. The time t_E and the locked rotor current shall be stamped on the name plate as well as indicated in the test certificates.

5.2.3 For deciding the time t_E in all cases, the temperature of the insulated stator and rotor shall not exceed the value stipulated under clause no. 5.4.3.

5.3 **Running**

5.3.1 All motors shall be continuous maximum rated (S1 duty as per IS: 325), unless otherwise specified.

5.3.2 The motors shall be capable of delivering the rated output without exceeding the specified temperature rise under the system voltage and frequency variation conditions as specified in the Specification Sheet.

5.3.3 The motors shall be suitable for running at the rated load for 5 minutes duration at 80% voltage and for 1 Sec. duration at 70% voltage, without exceeding the specified temperature rise.

5.4 **Temperature Rise**

5.4.1 The total temperature of the stator winding under full load running condition shall not exceed the values permissible for the specified insulation class. For increased safety motors, the total temperature shall be 10ºC less than for normal motors.

5.4.2 For explosion proof motors, the maximum surface temperature shall not exceed the values applicable for temperature class of the hazardous gases / vapours present in the surrounding area. However for type 'n' motors, the maximum allowable temperature shall not exceed 200ºC.

5.4.3 In case of starting and locked rotor conditions stipulated under clause nos. 5.1.4 and 5.2.1 respectively, the maximum temperature in the rotor shall not exceed the following values:

For squirrel cage rotor	-	300ºC
For wound rotor	-	As applicable to the insulation class
For explosion proof motor	-	As per temperature class of the hazardous gases / vapours, without exceeding the above temperature as applicable

6.0 COUPLING DETAILS

6.1 Unless otherwise specified, all motors shall be coupled to the driven equipment through flexible coupling.

6.2 Normally the coupling half for the motor shaft shall be supplied by the driven equipment supplier. The coupling half shall be keyed on the shaft with a tapered joint or shrunk with a straight joint. For this purpose, the motor manufacturer shall coordinate all details of the coupling system with the driven equipment manufacturer, wherever required.

6.3 Where rigid coupling is specified, the motor shaft shall have the desired class of accuracy.

6.4 For all vertical flange mounted motors, the limitations on shaft extension, run out, perpendicularity and eccentricity, as required by the driven machine supplier shall be complied with by the motor supplier.

6.5 i) If the motor is to be coupled to a reciprocating pump or compressor requiring fluctuating torque, the motor supplier shall ensure that the inertia of the driving and driven machine assembly shall be such that the variation in the armature current shall not exceed ±66% of the rated current while delivering full load.

ii) The measurement of armature current shall be done with the oscillograph.

iii) The additional fly wheel, if any, shall be assembled at such a distance from the motor so as to allow easy inspection of the windings.

iv) All necessary coordination with driven equipment manufacturer shall be carried out by the motor manufacturer.

6.6 i) Wherever belt drive is specified, the motor supplier shall ensure that the shaft extension and the bearings are suitable for the duty specified.

ii) Unless otherwise specified, the slide rails for all belt driven motors shall be supplied by the motor manufacturer.

7.0 ACCESSORIES

The motors shall be complete with the accessories as indicated in the specification sheet.

7.1 Space Heaters

7.1.1 Space heaters rated for 240 V A.C. shall be provided to keep the winding dry for all high and medium voltage motors, except for motors rated below 30 KW which shall be suitable for space heating by connecting 24 V A.C to any of the two motor winding terminals.

7.1.2 The location of the space heaters shall be such as to allow easy access for inspection, maintenance and replacement.

7.2 Name Plates

7.2.1 The name plates shall be of stainless steel with letters embossed on them.

7.2.2 The name plate shall contain all the relevant details as per IS: 325 and in addition shall indicate the following:

i) The description and code no. of motor

ii) Degree of protection of enclosure

iii) Temperature rise of windings under running condition

iv) Designation of bearings

v) Recommended type of lubricant and interval of lubrication

vi) Direction of rotation

vii) Mounting Arrangement

7.2.3 Flameproof motors shall have additional name plate containing relevant particulars as per IS: 60079-1.

7.2.4 Increased safety motors shall have additional name plate containing relevant particulars as per IS: 60079-7.

7.2.5 Motors with type of protection “n” shall have additional name plate containing relevant particulars as per IS: 9628.

7.3 Embedded Temperature Detectors

7.3.1 All high voltage motors shall be provided with 6 nos. of evenly distributed embedded resistance temperature detectors for measurement of winding temperature. These shall be located in positions at which the highest temperatures are likely to occur.

7.3.2 In addition, the high voltage motors shall be provided with

i) 1 no. RTD for hot air temperature measurement

ii) 2 nos. RTDs (1 on each side) for bearing temperature measurement of oil lubricated bearings. For grease lubricated bearings, RTD shall be provided only where specified

7.3.3 These RTDs shall be of platinum having 100 ohm resistance at 0ºC and temperature coefficient as 3.850×10^{-3}.

7.3.4 The RTDs shall be 3 lead type having power frequency insulation level of 2KV.

7.3.5 The RTDs shall comply with the requirements laid down in IS: 2848.

7.4 **Dial Type Thermometers**

7.4.1 In high voltage motors, the measurement of hot air and bearing temperature (of oil lubricated bearings) by dial type thermometers shall be provided wherever specified.

7.4.2 The arrangement shall consist of a dial type of mercury-in-steel thermometer so mounted that its stem shall be located in the maximum temperature region.

7.4.3 The thermometer shall have two potential free contacts for alarm and trip.

7.4.4 All contacts shall be rated for 2 Amps. at 110 V D.C.

7.4.5 For bearing temperature measurement, separate thermometers shall be provided for each bearing.

7.4.6 For grease lubricated bearings, temperature measurement arrangement shall be provided only where specified.

7.5 **Oil Supply System**

7.5.1 For large sized motors, where forced oil lubrication system is considered, a common oil supply system for the motor and the driven equipment shall be provided by the driven equipment manufacturer.

7.5.2 However, the motor supplier shall quote separate price for the complete oil system of the motor.

7.5.3 The system shall be suitable for location near the motor.

7.5.4 The oil supply system for each motor shall include:

i) 2 Nos. 100% rated motor driven pumps with motors

ii) 1 No. oil tank complete with oil level gauge and thermometer

iii) 1 No. oil cooler

iv) 1 No. oil filter

v) 1 No. differential pressure switch for filter

vi) 2 Nos. pressure switches

vii) Necessary piping

viii) Necessary control and interlocks

8.0 VIBRATIONS

The motor vibrations measured at the bearings must not exceed the limits specified in IS: 12075, unless otherwise stipulated in the specification sheet.

9.0 NOISE LEVEL

The motor noise level shall not exceed 85 dB measured at a distance of 1 metre from the motor.

10.0 PAINTING

10.1 Enclosures of the motor and its accessories shall be painted with two coats of anti-rust paint and two coats of anti-corrosive paint after suitable pre-treatment.

10.2 Epoxy paint, wherever specified, shall be used.

10.3 Unless otherwise specified, the finishing shade shall be light grey having shade No. 631 as per IS: 5.

11.0 TESTS AND INSPECTION

11.1 All motors shall be routine tested as per relevant standards.

11.2 Additional tests, wherever specified, shall be carried out on one motor of each rating.

11.3 For high voltage motors of each rating, polarization index test shall also be carried out.

11.4 All the above mentioned tests shall be carried out in the presence of purchaser's representative. In addition, the motor shall be subject to stage inspection at works and inspection at site for final acceptance.

11.5 These inspections shall, however, not absolve the vendor from their responsibility for making good any defects which may be noticed subsequently.

12.0 PACKING

12.1 The motors shall be properly packed to safeguard against weather conditions and handling during transit.

12.2 The shaft shall be properly clamped / supported.

12.3 Rust inhibiting agents shall be applied to fittings and sliding surfaces.

12.4 All flanges shall be closed with blanking plates to avoid entry of foreign materials.

12.5 The loose pieces of the motor / spare parts / Instruments shall be separately wrapped in moisture resistant paper and marked with identification marks and name plate of the corresponding motors.

12.6 The packing box / crate shall include a copy of installation, operation and maintenance manual.

TECHNICAL SPECIFICATION
MEDIUM VOLTAGE SWITCH BOARDS

CONTENTS

SECTION NUMBER	DESCRIPTION	SHEET NUMBER
1.0	SCOPE	3
2.0	STANDARDS TO BE FOLLOWED	3
3.0	SERVICE CONDITIONS	3
4.0	OPERATING REQUIREMENTS	3
5.0	DESIGN AND CONSTRUCTIONAL FEATURES	4
6.0	COMPONENT DETAILS	9
7.0	ACCESSORIES	14
8.0	PAINTING	14
9.0	TESTS AND INSPECTION	14
10.0	PACKING	15

1.0 SCOPE

1.1 This standard covers the technical requirements of design, manufacture, testing at works and delivery in well-packed condition of medium voltage Switchboards.

1.2 This standard shall be applicable for the Power Control Centres, Power cum Motor Control Centres and Motor Control Centres.

1.3 This standard shall be read in conjunction with relevant Specification Sheets.

2.0 STANDARDS TO BE FOLLOWED

2.1 The design, manufacture and testing of the equipment shall comply with the latest issue of the following Indian Standards, unless otherwise Specified. Equipment complying with equivalent IEC standards shall also be acceptable.

IS 8623	-	Specification for low voltage switchgear and control gear assemblies
IS/IEC 60947	-	Low-voltage switchgear and control gear (General Rules)
IS 5578	-	Guide for marking of insulated conductors
IS 10118	-	Code of practice for selection, installation and maintenance of switchgear and control gear
IS 11353		Guide for uniform system of marking and identification of conductors and apparatus terminals

Various components housed in the switchboards shall conform to the Indian Standard specifications as mentioned against the component details or IEC specifications.

2.2 The design and operational features of all the equipment offered shall also comply with the provisions of the latest issue of the Indian Electricity Rules and other Statutory Acts and Regulations, as applicable. The supplier shall, wherever necessary, make suitable modifications in the equipment to comply with the above.

2.3 Wherever any requirement, laid down in this standard, differs from that in Indian Standard Specification / IEC Specification, the requirement specified herein shall prevail.

3.0 SERVICE CONDITIONS

3.1 Ambient Conditions

These shall be as indicated elsewhere in bid package.

3.2 **System Details**

These shall be as indicated elsewhere in bid package.

4.0 OPERATING REQUIREMENTS

4.1 The 415V Voltage Switchboards shall be suitable for operating at the specified rating continuously, with the specified voltage and frequency variations under the ambientconditions indicated in Specification Sheet, without exceeding the permissible temperature rise and without any detrimental effect on any part.

4.2 Each incomer along with ACB shall be capable of taking of loads of both sections with spare margin of 50% for additional future load.

5.0 DESIGN AND CONSTRUCTIONAL FEATURES

5.1 General

5.1.1 The switchboards shall consist of an assembly of a series of floor mounting, identical, metal clad, dead front type sheet steel panels of unitized design. The panels shall be placed side by side to form a compact assembly and shall be extensible on either side.

5.1.2 The complete assembly shall be dust, damp and vermin proof having minimum degree of protection equivalent to IP-52 as per IS/IEC 60947.

5.1.3 The frame work of the cubicles shall be of bolted/welded construction. The minimum thickness of sheet steel shall be 2 mm for load bearing members, 1.6 mm for non-load bearing members and 3 mm for base channel. The doors and covers shall be fabricated from cold rolled sheets. Suitable reinforcement, wherever necessary, shall be provided.

5.1.4 The door hinges shall be concealed type.

5.1.5 All external hardwares shall be cadmium plated. The hardwares for fixing the removable parts shall be provided with retaining devices.

5.1.6 The doors and the removable covers shall be provided with non-deteriorating neoprene gaskets. Gaskets without any discontinuity shall be preferred. Gaskets shall be held in position in groove, in shaped sheet steel work or these shall be of U type. Adhesive cement, if used, shall be of good quality so that the gaskets do not come off during service.

5.1.7 All the components shall be accessible for inspection and maintenance without the necessity for removal of the adjacent ones.

5.1.8 The layout of the component inside the module shall be liberal to facilitate maintenance and interconnecting wiring between the components shall not be subjected to any undue stresses at the bends.

5.1.9 Mounting height of components requiring operations and observation shall not be lower than 300 mm and higher than 1800 mm.

5.1.10 Inter panel barriers shall be provided.

5.1.11 All the live parts which are accessible after opening of front cover/cable alley cover/back cover shall be properly insulated or provided with insulating barrier to prevent accidental contact. Removal facility shall be provided for all such parts.

5.1.12 Adequate arrangement for earthing shall be provided to safeguard the operator or other personnel from electric hazards under all conditions of operation.

5.2 Panel Arrangement

The Switchboards shall be of single front type with draw-out/non draw-out modules. Rear side of the panel shall have open-able sheets with proper hinged, gaskets and thumb tightening type screws arrangement.

Further the Switchboards shall be of fully compartmentalised type and divided into distinct panels, each comprising of :

i) A completely metal enclosed bus-bars compartment running horizontally the top.

ii) Individual feeder modules.

iii) Enclosed vertical bus-bars serving all modules, in case of multi-tier panels.

iv) A vertical cable alley.

v) Separate horizontal enclosure for all auxiliary power and control buses.

5.3 Circuit Breaker Controlled Feeders

5.3.1 The panels housing circuit breaker feeders shall be in single front draw out/non-draw out execution. The incoming bus coupler circuit breaker feeders shall be in single tier formation while the outgoing circuit breaker feeders may be in double tier formation, unless otherwise specified in specification sheet.

5.3.2 A suitable barrier shall be provided between the circuit breaker and the associated control, protective and indication devices including instrument transformers.

5.3.3 All the protective relays and meters shall be flush mounted type. The relays and meters pertaining to a particular circuit breaker shall be mounted on the same panel. Where it is not possible to accommodate all the relays and meters in the same panel, one metering panel shall be provided adjacent to the circuit breaker panel exclusively for that feeder. Location of these in the adjacent panel of other feeders shall not be acceptable.

5.3.4 A spacious cable chamber suitable for accommodation, support and termination of required number of power cables shall be provided at the back. No bare bus-bars or live connection shall intrude into the cabling space.

5.3.5 The switchboard shall be provided with following inter locks and safety features:

i) It shall not be possible to open the compartment door unless the breaker is drawn to isolated position.

ii) The withdrawn and engagement of a circuit breaker shall not be possible unless it is in open position.

iii) The operation of a circuit breaker shall not be possible unless it is in fully service, test or isolated position.

iv) It shall not be possible to close the circuit breaker in service position unless all auxiliary and control circuits are connected.

v) A breaker of the lower rating shall be prevented from engaging with the stationary element of higher rating.

vi) Insertion of the manual mechanism shall render the motorised mechanism in operation.

vii) Circuit breaker 'ON', 'OFF' indication shall be provided at the back of each panel. Alternatively, alarm shall be provided in case panel back door is opened with breaker "ON".

viii) Caution nameplate shall be provided at the back of incomer's panels where terminals are likely to remain live and isolation is possible only from remote end.

ix) Automatic safety shutter, with Padlocking facility for locking in closed position, to completely cover the spouts for the bus-bars and cable connection when the breaker is withdrawn.

5.4 Switch/MCCB Controlled Feeders

5.4.1 The panels housing motor starter or other feeders shall be either fixed or draw out type in single front or double front execution, as specified in Specification Sheet.

5.4.2 All components of one feeder shall be mounted on a rigid sheet steel chassis.

5.4.3 Each panel shall be divided into a number of modules in tier formation placed one above the other. These modules shall be closed on all sides.

5.4.4 The modules shall be so placed that largest one is placed at the bottom of the panel. Type modules shall be at least 300 mm from the base channel.

5.4.5 The number of modules shall be so decided that the cables in the cable alley are not over crowded. However the number of module in any panel shall not exceed six.

5.4.6 The minimum size of module shall be 300 mm and 200 mm for starter and switch fuse feeders respectively.

5.4.7 The minimum clear width of cable alley shall be 250 mm.

5.4.8 For MCC rated above 630 Amp. The incomer and bus coupler modules shall be located in individual single panel. For MCC rated for 630 Amp. and below the incomer and bus coupler modules shall be half the panel size.

5.4.9 The module door shall be so interlocked that it shall not be possible to open the door with switch in closed position and close the door unless the module is fully plugged in. Defeat interlock facility shall be provided.

5.5 Special Features of Draw out Modules

5.5.1 The module shall be fully draw out type with sheet steel chassis moving freely on the guides. Chassis of the same size shall be fully interchangeable. The minimum rating of the all draw-out modules shall be 150% of the required design capacity. All modules & cable alley shall have thumb tightening type screws.

5.5.2 The module shall have the following distinct mechanical positions:

i) Service -- In which both power and control contacts shall be made.

ii) Test -- In which power contacts shall be isolated but control contacts shall be made.

iii) Isolated -- In which both power and control contacts shall be Isolated.

Maintenance position shall be preferred.

5.5.3 Each position shall be clearly marked. Padlocking facility shall be provided to padlock the chassis in any of the position.

5.5.4 The movement of the chassis from one position to the other shall be controlled by using an appropriate racking mechanism. Stopper shall be provided to prevent over travel of the chassis beyond the isolated position.

5.5.5 The guiding system shall permit smooth movement of the module and the power and control contacts shall be self-aligning type so that accurate alignment of the contacts is ensured.

5.5.6 No wiring shall be taken to the door. Only the actuators of the push buttons and switches, lenses for the indicating lamps and Perspex cover for meters shall be mounted on the door.

5.5.7 The power contacts shall be of plug-in/stab-in type made of silver plated copper, spring loaded and of adequate current carrying capacity. The contacts shall be so designed that contact pressure is maintained both under normal and short circuit conditions.

5.5.8 The parting contacts, both on bus-bar side and outgoing cable side, shall always be copper to copper and both sides silver plated. A bimetallic strip shall be used where two dissimilar materials are in contact.

5.6 Bus-Bars and Connections

5.6.1 The bus-bars shall be for three phase and neutral. Bus bar shall be of tinned copper only.

5.6.2 The horizontal bus-bars shall be insulated with heat shrinkable PVC sleeves (colour coded) of reputed make to protect against approach to live parts. The vertical bus-bars shall be PVC sleeved (colour coded) and shrouded by barriers. Transparent fibre glass type insulating shrouds shall be provided for all connecting links/ joints of horizontal/vertical bus-bars.

5.6.3 The bus-bars shall be amply sized to carry the rated continuous current under the specified ambient temperature without exceeding temperature limits specified in IS: 8084.The thermal rating of the bus-bars shall be designed to withstand the system fault current for 1 second without exceeding the limiting temperature of 200ºC for bare Aluminium/Copper. Calculation for bus-bars sizing shall be furnished along with the offer.

5.6.4 Horizontal bus-bars shall be of the same cross-section through out. Stepped bus-bars shall not be acceptable.

5.6.5 The bus-bars shall be arranged and colour coded according to IS: 5578 / IS: 11353.

5.6.6 The bus-bar chamber shall be sufficiently spacious and shall have separate screwed covers for maintenance purpose.

5.6.7 The bus-bars shall be rigidly supported at equal intervals to withstand maximum short circuit stresses. The supports shall be of moulded construction with built-in anti-tracking barriers. The support materials shall be of DMC or fibreglass reinforced thermosetting plastic.

5.6.8 Bus-bar joints shall be between the two transporting sections only.

5.6.9 A minimum of two bolts shall be used in bus-bar joints. Only high tensile electric galvanized bolts, nuts and washers shall be used.

5.6.10 In case of Aluminium bus-bars, all joints shall be suitably treated to avoid oxidation of contact surfaces and bimetallic corrosion.

5.6.11 Bimetallic washer shall be provided for power connection of two dissimilar metals

5.7 Earth Bus

A continuous earth bus of Aluminium, running along the entire length of the lower part of the switchboard shall be provided with lugs at two ends for external connections. The

minimum size of earth bus shall be suitable for carrying three phase fault current for 1 sec.

5.8 Bus Duct

5.8.1 Suitable extension of bus-bars in proper phase sequence on the top or bottom as specified in Specification Sheet, with the connecting bolts shall be provided where connection of transformer to switchboard is specified to be through bus duct.

5.8.2 Bus duct between two halves of a switchboard, if required, shall be supplied by the switchboard manufacturer. The bus-bars of interconnecting bust duct shall be similar to the main bus-bars of the switchboard and as specified above.

5.8.3 Bust duct between transformer and incoming breaker panel, shall conform to technical specifications of bus duct enclosed elsewhere in bid package.

5.9 Clearances and Creepage Distances

5.9.1 The clearances and creepage distances shall not be lower than the values specified below:

i)	Minimum clearance between two live conductors	--	20 mm
ii)	Minimum clearance between live parts and accidentally dangerous part	--	20 mm
iii)	Minimum creepage distance	--	28 mm

5.9.2 The clearances and creepage, as specified above, shall definitely be maintained in the bus-bar system. Provision of bus-bar insulation, separators or barriers shall not be considered to reduce the clearance from the values specified above.

5.9.3 At the termination points in the equipment e.g. switches, contactors, thermal relays etc. It is realized that above clearances may not always be possible to be maintained. All such points, where above clearances and creepage distances are not possible to be maintained, shall be insulated or taped.

5.10 Insulation

5.10.1 The insulation used shall be non-hygroscopic and may be of porcelain, epoxy resins or fibreglass moulded with plastic. It shall be of adequate electrical, mechanical and thermal strength to give trouble free service during normal operation and short circuit conditions.

5.10.2 The insulation shall be treated suitably to withstand the tropical conditions and atmospheric pollution, as specified in Specification Sheet.

5.11 Power Wiring

5.11.1 The connections from bus-bar to individual functional unit on the modules shall be of PVC insulated flexible copper cables or taped Copper/Aluminium strip.

5.11.2 The power wiring size shall be decided based on rating of the switch/breaker after using a rating factor of not more than 50% over the current rating in free air.

5.11.3 Power wiring size selected for breaker controlled module shall also be able to withstand full short circuit current for duration of 0.25 sec.

5.11.4 In any case minimum size of power wiring shall not be less than 4 sq. mm copper.

5.11.5 The size of connection from incomer to horizontal bus-bar and from horizontal bus-bar to bus-coupler shall not be less than the size adopted for horizontal bus-bar.

5.12 Control Wiring

5.12.1 The switchboard shall be completely factory wired and ready for external connections.

5.12.2 The wiring shall be carried out with flexible stranded PVC insulated copper conductor cables of 1100 Volt grade. The size of wires shall be as follows:

C.T. Circuit -- 2.5 sq. mm

V.T. and Control Circuits -- 1.5 sq. mm

5.12.3 All wiring shall be provided with dependent both ends marking as per IS: 5578. Numbered ferrules, reading from the terminals outwards, shall be provided at both ends of all wiring for easy identification. These shall be interlocking type plastic ferrules.

5.12.4 Control wiring circuits, fed from a supply common to a number of panels, shall be so protected that failure of a circuit in one panel does not effect the operation of the other panels.

5.12.5 The wiring to the equipment mounted on the doors shall be carried out with flexible multi strand copper conductor cable and so supported that on opening of the door there is no undue strain on wire leads.

5.12.6 The control cables shall be neatly arranged and property supported.

5.13 External Cable Termination

5.13.1 All power and control cables shall enter the switchboard from the bottom unless otherwise specified in Specification Sheet. Sufficient space shall be provided for ease of connection and termination of cables.

5.13.2 Compression type cable glands along with the cable lugs as required shall be provided for termination of cables.

5.13.3 The cable glands shall be of rolled Aluminium or nickel/cadmium plated brass heavy duty double compression type and shall be mounted on a removable gland plate, provided at a minimum height of 75 mm from the bottom of the switchboard. Two number spare knockouts of size 20 mm shall also be provided on the gland plates for future use. Gland for termination of single core cables shall be nonmagnetic type.

5.13.4 For all power cables, crimped type Aluminium lugs for Aluminium cables and tinned Copper lugs for Copper cables shall be provided.

5.13.5 The terminal blocks shall be pressure clamp type up to 35 sq. mm cable sizes and bolted lug type for higher sizes of cables. These shall be protected type and rated for 1100 Volts service. The minimum current rating of terminal block shall be 16 Amp. The construction shall be such that after the connection of cables by means of lugs, necessary clearance and creepage distance are available.

5.13.6 Where more than two cables in parallel are required to be terminated, a system of bus links shall be provided with adequate clearance and spacing.

5.13.7 Suitable clamps to support the vertical run of cables shall be provided.

5.13.8 The terminal block shall be grouped according to circuit functions and suitably numbered. 20% extra terminals shall be provided in the terminal block.

5.13.9 For power connections, suitable marking on the terminals shall be provided to identify the phases.

5.14 **Feeder Details**

5.14.1 The requirements of incomer, bus coupler and outgoing feeders shall be indicated in the single line diagram, feeder details and corresponding schematic diagrams by LSTK bidder.

5.14.2 Interlocks shall be provided between incomers and bus section panels. The interlocks shall be either electrical or mechanical type. In addition, arrangement for defeating the interlock shall also be provided to facilitate manual changeover.

5.14.3 Auto changeover scheme, wherever specified, shall be provided.

5.15 **Dummy Panels**

Dummy panels complete with bus-bar system in 400 mm width may be required for which unit price shall be indicated.

5.16 **Control Power Supply**

5.16.1 D.C. Power required for closing, tripping and indication of circuit breaker feeders shall be supplied at the bus coupler panel through two completely separate circuits by owner, one for tripping and other for closing and indication.

5.16.2 For receiving each external control supply, a double pole miniature circuit breaker shall be provided. This power shall be distributed inside the switchboard for each circuit breaker feeder having its MCB unit.

5.17 **Space Heater Power Supply**

5.17.1 Panel space heater shall be fed from a separate bus common for the whole board. This bus shall be fed from owner's supply for which a double pole MCB shall be provided in bus section panel.

5.17.2 Power supply for space heaters of motors shall be tapped from this bus by means of a MCB located in the motor feeder compartment. These MCBs shall be of double pole and rated for 15 Amp.

6.0 COMPONENT DETAILS

Components of the switchgear shall ensure type of coordination 'C' as per IS: 60947 (Part 4/ Section 1). The make of the components shall be as specified in Specification Sheet.

6.1 **Circuit Breaker**

6.1.1 The circuit breaker shall comply with the requirements of IS/IEC 60947.

6.1.2 All circuit breakers shall be of P2 (0-3 min - CO - 3 min - CO) category, capable of carrying the specified current at the site conditions and making/breaking of the system fault current.

6.1.3 Type test certificates from an independent testing authority shall be furnished along with the offer for each circuit breaker rating and type.

6.1.4 The circuit breakers controlling motors shall be suitable for DOL starting and stopping of induction motor a number of times.

6.1.5 The circuit breakers controlling capacitors shall be suitable for energizing and de-energizing the rated capacitor bank.

6.1.6 The circuit breakers shall be of the 3 phase, 4 pole horizontal draw out, horizontal isolation, air break type.

6.1.7 All LT circuit breakers shall be of ACB (Air Circuit Breaker) type. The ACBs shall have horizontal draw-out , horizontal isolation type & trolley mounted type only. Minimum 2 nos. of trolley shall be supplied.

6.1.8 The circuit breaker shall be suitable for electrical or manual closing as specified. Manual operated breakers shall have independent manual spring closing mechanism. In case of electrically operated breaker, it shall have motor wound spring mechanism. In all cases tripping shall be by means of shunt trip coil, unless other wise specified in Specification Sheet.

6.1.9 All circuit breaker units of the same rating shall be physically and electrically interchangeable.

6.1.10 The circuit breakers shall be electrically and mechanically trip free and provided with anti-pumping feature.

6.1.11 Provision shall be made for slow closing for maintenance purposes. A suitable handle shall be provided one for each board for this purpose.

6.1.12 The circuit breakers shall have three positions i.e. service, test and isolated with the cubicle door closed. Necessary stoppers shall be provided to prevent the excessive movement of the breaker cradle than desired for the position. Service and test positions of the breaker shall have monitoring switch having 1NO+1NC contacts.

6.1.13 The circuit breaker shall be provided with emergency manual trip device, mechanical 'ON', 'OFF' and 'ISOLATED' position indicators and operation counter.

6.1.14 A maintenance truck/device for raising, lowering and withdrawal of the circuit breaker shall be supplied for each switch board.

6.1.15 The arc interrupting devices shall be capable of interrupting satisfactorily current from zero to the rated interrupting current when used on predominantly capacitive or inductive circuits, without requiring excessive maintenance of the contacts. The arc shall be restricted within the interrupting chamber and no emission of flame shall be allowed which may cause electrical breakdown or damage to insulation on the apparatus.

6.1.16 The main contacts shall be self aligning, adjustable and replaceable type.

6.1.17 The arcing contacts shall be easily accessible for maintenance and inspection and shall be easily replaceable type. They shall be provided with, contact face of special arc-resisting and non-pitting metal.

6.1.18 Mechanical safety interlock shall be provided for safe operation and movement of the breaker.

6.1.19 The circuit breakers shall be provided with minimum of four normally open and four normally closed auxiliary switch contacts, over and above those required for its own control scheme, for Owner's use. The contacts shall be wired separately to the terminal board.

6.2 Moulded Case Circuit Breakers

6.2.1 The circuit breaker shall conform to IS/IEC 60947 and shall be of P2 category having rupturing capacity as specified in Specification Sheet and mounted on a draw out chassis.

6.2.2 The circuit breaker shall be provided with spring assisted quick make quick break type manually operated trip free mechanism, mechanical 'ON', 'OFF' position indicators, thermal tripping devices of inverse characteristics, instantaneous short circuit tripping

devices and necessary auxiliary and alarm switches. The MCCB Chassis shall be provided with service, test and isolated position and automatic safety shutter.

6.2.3 The thermal and short circuit tripping devices shall be adjustable type.

6.2.4 When used for motor circuits, shunt trip device shall be provided and the let through power of controlling MCCB shall be lower than the respective contactor.

6.2.5 In addition, under voltage trip shall be provided, if specified in Specification Sheet.

6.3 Switches

6.3.1 The switches shall be motor duty type AC 23 Category and shall comply with the requirements laid down in IS/IEC 60947. Switches up to 63 Amps shall be rotary type and those of 100 Amps. & above, link type.

6.3.2 'ON' and 'OFF' position of the switches shall be indicated on the module. Provision shall be made to lock the switch in the 'OFF' position.

6.3.3 The fixed contacts shall be shrouded type. All contacts shall be silver plated.

6.4 Fuses

6.4.1 The fuses shall be of non-deteriorating HRC cartridge link type and shall conform to IS: 13703. They shall be suitable for the load and service required in the circuit.

6.4.2 One fuse puller shall be supplied along with each board.

6.5 Air Break Contactors

6.5.1 The Air Break Contactors shall be of Category AC3/AC4, unless otherwise specified, conforming to IS: 60947 and flapper type.

6.5.2 The dropout voltage shall not exceed 65% of rated voltage.

6.5.3 Each contactor shall be provided with auxiliary contacts as required. The rating of the auxiliary contacts shall be 5 Amps. AC or 1 Amp DC at the specified control voltages. The spare auxiliary contacts shall also be wired up to the terminal blocks.

6.6 Bimetal Thermal Overload Relays

6.6.1 The contactor shall be provided with three pole bimetal thermal overload relays, unless other-wise specified. The bimetal relays shall be of suitable range, ambient temperature compensated and shall be separate mounting type. They shall be adjustable through graduated scale and shall be provided with changeover contact. Thermal relays having long time/current characteristics, operated through saturated C.T.s shall be supplied, wherever required.

6.6.2 Bimetal thermal relays shall conform to IS: 3231 and IS/IEC 60947 and shall have built-in single phasing preventor.

6.6.3 The bimetal relays shall be provided with a manual resetting device resetable after opening module door. Auto reset thermal relays are not acceptable.

6.7 Current Transformers

6.7.1 The current transformers shall conform to IS: 2705.

6.7.2 C.T.s shall be Class F insulated and vacuum impregnated or resin cast. The C.T.s shall be rigidly mounted and shall be easily accessible for maintenance and testing.

6.7.3 The short time thermal withstand ratings of C.T.s shall be same as the thermal withstand rating of the breakers.

6.7.4 The C.T.s output shall be minimum 15VA for breaker feeders and 7.5 VA for the other feeders per phase and in any case, the output shall be adequate for the protection and metering duties involved with sufficient margin. The C.T.s shall have the following accuracies for the various applications:

	Application	**Class of accuracy as per IS: 2705**
i)	For metering service	- 1
ii)	For use with protective relays	- 5P
iii)	For use with restricted earth fault and differential relays	- PS

6.7.5 The C.T. cores for metering and protection shall be separate.

6.7.6 All the C.T.s shall be provided with terminals and shorting links. One of the terminals of the C.T. shall be earthed. The polarity of the C.T.s shall be clearly marked.

6.7.7 Provision of Interposing C.T.s is not acceptable.

6.7.8 The C.T.s shall be capable of withstanding momentary open circuit on the secondary side without injurious effects.

6.8 Voltage Transformers

6.8.1 The V.T.s shall be Class F insulated and vacuum impregnated or resin cast conforming to IS: 3156.

6.8.2 The primary nominal voltage shall be equal to the system nominal voltage. The secondary terminal voltage shall be 110 V.

6.8.3 The primary and secondary winding shall be protected by HRC fuses in each phase except in the ground phase of the secondary side.

6.8.4 The V.T.s shall be mounted on separate withdrawable carriage. The accuracy Class of V.T.s shall be 1.

6.8.5 The rated output of each V.T. shall be adequate for the relays, meters and associated wiring connected to it and shall not be less than 50 VA per phase.

6.9 Control Transformers

These shall be air cooled Class F insulated and vacuum impregnated. The rating of control transformer shall be twice the hold on VA of all contactor/relays or 2.5 KVA whichever is high. It shall be free from hum and rigidly mounted. Epoxy cast transformers shall be preferred.

6.10 Transformers for Kondorffer Starting

These shall be three phase core type, Class F insulated and vacuum impregnated. Tapping at 90%, 80%, 70% & 60% shall be provided and terminals shall be brought out for easy change of tapping at site. The operating temperature shall not exceed 80ºC.

The transformers shall be suitable for taking 7.5 times the specified full load current of the motor continuously for 120 secs.

6.11 Relays

6.11.1 All protective relays shall be of latest version, microprocessor based numerical type with communication port . 100% redundancy shall be provided for communication.

6.11.2 All other auxiliary relay such as master trip, trip circuit supervision, under voltage, timers etc can be electromagnetic/static type.

6.11.3 All outgoing motor feeder shall be protected with thermal overload relay and in addition motors which are 75KW and above earth leakage relay (ELR) with CBCT shall be provided for earth fault protection.

6.12 Timers

The timers shall be electronic type with manual/auto reset features as per the functional requirements. The time delay shall be 'ON' delay or 'OFF' delay type as specified. The repeat accuracy shall be 0.5% or better.

6.13 Single Phasing Preventor

6.13.1 Single phasing preventor relay shall be of the current operated type, suitable for the system voltage. The relay shall not operate for normal system voltage but operate positively in the event of unbalanced voltage more than the normal. The relay shall not operate in case of total interruption of power.

6.13.2 The relay shall be fail safe, self reset type and provided with flag indication. The relay operation shall be independent of the motor rating, loading and speed.

6.14 Instruments and Meters

6.14.1 All instruments shall be flush mounting type with square face of 96 mm x 96 mm. They shall be tropicalized and dust tight.

6.14.2 Meters shall be digital multifunctional meters with communication port for remote uses.

6.14.3 All ammeters and voltmeters, to be provided separately, shall have 0-240º uniform scale and shall be moving iron spring controlled deflection type of class 1.5 accuracy as per IS: 1248. The scale range of the ammeters and voltmeters shall be as indicated in the Feeder details.

6.14.4 In case of motor feeders, the ammeters shall be graduated uniformly upto C.T. primary current and with compressed end scale upto 6 times C.T. primary current. Red pointer shall be provided, which shall be adjusted at site for indicating full load current of the motor.

6.15 Push Buttons and Control Switches

6.15.1 The switches and push buttons shall conform to utilization category AC11/DC11 as per IS: 60947. The contact shall be rated to make, break and carry inductive current of 5 Amp at 415 V AC and 1 Amp at 220 V DC.

6.15.2 The control switches shall be spring return rotary type, unless otherwise specified and provided with pistol grip type handle. The control switches for circuit breakers shall be additionally fitted with lost motion devices and sequencing devices.

6.15.3 The selector switches shall be stay put rotary type and provided with oval shape handles.

6.15.4 The push buttons shall be of momentary contact spring loaded type with a set of normally close and open contacts. The push button for 'Start' shall be shrouded type and coloured green, stop push button shall be un-shrouded type and coloured red and other push buttons shall be un-shrouded type coloured black. The fixing ring shall be metallic white.

6.15.5 Emergency stop push buttons, if specified, shall be lockable in pushed position.

6.16 Miniature Circuit Breakers

6.16.1 The miniature circuit breakers shall conform to IS: 8828 and shall be of duty category M-9.

6.16.2 It shall be provided with overload and short circuit protective devices in a heat resistant housing.

6.16.3 A certificate for short circuit rating and Current-Time tripping curve shall be furnished along with the offer.

6.17 Signal Lamps

6.17.1 Signal lamps shall be provided to indicate the various circuit conditions as shown in scheme drawings. The colour of the lamps for various functions shall be as follows :

Red	--	Circuit breaker/switch/contactor closed.
Green	--	Circuit breaker/switch/contactor open.
White	--	Trip circuit healthy.
Amber	--	Alarm and auto trip.
Blue	--	Non-Trip

6.17.2 All lamps shall be of low voltage glow protection (LVGP) LED type with lumen output of 200 mili candela in axial direction.

7.0 ACCESSORIES

7.1 The supply shall include the following accessories:

-- Maintenance truck/device for raising, lowering and withdrawal of circuit breaker, if required.
-- Fuse puller.
-- Test plug for relays.
-- Test plug for kWh meters.

7.2 Space Heater

Each vertical section shall be provided with a thermostatically controlled space heater, rated for 240 V, 50 Hz and controlled through double pole miniature circuit breaker.

7.3 Name Plates

7.3.1 The switchboard shall have large name plate on the top indicating its Name, Designation and Code No.

7.3.2 Each feeder shall be provided with name plate. Each single front panel shall have name plate indicating panel number both in front and back.

7.3.3 All control switches, push buttons, lamps etc. shall have functional identification labels.

7.3.4 Name plate shall be of black Perspex with white engraving and of minimum 3mm thick.

7.4 Any other accessories required, but not specified, shall also be supplied to make the switchboard complete in all respects and ensure safe and proper operation.

8.0 PAINTING

8.1 The enclosure, after degreasing, pickling in acid, cold rinsing, phosphatising, passivating etc. shall be painted with two coats of anti-rust paint followed by two coats of anticorrosive paint.

8.2 Epoxy based paint shall be used, if indicated in Specification Sheet.

8.3 All paints shall be carefully selected to withstand tropical heat and extremes of weather. The paint shall not scale off, crinkle or be removed by abrasion due to normal handling.

8.4 Unless otherwise specified, the finishing shade shall be light grey having Shade No.631 as per IS: 5.

8.5 One litre of paint shall be supplied along with each board for touch up at site.

9.0 TESTS AND INSPECTION

9.1 All the switchboards shall be subjected to routine test as per IS: 8623 and their components as per relevant standards.

9.2 Additional tests, wherever specified, shall be carried out.

9.3 All the above tests shall be carried out in presence of Purchaser's representative. In addition, the equipment shall be subjected to stage inspection during process of manufacture at works and site inspection.

9.4 These inspections shall however, not absolve the vendor from their responsibility for making good any defect which may be noticed subsequently.

10.0 PACKING

10.1 The board shall be properly packed before despatch to avoid damage during transport, storage and handling.

10.2 The packing box shall contain a copy of the installation, operation and maintenance manual.

10.3 A sign to indicate the upright position of the panels to be placed during transport and storage shall be clearly marked. Also proper arrangement shall be provided to handle the equipment.

PLANT INSTRUMENTATION & PARAMETER MONITORING SYSTEM

Instrumentation & a suitable lab facility is very important to monitor, control and sustain the performance of the treatment process. The unit operations are many and hence, a proper parameter profiling is essential for sustained output.

An indicative P& I diagram is enclosed showing the list of Instrumentation Items to be provided in the process. The brief details are provided herein:

The following are the instrumentation items in the process:

Level Switches	Every pump that pumps liquid to the process will have a level switch with dry run protection. The pump will be automatically cut off once the low level (preset) is reached.
Pressure Gauges	0 – 7 bar, 1.5” dial, glycerine filled, SS Bourdon pressure guage at the following locations: • Discharge of all horizontal centrifugal pumps in the process • Inlet and outlet of sand filter and carbon filter • Mounted on all micron filters and bag filter • Feed and Reject line of the Ultra Filtration System 0 – 30 bar, 1.5” dial, glycerine filled, SS Bourdon pressure guage at feed and reject line of the first stage of R.O. process 0 – 50 bar, 1.5” dial, glycerine filled, SS Bourdon pressure guage at feed and reject line of the first stage of R.O. process
Pressure Switches	Low Pressure Switch in the feed to the 1st and 2nd stage R.O. high pressure pump to cut off pressure below 1.5 bar High Pressure Switch in the discharge line of the high pressure pump of the above two stages at set cut off pressure.

In situ Flow meters	Rotameter type, acrylic body in situ flow measurement for the following locations: 1. Sand filter inlet 2. UF feed, permeate and reject 3. R.O. stage 1 permeate and stage 1 reject 4. R.O. stage 2 permeate and stage 2 reject
Electro Magnetic Flow Meters	EMFM – for showing the measure of flow as well as recording the same, shall be provided in the following areas: 1. Feed to the Electro Reactor i.e. from T 101 to the inlet of the Electro Cell, to measure the quantum of EFFLUENT that is treated every day / pre-determined time frequencies. 2. Raw Sewage Transfer pump outlet that will fall into the common effluent collection tank to measure the quantum of SEWAGE that is treated every day / pre-determined time frequencies. 3. R.O. permeate common header from Stage 1 to Stage 2 falling into final treated water tank, to measure the quantum of RECYCLE WATER that is generated every day 4. R.O. reject from Stage 2 to measure the quantum of REJECT that is generated every day.

ONLINE MONITORING	
TDS	On line TDS meter with recording will be provided at the inlet and outlet of the R.O. system to monitor R.O. membrane performance
pH	On line pH meter with recording will be provided at the inlet and permeate of the R.O. system to monitor R.O. feed water quality and treated water quality
Free Residual Chlorine	RCI with interlock will be provided in the R.O. feed to trip the R.O high pressure pump and feed pumps, if Free Chlorine beyond 0.3 ppm is detected in the feed water line
OFF LINE MONITORING	
A On-Site Laboratory will be set up for periodical monitoring of the following inlet and outlet quality parameters	
COD	Daily monitoring at the following locations, using EMERCK / HACH / equivalent Table Mounted COD meter 1. Inlet to Electro Process 2. Outlet of Electro Process 3. Inlet of raw sewage 4. Inlet to the Aeration System 5. Outlet of the Aeration System 6. Outlet of the UF system
Turbidity	Daily measurement at the following locations, using Nephelometric Turbidity Table Mounted Meter: 1. Inlet to Electro Reactor 2. Outlet of TS 101 i.e. tube settler outlet from Electro Reactor 3. Outlet of Secondary Clarifier 4. Outlet of Carbon Filter 5. Inlet to U.F. system 6. Outlet of U.F. system

pH	Daily monitoring at the following locations, using Table Mounted pH Meter: 1. Inlet to Electro Reactor 2. Outlet of Electro Reactor 3. Inlet to Aeration Process 4. Inlet to UF system 5. Inlet to RO stage 1 and stage 2 6. Permeate of RO stage 1 and stage 2 7. Inlet to filter press
TDS	Daily measurement at the following locations, using table mounted TDS meter 1. Inlet to Electro Reactor 2. Inlet to Aeration Tank 3. Inlet to R.O. stage 1 and stage 2 4. Permeate of R.O. stage 1 and stage 2 5. Reject of R.O. stage 2
T-Hardness and Ca-Hardness as ppm CaCO3	Daily monitoring at the following locations, using Hardness Test Kits 1. Inlet to Electro Reactor 2. Inlet to R.O. plant 3. R.O. permeate
Silica	Daily measurement at the following locations, using Color Comparator Method Silica Test Kit 1. Inlet to R.O. stage 1 and stage 2 2. Reject of R.O. stage 2

Iron	Daily measurement at the following locations, using Color Comparator Method Iron Test Kit 1. Inlet to Electro Reactor 2. Inlet to U.F. system 3. Inlet to R.O. stage 1
Free Residual Chlorine (FRC)	Daily measurement at the following locations, using O- toludiene test kit 1. Inlet to Sand Filter 2. Inlet to U.F. 3. Inlet to R.O.
OFF SITE MONITORING - by providing samples to approved laboratories	
BOD	Weekly/ Fortnightly monitoring at the following locations, by giving samples to external laboratories Inlet to Electro Reactor Outlet of Electro Reactor Inlet to Aeration Process Outlet of Secondary Clarifier
TDS	Daily measurement at the following locations, using table mounted TDS meter 6. Inlet to Electro Reactor 7. Inlet to Aeration Tank 8. Inlet to R.O. stage 1 and stage 2 9. Permeate of R.O. stage 1 and stage 2 10. Reject of R.O. stage 2

NOTE:

Apart from these structured monitoring, the process also will incorporate once in 15 days testing of heavy metals in the feed to the Electro Reactor, feed to R.O. and in R.O. reject.

Once in a month, T.O.C. will be measured in the inlet effluent and overflow of Electro Reactor tube settler (TS 101 overflow)

All these information and database will be logged in a proper log book format and also will be loaded into a database management system that will provide monthly report outputs on the following:

1. Treatment Quantification - inlet and outlet
2. Process Qualification - pressure, flow, level
3. Parameter Qualification – as detailed above

In addition, the report will also provide details on shut downs, maintenance activities undertaken, plant failures, UF & RO membrane cleaning processes done in that month, filters that were changed etc..

The report will also be used as Inventory Management System to manage the quantum of chemicals stored, mechanical, electrical & instrumentation spares as also the spares for piping, cables, glanding and termination accessories that will be stored in the Stores.

Bidder to note that, in case of any discrepancy between the Project specifications given above and the General Specification that follows, the former will be taken as the basis of evaluation and implementation.

COMMON EFFLUENT TREATMENT PLANT FOR C.P.I.I.U.C AT SIDCO PHARMACEUTICAL COMPLEX, ALATHUR, KANCHIPURAM DISTRICT

INSTRUMENTATIONSCOPE

FOR

COMMON EFFLUENT TREATMENT SYSTEM

CONTENTS

SECTIONNUMBER	DESCRIPTION	
1.0	GENERAL	
2.0	CODE&STANDARDS	
3.0	UTILITIES	
4.0	AREACLASSIFICATION	
5.0	SCOPEOFWORK	
6.0	INSTRUMENTANDCONTROLPHILOSOPHY	
7.0	INSTRUMENTATIONDESIGNCRITERIA	
8.0	FIELDCABLINGJUNCTIONBOXESAND GROUNDING	
9.0	INSTRUMENTATIONREQUIREMENT	
10.0	ERECTION &COMMISSIONING	
11.0	SPARES	
12.0	TESTING&INSPECTION	
13.0	PACKAGINGANDIDENTIFICATION	
14.0	INSTRUMENTSUBVENDOR	
15.0	DOCUMENTATION	

LISTOFATTACHMENTS

ATTACHMENT NUMBER	DESCRIPTION	
PC94-PNIN-SP-01	SPARES LIST	
PC94-PNIN-IVL	INSTRUMENTS VENDOR LIST	
PC94-PNIN-ID	INSTRUMENT DRAWINGS DOCUMENT	

1.0 GENERAL

This document defines the general requirement of instrumentation scope for Effluent TreatmentSystem.

2.0 CODES&STANDARDS

IEC 13	Diagrams, Charts and Tables, Preparation of Logic Diagrams
IEC 534	Industrial - Process Control Valves
IEC 584	Thermocouples
IEC 605	Equipment Reliability Testing elements
IEC 611-12	Part 12Graphical Symbols for Diagrams. Binary Logic
IEC 654	Measurement and Control equipment
IEC 751	Industrial Platinum Resistance Thermometer Sensor
IEC 801	Electromagnetic Compatibility for Industrial Process measurement and Control Eqpt.
IEC 902	Industrial Measurement and Control Terms and Definitions
ISA S-5 .1	Instrumentation Symbols and Identification
ISA S-5.2	Binary Logic Diagrams for Process Operation
ISA S-5 3	Graphic Symbols for Distributed Control/Shared Display Instrumentation, Logic and Computer Symbols
ISA-S20	Instrumentation specification formats
ANSI/ISA S 5.1	Process Instrumentation Terminology
ANSI/ ISA S71.04	Environmental conditions
ANSI/ ISA S75.01	Control Valve Equations
ANSI/ ISA S75.02	Control Valve Procedure Capacity Test
ANSI/ ISA S75.03	Face-to-Face Dimensions for Flanged Globe Style Control Valve Bodies
ANSI/	Quality Control Standard for Control Valve Seat
FCI 70.02	Leakage
BS 6020	Instruments for the Detection of Combustible Gases
DIN 3582	Screwed Plugs, Tapped Holes, with Whitworth Part 2Pipe Threads: General Outlay of Types
DIN 43760	Measurement Standard for RTD.
DIN 19243	Measurement and Control Electrical Sensors, Electrical Position Sensors and Signal Converters used for Intrinsically safe two-wire DC System.
EN-50-014/020	Electrical Apparatus for Potentially Explosive Atmospheres
EN 54 Part I	Components of Automatic Fire Detection System Introduction.
EN 5,4 Part 5	Heat sensitive Detectors - Point Detectors containing a Static Element.
ISO 3511.1	Process Measurement Control Functions and Instrumentation Representation Part I: Basic requirements

ISO 3511.2	Process Measurement Control Functions and Instrumentation Representation Part 2: Extension of Basic Requirements.
ISO 3511.4	Process Measurement Control Functions and Instrumentation Representation Part 4: Basic Symbol for Process Computer, Interface and shared Display/Control Systems.
ISO 4200	Plain End Steel Tubes, Welded and Seamless - General Table of Dimensions and Masses per Unit Length.
ISO 5167	Measurement of Fluid by Means of Orifice Plates, Nozzles and Venturi Tubes Inserted in Circular cross-section Conduits Running Full.
API RP 520	Sizing, selection and Installation of Pressure relieving devices in Refineries
API RP 521	Guide for Pressure Relieving and Depressuring System
API RP 2000	Venting Atmospheric and low pressure storage tanks
API- Chapter 5.4 :	Accessory equipment for liquid meters Manual of
Chapter 6.2	Loading rack and tank truck metering system
Chapter 6.6:	Pipeline Metering Systems Measurement
Chapter 12:	Calculation of Standards Petroleum Quantities
2.1 & 12.2	Part 1 and 2
API-RP-550	Manual on Installation of refinery Instruments Part I and Control System
ANSI - B 16.104	Control Valve seat leakage
ISA-S 75.01	Control Valve sizing
ISA S 18.1	Specifications and guides for the use of general Annunciators.
IEC 529	Environmental Protection of equipment
ANSI B 2.1	Pipe threads
ANSI B 16.5	Steel pipe flanges, flanged valves and fittings
IEC 79.11/	Intrinsic safety code and practice
IEC-79.14	International Boiler Regulation
IS 2148	Flameproof enclosure of electrical apparatus

3.0 UTILITIES

Utilitiesshallbeprovidedatonepointwithinbatterylimit.Furtherstepdownordistributionshallbein thescopeofpackagebidder.

Referutilitydatadocumentattachedelsewhere.

Biddermustmentionrequirementoftheutilitiesin theirbid.

4.0 AREACLASSIFICATION

NonHazardous

5.0 SCOPEOFWORK

Scopeofworkforinstrumentationshallincludebut not limitedto thefollowing :

Design, engineering, procurement, fabrications, supply, inspection, testing, painting, transportation,storage&handlingat site,calibration,erectionandcommissioningof complete instrumentationalongwithaccessoriesasperthe scope.

Howeverthisdoesnotabsolvesbiddersoftheirresponsibilityforguaranteedperformanceofthesystem asperthe requirementofthepackage.Basedontheirexperience,biddermayindicateadditionalinstrum entation,whichisrequiredfororderlyfunctioningofthepackage,inthebid.

Deviations/proposedinclusionstothebasicspecificationsshallbeclearlylistedoutinthebid.

6.0 INSTRUMENTANDCONTROLPHILOSOPHY

Main monitoring and control shall be accomplished by principal's PLC CONTROL Panel. Bidder shall provide the Local control panel for process control, Interlocks and emergency shutdown for the safe operation and shutdown of the plant. The local control panel shall accommodate all the control and monitoring instruments for monitoring and control from the package unit local control panel and also with alarm annunciations, pushbuttons, switches, MCB, isolation, power distribution, wiring etc.
Bidder shall be fully responsible for supplying package unit complete with design, engineering, selection of materials, sizing and selection of instruments.

Packagevendorshallberesponsibleforlocalinstruments,controls,localpanels,installation &wiring,trays&cablelaying&terminationtojunctionboxeswithinthebatterylimit.Bidder'sscopeshallco verterminationofmulti-corecableinthejunctionboxeswithinbatterylimitandidentificationofmulti-corecableinControl Panel.

7.0 INSTRUMENTATIONDESIGNCRITERIA

7.1 Environmental protectionshallbeIP65(NEMA4X)forelectronicinstrumentsandIP55for temperatureandpressuregauges.Allfieldinstrumentsshallbetropicalised,verminproofandsuitablefo r salineatmosphere.Specialcareshallbetakenfor corrosiveservices.

7.2 Transmittersshallbeelectronic2wiretype,output4-20mAdcwhereverapplicable

7.3 Pneumaticsignal20to 100 kPashallbeconsideredwhereverapplicable

7.4 Field switches with hermetically sealed contacts shall be closed in normal operating condition (Open to Alarm).

8.0 FIELDCABLINGJUNCTIONBOXESANDGROUNDING

8.1 Separatejunctionboxesshallbeusedfor4-20mA,contacts(fieldswitchesandsolenoids),mV(Thermocouple),RTD and powercables wherever applicable.

8.2 Shieldsonallcablesshallbeterminatedat controlsystemI/O rackor panel.Thiswillserveassinglegroundpoint.

8.4 Separatetraysshallbeusedforsignalcables,powercablesandthermocouplecables.A

minimumseparationdistanceof500mmshallbemaintained.

8.5 Fibreopticscableshallbeconsideredfor longdistanceoutdoorsignalstransmission.

8.6 Singlepair(IS)instrumentcablesshallbeoffollowingspecification

a)Conductormaterial :Electrolyticgradeuntinnedstrandedcopper,crosssectionalarea 1.5 mm².

b)Insulationmaterial : Low DensityPolyethylene(LDPE >0.925gm/cm3 at20°C), Thickness>1mm.

c)Shieldingmaterial :AluminiumMylar,0.05mmthickness,overlapping50%

e)Drainwire : Annealedfinecoppermaterial

f) Innersheathmaterial: PVC TypeST2

Thickness0.5mmg)Armouring :

Galvanizedsteelwire0.9mmdia

h)OutersheathmaterialExtrudedPVCST2withFRLS(FireRetardantLowSmoke) properties ,Thickness1.4mmj)

ConductorResistance:<12.3ohms/KM

k)MutualCapacitance

:<250picofarad/meterl)Mutualinductance

:<1miliHenry/KM

m)L/R Ration :<40microHenry/ohm

n)InsulationResistance:5000Megaohm/KM

8.7 ThermocouplemV signalshallbetransmittedthroughextensioncableandshallbeindividually shielded.RTDcablesshallbecopperconductorindividuallyshieldedtriads.

8.8 Cableandconduitsshallbenumberedatbothendsasperprincipal'snumberingsystem.

8.9 Colourcodefor variousinstrumentcablesshallbeasbelow

TypeofCable	Outersheathcolour	Pair/Triadcolour
Power	Black	Live:Black Neutral:White Ground:Green
Signal Discrete24 VDC (Fieldswitches/Solenoid)	DarkBlue	(+)Black (-)White
RTD	LightBlue	(+)Black (-)White (C)Red
Thermocouple	LightBluewith YellowBandat500MMInterval	(+)Yellow (-)Red

9.0 INSTRUMENTATIONREQUIREMENT

9.1 Each instrument and Junction box shall be identified by unique tag no.

9.2

Pressuregaugesshallbeofindustrialsafetytypewith SSbourdonandsolidfront(pointerandshatterproofglassisseparatedfrombourdonwithsoliddisc).Dialsizeshallbe150mmwithstainlesssteelcasi

ng.Processconnectionshallbe½"NPTM.WeatherprotectionshallbeIP55.
Pressuregaugesforvibratingserviceslikepump/compressordischargeshallbeglycerinfilledtypeorwithpulsatingdampenerdevice.

9.3 Diaphragmsealtypepressuregaugesshallbeconsideredforcorrosiveservices (if applicable).Diaphragmmaterialand internalsparts/movementshallbeSS316.

9.4 Dialthermometers,ingeneral,shallbeeveryanglebimetallictypewith150mmdialsizeandstainlesssteelbodyparts.WeatherprotectionshallbeIP55.

9.5 Levelgaugeglassshallbereflexormagnetictype,ingeneral.Levelgaugesshallbesuppliedwithpairofoffsetshutoffvalveswithballcheck.Levelgaugesshallbeprovidedwithdrain/ventvalves.Useoftubulargaugesshallnotbeacceptable.Specialcareshallbetakenforgaugesoncorrosiveservices.

9.6 PressureTransmitters anddifferential pressuretransmitters shallbeinherentmotion-freetypeofthefloatingdifferentialcapacitance/inductanceorpiezoelectricprinciple. BodiesshallnormallybeinstainlesssteelwithpressureelementsinAISI316.ForPressureelementsinausteniticstainlesssteelisarequirementinhydrogenservice.Two-valve/three-valveintegralmanifoldof316SSmaterialingeneralshallbeusedwithpressure/dPtransmitter.'SMART'typetransmitterscompatiblewithDCSwillbeused.OverallaccuracyforSmartTransmittershallbe±0.07 % orbetter.Processconnectionshallbe1/2"NPT.

9.7 Thermocouplesshallbethesheathedtypewithhighpuritymagnesiumoxideinsulation. Thehotjunctionshallbeisolatedfromground. Sheathdiametershallnormallybe6mm(1/4")Inconel600sheathmaterialshallbeusedfordesigntemperatureabove400deg.C,whereasordinarySSmaterialcanbeusedbelow400deg.C. Thenominalwirediametershallbeapprox.0.19 xsheathOD.TypeKthermocouplesshallbeusedunlessstatedotherwiseondrawingsorspecifications. Alltemperatureelementsshallbeduplextype.

9.8 Thermo wells shallbefabricated outofSS316 barstockingeneral.Immersionlengthof thermo wellsshallbestandardizedto 200mm in caseofpipeand400mm in caseofvessels.

9.9 Orificeplateshallbeconcentricsquareedgedtype.MaterialshallbeSS316unlessspecialmaterial isrequiredforservice.CalculationsanddimensionsoforificeshallbefollowedinaccordancewithISO5167.StraightrunrequirementshallcomplyASMEMFC3MorAPIchapter14usingabeta(d/D)ratiobetween0.2to0.7.

9.10 Bypassrotametersshallbeprovidedforlocalflowmeasurementwhereverapplicable.Theassemblyshallbecompletewithorificeassembly,interconnectingtubingandfloatchamber.Thechambermaterialshallbe SS316.Scaleofrotametershallbelinear.

9.11 Pressure/Safetyreliefvalvesshallbedesignedin accordancewith API RP520.

9.12 Controlvalvesshallbewithpneumaticdiaphragmorpistonoperatedactuators.PneumaticpositionerandI/Pconvertershallbeincluded. SeatleakageclassshallbeminimumIVinaccordancewithANSI B16.104

Pneumaticpipingandfittingshallbeofstainlesssteelmaterial.Tubesizeshallbe6mmor12mmdependingontheactuatorsize.Castironorductileironbodiesshallnotbeusedforcontrolvalves,regulatorsandlevelinstruments.Compositenoiselevelshallbelessthan85dBA.Nonstandardsizeslike1-1/4",2-1/2",3-1/2",5"and ratingslike 125#,250#shallnotbeacceptable.Forvalveshavingpipetobodysizeratiomorethan2:1,principal'sapprovalshallberequired.Handwheelshallbeprovidedformanualoperation.

9.13 Conductivityanalysersshallbeofintrinsicsafedesignsuitableexecutionclassspecified. Probe installation shall be flow through type with online replacement facility. Automatic temperaturecompensationshallbeavailable.SensorbodymaterialshallbeSS316.Integral2 wire4-20mAoutputtransmittersshallbeprovided.Mountingaccessoriesshallbeincluded.Accuracyshallbe ±1%orbetter.

9.14 For pH / ORP measurement, electro-chemical sensorwithintegral transmitter shallbeprovided. Installationshallbeflowthroughtypewithonlinereplacementfacility.Automatictemperaturecompensationshallbeavailable.SensorbodymaterialshallbeSS316. Integraltransmittersshallbe2wire4-20mAoutputtype.Mountingaccessoriesshallbeincluded.Accuracyshallbe±1%orbetter.

9.15 Fullyimmersibletypeturbiditysensorwithintegraltransmittershallbeprovided.Installationshallbeflowthroughtypewithonlinereplacement facility.SensorbodymaterialshallbeSS316. Integraltransmittersshallbe2wire4-20mAoutputtype.Mountingaccessoriesshallbeincluded.Accuracyshallbe±1%orbetter.

9.16 Solenoidvalvesshallbe24VDCintrinsicsafewithstainlesssteelbody.CoilinsulationclassshallbeHasperNEMA.Ventsopentoatmosphereshallbeprovidedwithinsectscreens.Manualoverridefacilityshallbeprovidedforoperationfrom thefield.

9.17 LocalControlPanel

Localcontrolpanelandaccessories,ifany,shallbeinthescopeofpackagesupplier.Thedesignofpanelshallbeselfsupportedtype a n d panelshallbefabricatedoutofcoldrolledsteelsheetof4mmthickforfrontand3mmthickforsideandbackand2mmfortop.Panelshallbesuppliedintegrallybolted100x50x6mmthickMSchannelbase.Antvibrationpadsshallbeprovided.Cableentriesshallbefrombottom.

9.18 Identificationandmarking

Selfadhesivetapesorsignsarenotpermissible forpermanent marking ofanyinstrument. Nameplatesshallbelamicoidwith6mmminimumsizeblacklettersonwhitebackgroundandidentifiedwiththeirrelevantloop.Eachinstrumentshallbefitted withaSStagplateandshallcontainthefollowinginformationasminimum.

Manufacturer'sname,serialno. and model
Tag no.
Sizes,Rating
Range
Certification

Other relevant information as per manufacturer's standard for proper identification of the instrumentsshallbeprovided.

10.0 ERECTION&COMMISSIONING

Erectionandcommissioningactivitiesatsite shouldbecarriedout strictlyasper theQuality AssurancePlan(QAP)approvedbyPrincipal.Vendorshallberesponsibleforobtainingtheapproval ofQAPpriorto startofsite activities.

PleasereferAPPENDIX-1forinstrumenterectionmaterialand connectiondetails.

10.1 ERECTIONMATERIAL

10.1.1 Allerectionmaterialrequiredforinstallationandcommissioningoftheinstrumentswithinthebatter ylimitshallbeincludedinthescopeofbidder.Packagevendorshallarrangenecessarytoolsand tacklesrequired.

10.1.2 Junctionboxesandcableglands
Vendorshallsupplyjunctionboxeswhereverrequired.Configurationshallbe6/12inlet(1/2”NPT) andoneoutlet(1”/1.5”NPT).Junctionboxesshallbeoffiberglassultravioletproof/stainlesssteelbodyan dshallbeweatherprooftoIP65(NEMA4X).Terminals shallbescrewedtypeandcertifiedforintrinsicsafeapplication.Explosionproofjunctionboxesshallbe usedwhereverrequired.Cableentriesshallbefrombottom.Telephoneshoeshallbeprovidedinjuncti onboxes.30%spareterminalsandminimum2nos.spareentryshallbeavailableinjunctionboxes.Cab leglandsshallbedoublecompressiontypeandmaterialshallbeSS.Instrumentsidecableglandsizesh allbepreferably½”NPT M.

10.1.3 InstrumentValvesandManifolds

Vendorshallsupplyinstrumentvalves(miniaturetype)andvalvemanifoldswhereverrequired.Bodym aterialandratingshallbeasperpipingclassorSSwhicheverisbetterandshallbeforgedtype.Valve trimmaterialshallbeSS316asminimumorsuperiorasrequiredbyprocessconditions.

ForallDPtransmittersimpulsepiping,3-wayintegralmanifoldsshallbeused.Forpressure transmitters,2wayintegralmanifoldshallbeused.Gaugecockwithventconnectionshallbeusedforpr essuregauges.

10.1.4 ImpulseTubing

SS 316tubes ofsize½ “shallbeusedfor impulsetubing.

10.1.5 Tube Fittings

SS316tubefittingsofSwagelok/HokeGyrolok/ParkerHannifinmake ofsuitableratingsshallbesupplied.

10.1.6 Instrument Airlinesfittings&Valves

AllpipesandpipefittingsforairlineshallbeofSS304material.TubesforairlinesshallbeSS304 andsizeshallbe6mmor12mmwiththicknessof1mm.VendorshallsupplySwagelok/Parker Hannifin type compression fittings of SS316 material. The ferrulehardnessshallbegreaterthan90RC.

10.1.7 Cabletrays.

Aluminiumperforatedcabletraysof3mmthicknesswithaluminiumcovershallbeused.Suitablecable clampsmadeofaluminiumshallbesuppliedforbindingthecablesatevery 500mm.Nutand boltmaterialshallbeofstainlesssteel.

10.1.8 Instrumentsupport/structuralsteel

Vendorshallsupplyinstrumentstands,stanchionsandotherstructuralsteelmaterialrequiredforsupportingthecabletrays,impulselinesandinstruments.

10.2 INSTALLATION

10.2.1 Alldirectmountedinstrumentslikethermocouple,thermo well,temperaturegauges,pressuregauges; pressure switches etc. shall be installed in such a way that they have betterreadabilityandaccessibility.Locationoftheinstrumentshallbeselectedinsuchawaythattheiraxis is1.4Meterfromthefloorofthe platform.Packagevendorshallprovideallthenecessaryplatformsandladdersfor maintenanceofthe instruments.

10.2.2 Localinstrumentsthatarenotlinemountedshallhaveinstrumentsupportsecurelyanchored,ofrigidconstructionand¼"holeabovethebaseplate.Plugandsealatthetopofthepipetoprevent waterentry.Ifpossible,multipleinstrumentsinacloseproximitymaybesupportedbyacommonsupport.

10.2.3 Allcapillarytypeinstrumentsshallhavepropercapillarysupporttoprotectcapillaryagainst mechanicaldamages. All capillarytypeinstrumentsshallhave3"flangeofrating300#RF.

10.2.4 Allpressure,differentialpressureinstrumentsshallbeprovidedwithblockandbleed,bypass,drain/vent valvesetcaspertheinstallation sketchesapproved byownerandshallhaveaccessibility.3waymanifoldforflow transmittersshallbeintegraltype.

10.2.5 All primarypiping(impulselines)shallhaveaslopeof1:10onthehorizontalrun.

10.2.6 Allweldingshallbecarriedoutaspertherelevantcodewithproperelectrodes. Anytesting (non-destructive)likeDP testonrootweldandfinalweldshallbecarriedoutasapplicable. All consumablesshallbepartofvendor'sscopeofsupply. Anypreorpostweldtreatmentasrequiredbythecodesshallbecarriedout.Highpressurelinesshallbeprovidedwithminimumjoints.

10.2.7 Weldedareas,drilledholesandpipethreadongalvanisedpipestandsshallbepreparedandspreadwithcoldgalvanisation.

10.2.8 AllthreadedjointsbyTeflontapesonly.

10.2.9 All impulselinesshallbesupportedatregularintervalswith'U' clamps.

10.2.10 Instrumentdrain/ventconnectionsshallbepipedtosafearealikeOWS(oilywatersewer)orabovepiperacksto avoidaccumulationofhazardousfluidin theplantatmosphere.

10.2.11 Alllevelgauges/transmitters tobeprovidedwithdrainconnectionatgroundlevel.Externalstandpipeshallnot beusedforlevelmeasurementoffluidservicesbelow–40°C.

10.2.12 Steamtracing,whereverrequired,shallbecarriedoutby6mmOD1mmthickSStubes,and condensatetrapsshallbeprovidedtocollectallthecondensateandshallbepipedtothenearestpipedrainfunnels.

10.2.13 Alltubes/cablesshallbeproperlylaidoncabletrays,whichshallbesupportedatregularintervals.

10.2.14 Separateroutingorphysicalseparationshallbemaintainedbetweensignalcablesandshutdown/powercables.

10.2.15 Whereverintrinsicallysafesystemcablingisemployedtheminimumseparationof200mmshallbeadheredto betweenIS andNon-ISsignalcables.

10.2.16 Instruments insteam, liquidorcondensing services shallbelocated belowtheprocess connection. For gas and non-condensing vapours, instruments shall be located aboveprocesspoints.

10.3 TESTINGANDCALIBRATION

10.3.1 All impulse lines shall be properly flushed after isolating both the instrument and the vessel/piping.Onlineinstrumentsshouldberemoved/ isolatedduringflashingoflines.

10.3.2 Allimpulselineshallbetestedhydraulicallyat1.5timesthemaximumoperatingpressure. Ensurethatinstrumentandvessel/pipingisisolatedduringthistest.

10.3.3 Incaseofspecialconditionswherehydrotestingisnotpermitteddue toserviceconditions,theimpulselinestestingshallbecarriedout byusingairornitrogen.

10.3.4 All external cage type level instruments shall also be tested up to 1.5 times operatingpressure.

10.3.5 Afterpressuretesting,alltheseimpulselinesshallbedrainedand driedwithdry airto removeanymoisture.

10.3.6 Instrumentairlinewillbeservicetestedonlyforany leakafterpressurizingandisolatingthe mainrootvalve,bysoapsolution.

10.3.7 Allinstrumentcablesshallbetestedforcontinuityandinsulation.Whilemeggerisusedforinsulation testing,ensurethatinstrumentsandzenerbarrierareisolatedatbothends.

10.3.8 All instrumentssuppliedbythevendorshallbecalibratedusingpropertestequipment.

10.3.9 Allinstrumentsshallbecalibratedfor0%,25%,50%,75%,100%andvice versa.

10.3.10 All temperaturegaugesshallbecalibratedusingtemperaturebaths.

10.3.11 Allthermocouplesshallbecalibratedasperinstrumentranges.

10.3.12 Alltransmittersshallbecalibratedasperinstrumentranges.

10.3.13 All displacer type level transmitters shall be calibrated with water or suitable fluids andcorrectedfor specificgravity.

10.3.14 All alarmand tripswitchesshallbecalibratedovertheentirerangeand finallyset and checkedforalarmtrip/pointsandresetpointsasperthealarm/tripsetpointschedule. Aftersettingtheseshallbesealed.

10.3.15 Allcontrolvalvespriortostrokecheckingshallbeexternallycleanedthoroughly. Thefullstrokeofvalveshallbechecked foropening andclosing. Anyadjustmentsrequiredfor obtainingfull strokeand reducinghysterisisshallbecarriedout.

10.3.16 Bubbletightshut-offcontrolvalvesandshutdownvalvesshallbecheckedforseatleaktestandglandleak test.

10.3.17 Solenoidvalveshallbecheckedfunctionallyforitsoperation.

10.3.18 Safetyvalvesandreliefvalvesshallbeset/testedbyusingdryair/nitrogen,leakage,ifany,shallberemov edbyproperlappingofseatand disc.

10.3.19 All fieldinstrumentshallbecalibratedasper themanufacturer'sinstruction.

10.3.20 Afterperformingthecalibrationofallinstruments,theentireloopshallbecheckedforproperoperationth roughprincipal'sDCSsystem.

10.3.21 Theentireshutdownschemeshallbesimulatedfromtheprocesstripswitchesandtheschemeshallbet estedforitsproperoperationthroughprincipal'sESDS, priortostartupoftheunit.

10.4 COMMISSIONING

10.4.1 Thisactivityshallbecarriedoutinasystematicmannersoastoavoidanyaccidenttoplantand operatingpersonnelasper theagreedprocedurebetweenvendorand owner.

10.4.2 Duringtheplantstartupalltheinstrumentscalibration,controlleralignment,trippointsettingsshall betrimmedsoasto meetthe operationrequirement.

11.0 SPARES

Sparesshallbeconsideredalongwithmainsupplyfortheinstrumentationwithinbatterylimit.Biddersha llquoteunitratesofspareinthebid.Howeveractualquantityshallbedecidedbyprincipalatthetimeoford

er.

Pleasereferattachment"SpareGuidelinesForInstruments"documentno. (PC94-PNIN-SP-01)forthedetailsofsparesrequirements.

12.0 TESTINGANDINSPECTION

Allinstrumentsandaccessoriesshallbeinspected&testedtoascertainthatthesupplyisin accordance withapprovedspecification.Theinspections&testsshallnotrelievethesupplier/ manufacturerfromhisresponsibilitiesformaterialsandtheperformanceoftheequipmentsupplied.

WithintwoweeksofreceiptoftheLetterOfIntent(LOI)/order,vendormustcontacttheInspectionAgencyspecifiedintheorderandfinalisewiththemtheQualityAssurancePlan(QAP) for carrying outInspectionandtest.

InabsenceofanyInspectionAgencythevendormustsubmitthequalityAssurancePlanfor principal's approval. All tests, in such cases, shall be conducted by original equipment manufacturer'squalitydepartmentandtheresultsoftestsshallbeforwardedalongwiththesupply.

Procedure andextent oftests shallbegoverned byQAP mutuallyagreedbetweenthepackagevendorand principal'sinspectionauthority.

Noassemblyshallbeshippeduntilalltherequiredtestsaresuccessfullycompletedandcertified"Clearedfor despatch"bythe inspectionauthority.

13.0 PACKAGINGANDIDENTIFICATION

13.1 Instrumentsshallbepackedinordertoprotectthemfrommoisture,rain,rust,corrosionandvibration so as to withstand numerous handling during sea / air voyage and inlandtransportationandensuretheirsafearrivalandstorageatplantsiteduringfullguaranteeperiodwithoutany risk ofcorrosion,rustingorcorrosiondue to humidand hot climate.

13.2 Items shallbepackaged toprevent damage due torough handling. Items inthe same packagingshallbeseparatedusingwoodenstripsorsuitablematerialtopreventthedamageduetorubbing.

13.3 Allitemsshallbefreefromdustandmoistureoranyforeignmatterbeforepackaging.AllItems/components shallbesleevedinpolyethyleneandheat-sealedorpackedinwaterproofvapour-tight package. Ends shall be protected and openings shall be sealed to preventingressofmoistureorforeignparticles.

13.4 Itemssubjecttodamagebywaterorhumidityshallbepackedinwaterproofvapourtight containers.

13.5 Spareshallbepackedseparatelywithpropermarkingas"SPARE".

13.6 Knockeddownitemsshallbepackagedand shippedtogetherto thepossibleextent.

13.7 Electronicinstrumentsshallbegivenadditionalprotectionagainstthedustandmoistureandshall bewrappedin opaqueairtightplasticcoversecuredwithtapeasapplicable.

13.8 Anticorrosivematerialcoatingshallbeappliedwhereverapplicabletoavoidrustingoftheexposed

partsand internalsurfacesshallbeprotectedbyvapourinhibiters.

13.9 Allcrate,skidsandpalatesshallbesuitableforusewithforkliftsandshallbesuitableforrail,truck,barrageorshiptransport.

13.10 Shippingdetailsindicatingorderreferenceshallbeappliedtothetopandtwooppositesidesofthepackage.

13.11 Liftinginstructions,cautionsigns,liftinglocationsshallbeclearlymarkedontheshipment. Fragileareasshallbemarkedas"**DONOTLIFTHERE**".Itemswithweightmorethan9000 KGshallbemarkedwith"**CENTRE OFGRAVITY**".

13.12 Pictorialsignslike"**FRAGILE**","**THISSIDEUP**","**KEEPDRY**","**SLINGHERE**","**STOREINAIRCONDITIONINGENVIRONMENT**"etc.shallbe properlystencilledon thepackageasperthenationallanguageofcountryoforiginanddestination.Sizeofsymbolsshallbeinproportionto the sizeofconsignment.

14.0 INSTRUMENTSUBVENDOR

Allinstrumentation coveredinthepackagevendor'sscope,shallbesuppliedasperthe instrumentvendorlistattachedwiththis document. For items not indicated in the list, principal'sapprovalshallberequired.(Refer: PC94-PNIN-IVL)

15.0 DOCUMENTATION

Pleasereferdocumentationscheduleattachedelsewhere.(PC94-PNIN-ID)

APPENDIX-1

INSTRUMENT ERECTION MATERIAL AND CONNECTION DETAILS

InstCode	InstType	ConnectionSize		Instconn.	Remarks
		OnPipe	OnVessel	Size	
PS	Pr.Switch	0.75"THD	1.50"FLG	0.5"THD	0.75"bypiping
PD(T,I)	Diff.Pr.Trans.	0.75"THD	1.50"FLG	0.5"THD	0.75"bypiping
PI	Pr.Gauge	0.75"THD	1.50"FLG	0.5"THD	0.75"bypiping
PP	Pr.Point(Test)	0.75"THD	1.50"FLG	--	0.75"bypiping

PT	Pr.Trans.	0.75"THD	1.50"FLG	0.5"THD	0.75"bypiping
AE	Analyzerpoint	0.75"THD	1.50"FLG	0.5"THD	0.75"bypiping
			4"FLG	4"FLG	FlueGasDuct
LC	LevelControl	--	1.50"FLG	1.50"FLG	
LG	LevelGauge	--	1.50"FLG	0.75"FLG	0.75"FLGbypiping
LS	LevelSwitch	--	1.50"FLG	1.0"FLG	1.0"FLGbypiping
LT	LevelTrans	--	1.50"FLG	0.5"THD	0.75"bypiping
LT(DISPL)	LevelGauge	--	1.50"FLG	0.75"FLG	0.75"FLGbypiping
FT	FlowTrans	0.5"THD	--	0.5"THD	
TI	Temp.Gauge	1.50"FLG	1.50"FLG	1.50"FLG	
TE	Thermocouple	1.50"FLG	1.50"FLG	1.50"FLG	
RemoteSeal	AllType	3"FLG	3"FLG	3"FLG	
StandPipe	LevelInst.		2"FLG		

Erectionmaterial

Connectionbetweentappingpointto instrumentthroughSS316tubingandtubefittingsofSwagelok/HokeGyrolok/ParkerHannifinmake.

All nuts,bolts&gasketsunderpipingscope.,

INSTRUMENTATION

DRAWING & DOCUMENTATION SCHEDULE

Sl.No	Description	With Bid (Y/N)	For Review/ Approval	For Information	Final/ Approved/ As-built
1	Drawing & document scheduleN	N	Y		Y
2	Instrument Index	N		Y	

3	Instrument sizing calculations (control vales, safety valves & flow elements)	N		Y	
4	Utility requirements	N		Y	
5	Instrument specification/ data sheets for critical items	N	Y		Y
6	Level sketches	N		Y	
7	Material Requisition	N	Y		Y
8	Purchase Requisition	N		Y	
9	Vendor Drawings	N		Y	
10	Functional Schematic	N		Y	
11	Power supply distribution	N	Y		Y
12	Wiring diagram for panels	N		Y	
13	Junction box detail	N		Y	Y
14	Configuration diagram	N	Y		Y
15	I/O assignment	N	Y		Y
16	Instrument cable schedule	N		Y	
17	Instrument location plans	N		Y	
18	Instrument installation drawings	N		Y	
19	Bill of material for installation items	N		Y	
20	Spare part list for :	N			
21	a. Mandatory Spares			Y	
22	b. Start up& commissioning			Y	
23	Inspection & test procedures	N		Y	
24	Complete catalogues with part list for all vendor supplied instruments, control	N		Y	

	etc.				
25	Installation, operation & maintenance manuals	N		Y	
26	As Built Drawings			Y	
27	System Architecure	N		Y	
28	Hazardous Area Classification Drawing	N	Y	Y	Y
29	Guarantee Certificate	N		Y	
30	Instrument test certificates and calibration reports	N		Y	Y

NOTE: Drawing/Documents which are applicable for this job, shall be submitted by the bidder as per above schedule.

SPARE GUIDELINES

FOR INSTRUMENTS

1. Vendor shall quote commissioning spares as well as maintenance and 2 years operation & maintenance spares. The list of spares for (whichever is applicable with package unit) instruments indicated here is a broad guideline, which will not limit the scope of supply. Vendor shall also include other spares for commissioning & 2 years normal operation maintenance.

2. Vendor shall quote all types of cards, subassemblies and general consumables, wherever applicable.

3. Electronic instrument spares must consist of power supply system and other component, fuses etc to the extent of 15%, if not otherwise specified.

4. Vendor shall quote unit price of the spares alongwith the main instrument in the offer. Spares and their quantity will be decided by principal prior to placement of order.

5. The vendor of package unit shall also include 30% spares of erection material such as fittings, isolation valve / drain valve, pipe, tubes, cable, clamps, Junction boxes, compression fittings, spare ferrules for compression fittings etc. in their scope. These spare erection materials shall be clearly indicated separately in the Bill of Materials.

6. In case of special cables such as cables between transducer and preamplifier (speed, vibration, pH etc.) 100% spare cables with end connection (if any) shall be provided by the vendor.

7. Instrument consumed during commissioning and guarantee period shall be replaced free of cost by package vendor.

SL NO	ITEM	2 YEARS OPERATION & MAINTAINACE	COMMISSIONING SPARES
1	Dial Thermometer	10%(min.1 each range/size)	1 of each range
2	Displacer type level transmitter for each model a) Relay assembly./Electronic Head b) Torque tube assembly c) Nozzle assembly d) Restriction orifice assembly e) 'O' rings/gaskets f) Other recommended spares g) Float & chain/link assembly	2 set 1 set 1 set 1 set 5 sets 1 set 1 set	1 set - - - 2 sets 1 set
3	Pr. & DP Transmitter 1.Complete Transmitter a) Sensor module b) Circuit board of each type c) Set of 'O' rings,gaskets & adjustable screws/pots d) Clamps e)Manifolds f)Loop calibrator	10%(min.1 each) 10%(min.1 each) 10%(min.2 each) 20%(min.5 sets) 5% (min.3) 5% (min.3) 2 nos.	10%(min.1 each) 10%(min.1 each) 20%(min.5 sets) 10%(min.5 each) 5%(min. 2) 2 nos.
4	I/P Converter Complete I/P converter	10%(min.1)	5% (min.1)
5	Level Gauge For each model a) Reflex glass with gasket b) Transparent glass with gasket c) Bulb for illuminator	20 % 20 % 20 %	5% 5% 5%
7	Level Switch Float assembly Contact assembly Unit spare	2 sets 4 sets 1 set each	- 2 sets -
8	Pressure Gauge	10%(min.1 each range)	1 of each range
9	DP Gauge	10%(min.1 each range)	1 of each range

10	Pressure Switch	10%(min.1each range/model)	1 of each model

11	Thermocouple assembly/RTD a) Element assembly for each type/immersion length b) Terminal Block Assembly c) Thermowell d) Thermowell of special material e) Element for high temperature/corrosive service	10% (min.2) 10% (min.1) 10% (min.1) 100% 100%	10% (min.1) 10% (min.1) - 10% (min.1) 10% (min.1)
12	Control Valve (Globe) *If Applicable* for each tag Gland packing Gaskets (body,bonnets etc) Piston/seal rings for balanced cage guided valve seat ring Complete trim include seating,plug and stem assembly Soft seating/Lining, if any COMMON SPARES Actuators Diaphragm of different sizes 'O' rings for piston actuator Positioners Complete positioner Recommended spares kit Solenoid valves Complete solenoid valves Solenoid valve coils Repair kit MISCELLANEOUS SPARES Accessories such as air lock,valves, volume boosters,limit switches, check valves, I/P converter, fittings, tubing for actuators. Any other spares recommended by Manufacturer.	4 sets 4 sets 2 sets 1 set 1 set 2 sets 10% (min.2) 10% (min.2) 10%(min.1 each) 10%(min.2 each) 10%(min.1 each) 10%(min.1 each) 10%(min.1 each) 10%(min.2each) 1 set	6 sets 4 sets 4 sets 1 set 1 set 5 sets 10% (min.2) 10% (min.2) 10%(min.1 each) 20%(min.5 each) 10%(min. 1 each) 20%(min.2 each) 20%(min.2 each) 10%(min.2each) 1 set

	b) 'O' ring c) Pressure seal d) Spiral pin e) Cage lock f) Plug with stem g) Plunger h) Cage i) Balancing cylinder	4 sets 4 sets 4 sets 1 set 4 sets 4 sets 1 set 1 set	2 sets 2 sets 2 sets 2 sets - - - -
13	Butterfly Valve for each tag Gasket Piston ring Packing Seat ring Trim Solenoid Valve (Complete unit) Limit switch (complete unit)	 2 sets 2 sets 2 sets 1 set 1 no. 10% 10%	 2 sets 2 sets 2 sets 1 set - 1 no. 1 no.
14	Orifice Assembly For each tag Gasket	 4 nos.	 1 no.
15	Rotameter For each type/ model Indicator assembly (pointer, cover & gasket)	 10 %	 -
16	Magnetic flowmeter Complete electronics Set of fuse	 1 set 1 box	 - 1 box
17	Ultrasonic flowmeter a) Sensor b) Amplifier / power card c) Set of 'O' rings & gaskets d) Other spare parts recommended by manufacturer e) Safety valve unit for critical equipment.	 1 no. 1 set 2 sets(tag wise) 1 set 1 set each	 - - 1 set(tag wise) 1sets 1 set each

18	PLC Hand held calibrator Bus interface unit Discrete Input module Discrete Output module Analog Input module Analog output module Power supply module Relays	 1 no. 1 no. 3 nos. 4 nos. 1 no. 1 no. 1 no. 5 nos.	 1 no. 1 no. 1 no. 1 no. 1 no. 1 no. - 1 no.

VENDOR LIST

(INSTRUMENTATION)

INSTRUMENTATION:

Sl.No	Vendor's Name	Country
1. pH, conductivity & ORP Analyser		
1	Endress+ Hauser (India) pvt. Ltd. (Liquid Analyser)	India
2	ABB India Limited	India
3	Yokogawa Electric Corporation	India/
4	Hach company	India/
2. Flow Element: Orifice/ Venturi/ Flow Nozzle		
1.	Baliga Lighting Equipments Limited	India
2.	General Instruments Consortium	India
3.	Micro Precision Products Private Ltd.	India
4.	Minco India Flow Elements Pvt Ltd	India
3. Magnetic Flow meter		
1.	Emerson Process Management (I) Pvt. Ltd.	India
2.	ABB India Ltd.	India
3.	Endress + Hauser (India) Pvt. Ltd.	India
4.	Krohne Marshall Pvt. Ltd.	India
5.	Siemens Ltd.	India
6	Yokogawa	India

Sl.No	Vendor's Name	Country
4. Pressure Gauges		
1.	A N Instruments Pvt. Ltd.	India
2.	General Instruments Consortium,	India
3.	H.Guru Industries	India
4.	Precision Industries Ltd.	India
5.	Ashcroft India(P) Ltd.	India
5. Pressure & D/P Transmitters		
1.	Emerson Process Management (I) Pvt. Ltd.	India
2.	Honeywell Automation India Limited	India
3.	Yokogawa Limited	India
4.	Siemens Ltd.	India
5	Endress + Hauser (India) Pvt.Ltd.	India
6.	ABB	India
6. Vol. Seal Pr./Dp Transmitter including Urea Grade		
1.	Honeywell Automation India Limited	India
2.	Yokogawa Limited	India
3.	Siemens Ltd.	India
4.	ABB India Limited	India
5.	Emerson Process Management (I) Pvt. Ltd.	India
6.	Endress+ Hauser (India) Pvt. Ltd.	India
7. Transparent/ Reflex / BicolorMag.Level Gauges		
1.	ChemtrolsSamil(India) Pvt Ltd.	India

Sl.No	Vendor's Name	Country
2.	Pune TechtrolPvt.Ltd.	India
3.	Tecnomatic (India) Pvt. Ltd.	India
4.	Bliss Anand Private Ltd.	India
5.	CesareBonetti	India
6.	Nihon Klingage Co. Ltd.	India
7.	Clark-Reliance Corp.	India
8. Displacer Type Level Transmitters		
1.	ChemtrolsIndustries Limited	India
2.	Dresser Valve India Pvt Ltd	India
9. Temperature Elements (Thermocouple, Rtd)		
1.	Altop Industries Ltd.	India
2.	Pyro Electric Instruments Goa Pvt. Ltd.	India
3.	Tempsens Instruments (I) Pvt. Ltd.	India
4..	Electrical & Electronics Ltd	India
5.	General Instruments Consortium	India
6..	Industrial Instrumentation,	India
7.	Endress + Hauser (India) Pvt. Ltd.	India
8.	Goa Instruments Industries Ltd	India
10. Dial Thermometer (Hg In Steel/Glass)		
1.	A N Instruments Pvt. Ltd.	India
2.	General Instruments Consortium,	India
3.	H.Guru Industries	India

Sl.No	Vendor's Name	Country
4.	Waaree Instruments Ltd	India
5	Ashcroft India(P) Ltd.	India
6.	Goa Instruments Industries Ltd	
11. Temperature Transmitters		
1.	ABB India Limited	India
2.	Endress+ Hauser (India) Pvt. Ltd.	India
3.	Siemens Ltd.	India
5	Emerson Process Management (I) Pvt. Ltd.	India
6	Honeywell Automation India Limited	India
7	Yokogawa Limited	India
12. Globe / Angle Valves (Normal Type)		
1.	Dresser Valve India Pvt Ltd	India
2.	Emerson Process Management India Ltd	India
3.	Instrumentation Ltd. (Palakkad)	India
4.	Mil Controls Limited	India
5.	Samson Control Pvt Ltd	India
6	Flowserve india control pvt. Ltd.	India
7.	Koso fluids controls pvt. Ltd.	India
13. Butterfly Valves (Normal Type)		
1.	Tyco Valves & Controls (I) Ltd	India
2.	Virgo Engineers Ltd.	India

Sl.No	Vendor's Name	Country
3.	Flowserve india control pvt. Ltd.	India
4.	Koso fluid controls (pvt.) ltd.	India
5	Bray Controls	India
14. Solenoid Valves		
1.	Asco (India) Limited	India
2.	Festo	India
3.	IMI Norgren-HerionFluidtronicGmbh&Co.	India
15. Air Filter Regulator		
1.	ShavoNorgren(India) Pvt Ltd.	India
2.	Emerson	India
3.	As per control Valve manufacturer	
16. Limit/Proximity Switches		
1.	Pepperl + Fuch	India
2.	Honeywell Inc.	India
17. Safety Valves & Thermal Relief Valves (Normal Make)		
1.	FaingerLeser (P) Ltd..	India
2.	Tyco Sanmar Ltd.	India
3.	Bliss anand private limited	India
18. Rupture Discs		
1.	BS&B Safety Systems (India) Limited	India
2.	Fike Europe	India
19. Marshalling Panel / Control Panel of Control System		
1.	Rittal.	India

Sl.No	Vendor's Name	Country
20. Other Panel		
1.	Rittal.	India
2.	Electronics Corporation Of India Ltd	India
3.	Industrial Control Appliances (P) Ltd.,	India
4.	Jaisun&Hutchisun Controls Ltd.,	India
5.	Pyrotech Electronics Pvt.Ltd.	India
6	United Electric Co. (Delhi) Pvt. Ltd. (Upto 10 Mtrs.)	India
7	Yokogawa Limited	India
8	Instromet International N.V	Holland
9.	Prima automation (India) PVT. LTD.	India
10.	TAN SWA technologies Inc	
21. Panel Access. (Relay,Switch,Lamp,Terminal,Push Button)		
1	Larsen & Toubro Ltd.(Control& Automation (Lamp, Push Button)	India
2	Rockwell Automation India Ltd. (Relays)	India
3.	EconixHi-TECH Components Pvt. LTD. (For Terminal Blocks & accessories Only)	India
4.	Elmexcontrospvt. Ltd.	India
5.	Paramount	India
6	Phoenix contact (india) pvt. Ltd. (for terminal blocks)	India
7	M/s Powercam Electricals Pvt Ltd (Pilot lamp, Push button)	

Sl.No	Vendor's Name	Country
22. Programable Logic Controller - Package		
1.	Ge Fanuc Systems Prvitate Limited	India
2.	Honeywell Automation India Limited	India
3.	Rockwell Automation India Ltd.	India
4	Siemens Ltd.,	India
5.	ABB India Limited	India
6.	Emerson Process Management (I) Pvt. Ltd.	India
7.	Rockwell automation India Pvt. Ltd	India
8	Yokogawa	India
23. I/P Converter		
1.	Emerson Process Management (I) Pvt. Ltd.	India
2.	Invensys (Foxboro)	India
3	Yokogawa Limited	India
24. Instrument Power & Control& Extension & Compensating Cables Cables		
1.	Associated Cables Ltd.	India
2.	Associated Flexibles & Wires Pvt. Ltd.	India
3.	Cords Cable Industries Ltd.	India
4.	Kei Industries Limited	India
5.	T C Communications Pvt Ltd	India
6.	Thermo Cables Limited	India
7.	Udey Pyro Cables Pvt Ltd	India

Sl.No	Vendor's Name	Country
25. Cable Trays & Accessories (Al./Gi)		
1.	Globe Electrical Industries	India
2.	Indiana Engg Works Pvt Ltd	India
3.	Metalite Industries,	India
4.	Parekh Engineering Company	India
5.	Sadhana Engineering Corporation	India
6.	Steelite Engineering Limited	India
26. Junction Box & Cable Gland		
1.	Baliga Lighting Equipments Limited	India
2.	Ceag Flameproof Control Gears Pvt.Ltd.	India
3.	Flameproof EquipmentsPvt. Ltd.	India
4.	FlexproElecticals Pvt. Ltd.	India
5.	Trinity Touch Pvt. Ltd. (	India
27. Pipes		
1.	As per piping list	
28. SS Tubes		
1.	Swagelok	India
2.	Parker	India
29. Pipe Fittings		
1.	As per piping list	India
30. Compression Fittings		
1.	Aura Inc	India

Sl.No	Vendor's Name	Country
2.	Baldota Valve & Fitting Co.Pvt.Ltd.	India
3.	Excel Hydro-Pneumatics Pvt Ltd,	India
4.	Excelsior Engg Works	India
5.	Panam Engineers	India
6.	Precision Engineering Industries	India
7.	Reliance Engg. & Electrical Corpn.	India
8.	Arya Crafts & Engineering Pvt Ltd.	India
9.	Fluid Controls Pvt Ltd	India
10	Wesmec Engineers Pvt. Ltd.	India
31. Instrument Miniature Valves		
1.	Audco India Limited(L&T Valves Divn.)	India
2.	Aura Inc	India
4.	Chemtrol Industries Ltd	India
5.	Excel Hydro-Pneumatics Pvt Ltd,	India
6.	ChemtrolsSamil(India) Pvt Ltd	India
7.	Hyd- Air Engineering works Lonavla	India
8.	Excelsior Engg Works	India
9.	Ksb Pumps Limited (Valves Divn)	India
10.	Panam Engineers	India
11.	Tecnomatic (India) Pvt. Ltd.	India

Sl.No	Vendor's Name	Country
32. Instrument contractor for inst. Construction /erection works		
1.	Instrucon engineers and controls (I) Pvt. Ltd (upto 0.5 crores)	India
2.	Jasubhai engineering pvt. Ltd.	India
3.	L&T	India
4.	Miraj instrumentation service (upto 0.5 crores)	India
5.	Pace process control pvt. Ltd.	India
6.	Petron engg. Construction ltd.	India
7	Technimont ICB ltd.	India
8.	M/s Godrej & Boyce mfg. co. ltd	India

Interconnecting Piping and Valves:

Please refer the Indicative P&I diagram enclosed with this tender document for details of the same.

Piping:

In general, the following piping specifications will be adopted:

Process Piping – Low pressure lines	Rigid UPVC m.o.c. of approved ISI make – Finolex / equivalent
Process Piping – High Pressure Lines	R.O. stage 1 & 2 High Pressure Pump discharge, R.O. stage 1 & 2 feed lines, R.O. Stage 1 & 2 reject lines upto reject control valve will all be in SS316 SCHEDULE 40 / 80 as required.
Dosing systems	Suction of dosing pumps will be flexible Teflon / rigid PVC Discharge will be rigid PVC
Note: Process parameters may vary w.r.t. to Langlier Index of the liquid conveyed and hence metal pipes have been consciously avoided.	

Valves:

- In general the following valve specifications will be adopted:
- All valves provided shall be of approved make confirming to relevant IS specifications on material of construction and sizing criteria.
- All process pumps discharge will have NON RETURN VALVE (except high pressure pump).
- All process flow control lines (other than solenoid valves) will be generally PVC /PP Ball Valves as the pipe size does not exceed 150 NB and due to the nature of the liquid conveyed being of unstable Langlier Index.
- Solenoid valves will be electrically operated Gate / Ball / Globe valves
- R.O. reject control valve will be Gate / Needle valve
- Foot Valve for pumps will be NRV type with strainer
- Effluent and Solids handling pump will have Y Strainer in the suction side.
- Note: *During detailed engineering, PP ball valves may also be provided in the place of PVC depending on duty condition and valve stability.*
- **Velocity of various process flow conditions:**
- In general, velocity of gravity and pump suction side lines have been considered as 1.0 m/sec, for pump discharge at 2.0 m/sec and for other intermediate process flow lines, 1.2 and 1.5 m/sec based on the process conditions.

Above specifications apply to the CETP and a general specification guidelines are given below. These specifications above will be taken as the final in case of any discrepancy between this and the general specifications provided below.

PIPING DESIGN & EQUIPMENT LAYOUT PHILOSOPHY
FOR
COMMON EFFLUENT TREATMENT FACILITY
AT SIDCO PHARAMCEUTICAL COMPLEX,

ALATHUR, TAMILNADU

CONTENTS

1.0 Scope

2.0 **Design Philosophy**

2.1 General

3.0 Codes, Standards and Supplementary Specifications

3.1 General

4.0 General Design

4.1 Design

5.0 Plant Layout & Design Guidelines

5.1 General

5.2 Pumps

5.3 Exchangers

5.4 Vessels and Columns

5.5 Fired Equipment

5.6 Reciprocating Compressors

5.7 Centrifugal Compressors

5.8 Turbine

5.9 Steam Tracing

5.10 Steam Jacketing

5.11 Steam Traps

5.12 Buried Pipes

5.13 In-line Instruments

5.14 Temperature and Pressure Instruments

5.15 Storage Tank Piping

5.16 Valve Operation

5.17 Sample Connections

5.18 Vents and Drains

5.19 Line Strainers

5.20 Pipe Supports and Restraints

5.21 Personnel Protection

5.22 Mechanical Handling

5.23 Mechanical Clearances

5.24 Accessibility

5.25 Spectacle Blinds

5.26 Utility Stations

5.27 Steam and Condensate Systems

5.28 Air Systems

5.29 Offsite Piping

5.30 General Criteria

6.0 Materials

6.1 Piping Materials

7.0 Painting

8.0 Fabrication and Erection

9.0 Inspection and Testing

10.0 Insulation

11.0 Applicable standards & codes

1.0 SCOPE

This Criteria covers the requirements for the design, supply, fabrication, installation, inspection and testing of process and utility piping systems for EFFLUENT TREATMENT FACILITY at SIDCO Pharamceutical complex, Alathur Tamilnadu.

2.0 DESIGN PHILOSOPHY

2.1 General

2.1.1 Piping systems shall the following specifications:

ASME B31.1 Power Piping
ASME B31.3 Process Piping
ASME B31.5 Refrigeration Piping

Materials, design, construction, testing and inspection shall be fully in accordance with the selected alternate specification.

2.1.2 The dimensions, manufacturing tolerances and marking of ferrous and non ferrous piping components shall conform to the applicable standards .The design shall comply with all applicable codes, laws and statutory regulations.The Contractor shall optimise this layout with the approval of the owner and include any changes resulting from HAZOP studies and taking into consideration the following :

i) General site layout taking into account the topographical geo-technical aspect of the site and to allow for further expansion in future.

ii) Access for maintenance and fire appliances.

iii) The interdependency of units and buildings with each other within the complex.

iv) Safety escape routes for personnel based on emergency or disaster management plans in the event of environmental upset or fire.

v) Suitable drainage system of Project site.

2.1.3 Material of construction shall be suitable for specified process duty (both normal and abnormal operations) and have a projected life and corrosion/ erosion allowance in excess of minimum life of the project. Piping materials specified in Piping materials specification shall be used for selection of material of construction of major services.

2.1.4 All materials under steam service shall be supplied with proper certificates in prescribed forms.

3.0 CODES, STANDARDS AND SUPPLEMENTARY SPECIFICATIONS

3.1 General

3.1.1 The latest edition of codes listed in clause 11.0 shall be applicable for piping system design, materials, fabrication, manufacture, erection, construction and inspection etc. For any item not covered in the list of codes and standards International Standards/proven design may be finalised based on discussion with client.

3.1.2 Where conflict occurs, the order of precedence shall be:

a) Statutory Regulations
b) National, International and Industry Standards and Codes of Practice.
c) PDIL Technical Specifications

3.1.3 Standards, Codes and Supplementary Specifications for piping design shall be applied as follows:

i) Process and utility piping to ASME B31.3 Process Piping
ii) Sour service piping to NACE (National Association of Corrosion Engineers) specification MR0175.
iii) Plant layout and fire protection piping to “Storage and Handling of Flammable and Combustible Liquids”, supplemented where required by NFPA (National Fire Protection Association) Code 30.
iv) Deleted
v) Deleted.
vi) Piping fabrication tolerances to ASME B31.3 and PFI (Pipe Fabrication Institute) practise ES-3.
vii) Colour coding for identification of piping material to PFI Practise ES-22.
viii) Pipe wall thicknesses shall be in accordance with ANSI B36.10 or B36.19.
ix) Deleted

x) PDIL Technical Specification ES-6004 “Fabrication Assembly and Erection of piping”

4.0 GENERAL DESIGN

4.1 DESIGN

4.1.1 Design pressure shall be as indicated in line list.

4.1.2 Design temperature shall be as indicated in line list

4.1.3 Flanges for process and utility piping shall be in accordance with ANSI B16.5 and ANSI B16.47.

4.1.4 Wherever possible all purchased equipment shall be supplied with flanges that comply with ANSI B16.5.

4.1.5 The minimum size of piping to be used in pipe-racks shall be 2" NB.

4.1.6 With the exception of equipment connections the minimum size of piping shall be ½" NPS.

4.1.7 Pipe sizes 1 ¼", 2 ½", 3 ½" and 5" NPS shall not be used except as connections to purchased equipment.

4.1.8 The minimum wall thickness of pipe in the size range ½" to 1 ½" NPS shall be Schedule XS. For stainless steels and exotic materials this may be reduced to Schedule 40S. Threaded pipe nipples between headers and vent, drain and instrument isolation valves shall be Schedule 160 for CS and Schedule 80S for SS in the size range ½" to 2" NPS.

4.1.9 Piping 3" NPS and above shall be butt-welded, with the exception of galvanised pipe used for Instrument Air and similar service, which may be screwed up to 4" NPS

4.1.10 In Class 600 and higher pressure rating double block and bleed valves shall be used for systems open to atmosphere, such as vents and drains. Piping in hazardous service shall have vents, drains and bleeds routed to a safe location. Category 'M' substances shall be vented to the flare system.

4.1.11 When a line of one material specification is connected to a line of higher material specification, the connecting line shall be constructed of the higher material specification or pressure rating up to & including the first block valve.

4.1.12 As a minimum, piping systems shall have isolation facilities as follows:

ASME B31.3 Category 'M' service and Normal service (Class 600 and above) shall have double block isolation valves with a downstream drop-out spool.

ASME B31.3 Normal service (Class 150 and 300) shall have a valve and downstream spectacle blind.

ASME B31.3 Category 'D' service shall have a valve and downstream spectacle blind.

Generally, equipment shall have provision for isolation of piping to each equipment connection by means of valving and/or blinds as determined by service conditions.

4.1.13 Piping flexibility shall be achieved by the use of piping offsets and expansion loops whenever possible. Expansion joints shall not be used without the express written permission of the Owner.

4.1.14 Gear operators shall be specified for gate, globe, angle, ball, butterfly and plug valves as follows:

4.1.15

Gate Valves:	
CL150	14”NPS and larger
CL300	10”NPS and larger
CL600 to 2500	8”NPS and larger
Globe and Angle Valves:	
CL150	12”NPS and larger
CL300	8”NPS and larger
CL600	6” NPS and larger
CL900	4” NPS and larger
CL1500 & 2500	3” NPS and larger
Ball Valves:	
CL150 to 300	8” NPS and larger
CL600	8”NPS and larger
CL900 to 1500	3” NPS and larger
Butterfly Valves:	
CL150 to 600	8”NPS and larger
Plug Valves:	
CL150 to 600	6” NPS and larger

4.1.16 Spectacle blinds and paddle blinds/spacers shall be provided per the pressure class and size range divisions shown below:

4.1.17

Spectacle Blind	Paddle Blind/Spacer
CL150 14”NPS and below	CL150 16”NPS and above
CL300 10” NPS and below	CL300 12”NPS and above
CL600 8” NPS and below	CL600 10”NPS and above

In higher pressure ratings due consideration shall be given to component weights and methods of handling such components.

4.1.18 Formal computer analysis shall be performed on the following piping systems as a minimum:

- Statutory Authority criteria.
- Process lines to and from steam generators.
- Process lines to and from compressors and pumps.
- Carbon steel and low-alloy lines with operating temperatures over 200°C and greater than 4” NPS.
- All stainless steel and high-alloy lines with operating temperature over 200°C and greater than 3” NPS.
- All lines 16” NPS and larger.
- All lines subject to an mechanical or fluid induce impact, vibration, or dynamic loads.
- All air cooler and fired heater piping, excluding instrument air, fuel gas, or auxiliary piping.
- All lines connected to vessels, tanks or equipment nozzles.
- Lines for stress analysis shall be determined by the piping engineer and marked on the line list

4.1.19 External loadings from piping applied to pressure vessel nozzles 3” and above shall be limited to:

Forces: P, VC, VL = NPS multiplied by 40 Newtons

Moments: MT, Mc, ML = NPS multiplied by 60 Newton-Metres

Where NPS = Nominal size of nozzle in mm.

4.1.20 The directions of forces and moments shall be in accordance with Welding Research Council Bulletin 107 (WRC 107), with the exception that the radial force (P) shall be away from the vessel. All forces and moments shall be assumed to act simultaneously and apply at the nozzle/vessel interface.

4.1.21 Air coolers to API 661 shall be specified with Fx forces and Mz moments increased to 1.2 times the value shown in Figure 8 of API 661 for nozzle sizes 6"NPS and larger to simplify piping flexibility analysis and facilitate piping layout.

4.1.22 Piping stress analysis and equipment nozzle loading analysis shall be in accordance with ASME B31.3 paragraphs 3.1.15 and 3.1.16 and the relevant API, ANSI/ISO and NEMA Codes.

4.1.23 **API 610 Pumps**:
The allowable nozzle loads on horizontal centrifugal pumps with steel or alloy cases and discharge nozzles 4" NPS or less, shall meet the load criteria of API 610. Heavy duty baseplate shall be specified where the pump design temperature is in excess of 150°C.

4.1.24 **ASME or Manufacturer's Standard Pumps:**
The allowable nozzle loads on horizontal centrifugal pumps design to ASME B73.1 shall be specified by the manufacturer. For preliminary layout and analysis NEMA SM 23 criteria shall be used for individual nozzles.

4.1.25 **Other Horizontal Centrifugal Pumps:**
The allowable nozzle loads shall meet the load criteria specified by the manufacturer.

4.1.26 **Vertical Turbine, Can-Type Pumps:**
The combined bending and torsional thermal stress in the piping attached to the nozzle shall be limited to 25 percent of the allowable stress range shown in ASME B31.3. The combined stress due to dead load and other sustained loads shall be limited to 25 percent of the allowable hot stress.

4.1.27 **Fired Heater:**
The allowable heater terminal connection load criteria for each fired heater shall be given in the appropriate purchase specification. In the absence of any allowable nozzle load criteria, the preliminary piping layout may be based on limiting the combined dead load and thermal bending and torsional stress in the piping attached to the heater terminal connections to 25 percent of the allowable stress range shown in ASME B31.1/B31.3. The combined stress due to dead load and other sustained loads shall be limited to 25 percent of the hot stress. A ½" lateral clearance at the nozzle penetration opening (s) shall be assumed for layout and design purposes. Final lateral clearance shall be confirmed by the supplier.

4.1.28 For piping design purposes, differential settlement between items of major equipment on separate foundations shall be taken as 10mm.

4.1.29 Cold springing in piping shall not be permitted without written permission from the Owner. Cold springing of piping directly connected to rotating equipment is not permitted under any circumstances.

4.1.30 Deleted.

5.0 Plant Layout & Design guidelines

5.1 General

5.1.1 The plant layout shall be based on ensuring adequate access, to allow construction, inspection, maintenance and operation to be performed in a safe and efficient manner. The alignment of equipment and pipe shall offer an organised appearance. The layout shall be in accordance with, but not limited to the design practices described in this criteria.

5.1.2 Where dynamic loading, limited pressure drop or other severe service condition apply, particular care shall be taken in routing pipe lines.

5.1.3 Flushing connections shall be provided on all lines containing flammable or toxic material, slurries, and materials which solidify when the line is dead. Sufficient Nitrogen purging points shall also be provided . Supply piping of fuel gas shall be arranged for equal flow distribution.

5.1.4 Trolley beams, pipe davits, shall be provided with appropriate removable hoists mechanism for charging and discharging catalysts, chemicals, packing rings etc.

5.1.5 Piping and all other services shall be arranged so as to permit ready access of Cranes for removal of Equipment for inspection and servicing.

5.1.6 All utility and process piping shall be located above ground, and major lines shall be located in overhead pipeways. 20% spare space shall be provided at each piperack level.

5.1.7 The following lines may be buried providing they are adequately protected.

i) Cooling Water Lines 18" dia and larger.

ii) Potable Water Lines.

iii) Firewater mains.

iv) Drain and sewer (oily and chemical) lines from catch basin to mains and manholes.

Lines that must be run below grade, and must be periodically inspected or replaced, shall be identified on the P&ID's; these lines must be placed in covered concrete trenches.

Sleeper-ways shall not be used in process areas where they may block access for personnel and equipment.

5.1.8 **Fire protection system shall be provided as a closed loop with hydrants spaced as per Isolation valves with position indicators shall be provided to shut off sections without shutting off the entire system.**

5.1.9 **Drip legs and dead ends shall be avoided, especially for piping where solids or fluids may congeal from corrosive condensate.**

5.1.10 **The location and spacing of storage tanks and dike requirements shall be in accordance with standard where applicable. Spacing may be increased for constructability requirements.**

5.1.11 **Where sleeperways are used the elevations shall be staggered to permit ease of crossing or change of direction at intersections. Flat turns may be used when entire sleeperways change direction. Flat turns must not be used within piperacks.**

5.1.12 **Cooling towers should be located away from process unit area, preferably downstream direction of wind. Orient the short side of the tower into the prevailing summer wind for maximum efficiency. Locate cooling towers a minimum of 30m from process units, utility units, fired equipment, and process equipment.**

5.1.13 **Locate flare stacks upwind of process units, with a minimum distance of 60m from process equipment, tanks and cooling towers.**

5.1.14 **Spacing and routing of piping shall be such that expanding/contracting lines (including insulation) will not clash with adjacent lines, structures, instruments and electrical equipment during warm up and cool down.**

5.1.15 **Piping to be sloped shall be indicated on the P&ID's.**

5.2 Pumps

5.2.1 Locate pumps close to the equipment from which they take suction. Pumps will normally be located adjacent to the piperacks

5.2.2 Piping for end suction pumps shall be designed to allow removal of suction cover and pump impeller while the suction and discharge valves are in place.

5.2.3 Suction lines to minimize offsets. The suction lines shall be short and as direct as possible, and shall step down from the equipment to the pump.

5.2.4 Valve handwheels or handles shall be oriented so that they will not interfere with pump maintenance or motor removal. Valve handwheels shall be readily operable from grade.

5.2. 5 The followings are to be considered while designing piping of pumps:

i) Suction and discharge piping shall be in accordance with ES:6024

ii) Based on General Arrangement drawing received from pump vendor, the layout of pumps is decided. The G.A drawing of pump is checked and piping for cooling water (for bearing/gland cooling), flushing/ quenching of mechanical seals, steam (for steam jacketing of casing), vent and drain connections as required by pump vendor are provided. In case the above requirements are not shown in P & I diagram , comments are sent to process Engineering Department for in corporation.

iii) For pumps where stress analysis is necessary, the same is checked by computer programme . The actual forces and moments on pump nozzle is kept within the allowable forces & moments as specified by pump vendor.''

5.3 Exchangers

5.3.1 Sufficient space shall be provided around fixed tube sheet heat exchangers and heaters to permit all tubes to be rodded and/or rattled during cleaning.

5.3.2 Exchanger shall be grouped together where possible.

5.3.3 Stacked shell and tube exchangers shall be limited to four shells high in similar service, however the top exchanger shall not exceed a centreline elevation of 5m above grade unless mounted on a structure.

5.3.4 Reboilers shall be located as close as possible to the equipment they serve.

5.3.5 Air-coolers shall normally be located above piperacks.

5.3.6 The following points (minimum) shall be considered for design of heat exchanger

piping. C.W. piping to tubular exchanger units shall be arranged to ensure flooded tubes

i) Nozzles for CW piping should preferably be located over CW header.

ii) Piping shall not run in the way of built in or mobile handling facilities.

iii) Wrench clearance shall be provided at exchanger flanges.

iv) Levels of pipes to critical Heat Exchanger and equipment's shall be such as to keep the equipment flooded.

v) Sufficient space shall be provided around fixed tube sheet heat exchangers and heaters to permit all tubes to be rodded and/or rattled during cleaning.

vi) One valve in C.W. line normal case (Discharge end side)

vii) Two valves (one each in inlet and out let lines) where Heat Exchanger may be taken out of system for maintenance while the unit is in operation.

viii) Provide relief valve to prevent possible pressure build up (when block valves installed permit trapping the cold side of an exchanger)

ix) Relief valves discharging in to flare system shall be elevated to provide self draining.

5.4 Vessels and Columns

5.4.1 Piping at columns shall be located radially about the columns on the piperack side. Manways and platforms shall be located on the access side. Manways should be located on or about a common centreline to make use of a common lifting device or davit.

5.4.2 Platforms shall be provided at manways above 4.5m cenetrline elevation from grade. The maximum distance for ladder runs and space between offset platforms shall be 6m.

5.4.3 Platforms shall be positioned such that the manhole centreline is no less than 600mm above the platform, with 750 mm preferred. The bottom of the manhole entry shall not be more than 1070mm above the platform.

5.4.4 Combined platforms shall be provided, where practical and economical, at multiple tower arrangements with common manway elevations.

5.4.5 Wherever possible level instruments shall be oriented on the side toward the piperack.

5.4.6 While routing the pipe care shall be taken to put orientations of all nozzle towards pipe racks if line from and to towers are to/from pipe racks.

i) Riser/Down comer pipes Should be close to tower surface after clearing insulation if any.Lines shall be anchored from the tower at neutral axis with bracket supports. Efforts shall be made to route the lines in such a way that near by structure can be used for supporting.

ii) Platform & ladder shall be provided at different level for each manhole/handholes, valve stations, level gauges etc. Minimum width of platform shall not be less than 900 mm and maximum 1400 mm. However in certain case to meet process requirement we may go for platform width of 2000 mm.Ladder orientation from one platform to higher platform shall be staggered , keeping in view the accessibility of T.I,P.I, level gauges, thermo couples, riser pipe, down comer pipe etc.

iii) Pipe davit requirements (height, overhang, capacity, orientation) shall be decided clearing all platforms from grade level.

iv) Platform cleats/ladder cleats shall be shown in nozzle orientation drawings.

v) Orientation of name plate shall be kept in such a way so as to have clear visibility from grade.

vi) Sample connection points should be shown and shall have access from the operating platform.For removal of top cover break flange should be provided. While preparing the piping, angle of Nozzles, manholes, hand holes, support pads, cleats, at the same level shall be reviewed for fouling with each other and shall be co-ordinated with vendor for weld seam fouling.All vent header shall be routed upto safe height.

While deciding the tangent line elevation, NPSH available of the system shall be checked with respect to pump data sheet.

5.5 **Fired Equipment**

5.5.1 Burner Piping shall be kept clear of all access & observation openings.

5.5.2 Where practical, fired equipment shall be located so that flammable gases from hydrocarbon and other processing areas cannot be blown into the open flames by prevailing winds.

5.5.3 Snuffing steam manifolds and fuel gas shutoff valves shall be located behind a fire wall, a minimum of 15m horizontally from the heaters they protect.

5.5.4 **Burner valving**:

Floor Fired Furnaces**: Gas fired burner valves shall be near the burner and shall be operable from grade.**

Side Fired Furnaces**: Local firing valve shall be operable while the flame is viewed from the observation door.Heater stacks shall be terminated a minimum of 4.5m above any platform within a radius of 12m.**

5.5.5 Access and platform requirements shall be in accordance with the suppliers recommendations.

5.5.6 Pressure relief doors and tube access doors shall be free from obstructions. Relief doors shall be oriented so as not to blow into adjacent equipment.

5.5.7 The elevation of the bottom of the heater above grade shall be specified in the fired equipment specification document.

5.6 Reciprocating Compressors

5.6.1 Suction and discharge lines that are subject to vibration (mechanical and acoustical) shall be routed at grade and held down at points established by analysis of the system.

5.6.2 Suction lines shall be cleaned in accordance with process requirements and the compressor vendor's specifications. The extent of the cleaning shall be indicated on the P&ID's.

5.6.3 Cylinder valves on horizontal, straight-line, reciprocating compressors shall be accessible from grade ort a platform.

5.6.4 Depending on unit size and installation height, horizontal-opposed and gas-engine driven reciprocating compressors may require full platforming at the operating level.

5.6.5 The sizing, routing, supporting and restraining of the suction and discharge piping may be subject to review by means of an analog compressor study.

5.7 Centrifugal Compressors

5.7.1 Top suction and discharge lines shall be routed to provide clearance for overhead maintenance requirements or shall be made up with removable spool pieces.

5.7.2 Lube and seal oil consoles shall be located as close as possible to the compressor. Oil return lines from the compressor and driver shall have a minimum slope of 50mm per metre to the inlet connection of seal traps, degassing tanks, and oil reservoir.

5.7.3 Reservoir, compressor bearing, and seal oil vent piping shall be piped to a location at least 2m above operator head level.

5.7.4 Heavy components shall be accessible to mobile lifting equipment.

5.7.5 Piping shall be supported so as to minimize the dead load on the compressor nozzles. The load shall be within the recommended allowances of API 671.

5.7.6 Suction lines shall be cleaned in accordance with process requirements and the compressor vendor's specifications. The extent of the cleaning shall be indicated on the P&ID's.

5.7.7 Centrifugal compressors shall have full platforming at operating level.

5.7.8 The following points shall be considered for design of compressor piping.

i) Strainers in suction lines should be provided.

ii) Short spool piece in suction and discharge line shall be kept for easy removal during maintenance of top half casing.

iii) Care should be taken to avoid Loops and pockets in suction piping.

iv) For hot lines in order to have full advantage of flexibility support on bend in discharge line should be avoided.

v) All process pipe connections are analysed for flexibility to ensure that compressor nozzle forces and moments are within the allowable limits indicated by vendor.

vi) Use of bellows in process pipe connections are avoided as far as possible. Bellows may be used in piping, handling non hazardous and non-toxic fluids for low pressure and large size pipes. In case expansion bellows are selected for achieving flexibility , care is taken to select expansion bellow with tie rod to eliminate transfer of forces due to pipe line pressure during operation on the compressor nozzle. The bellows are located for absorbing lateral movements.

vii) For coolers placed on springs, process pipe stress analysis shall account for the movement of the cooler during operation and resultant reaction from the springs under piping is provided with expansion bellows with tie rods for absorbing lateral movement.

viii) Piping are provided with vents and drains at appropriate locations for hydro-testing and condensate removal during start-up.

ix) Break flanges and spool pieces are provided for maintenance whenever required.

x) All valves are preferably located on compressor operating floor. In case the valve is located elsewhere, approachability for ease of operation and maintenance is ensured. If required, platform with cat ladder is provided.

xi) Supports for main process pipes are preferably taken from floor supporting columns and main beams.

xii) All piping are terminated with anchors or axial stops at battery limit to avoid effect of pipe movements from outside the compressor area.

xii) All piping in the area is checked for any fouling with other equipment's, structures, piping etc.

xiv) A space of about 1000 to 1200 mm is left between the top of highest elevated pipe and operating platform to enable laying of instrument and electrical cable trays inside the compressor house.

5.8 TURBINES

5.8.1 The following points are considered for design of steam Turbine piping

5.8.2 Live steam inlet and extraction lines are analysed for flexibility as per NEMA - SM23 to ensure that turbine nozzle forces and moments are within the allowable limits indicated by vendor. For back pressure, the exhaust lines are also analysed.

5.8.3 Use of bellows are avoided in steam pipe connections as far as possible.

5.8.4 In case expansion bellow is selected, care is taken to select expansion bellow with tie rod to eliminate transfer of forces due to pipeline pressure during operation on the turbine nozzle. The bellow are located for absorbing lateral movements.

5.8.5 Calculated nozzle forces and moments after flexibility analysis is forwarded to the turbine vendor for acceptance and turbine stability calculation.

5.8.6 Steam branches to turbine is taken from the top of the header.

5.8.7 Steam traps arrangement upstream of main isolation valve is provided to drain all the condensate collected during starting.

5.8.8 Break flanges and spool pieces are provided for maintenance wherever required.

5.8.9 For initial cleaning of pipeline, valve with bleed connection is provided.

5.8.10 Piping are provided with vents and drain at appropriate locations for hydro testing and condensate removal during start-up.

5.8.11 All the valves are preferably located on compressor operating floor. In case the valve is located elsewhere, approachability for ease of operation and maintenance is ensured. If required, platform with cat ladder is provided.

5.8.12 Supports for main steam pipes are preferably taken from floor columns and main beams.

5.8.13 All piping are terminated with anchors or axial-stops at battery limit to avoid effects of pipe movements from outside the turbine area..

5.8.14 All the piping in the area are checked for any fouling with other equipment, structures, pipings etc. space of about 1000 to 1200 mm is left between the top of highest elevated pipe and operating platform to enable laying of instruments and electrical cable trays inside the turbine house area.

5.9 STEAM TRACING

5.9.1 From P & I diagram, check the size of the main line which require steam tracing and tracer line temp. & pressure.

5.9.2 Refer Steam tracing Engineering Standard No. ES-6016 and decide the size & numbers of tracers required for the said size of main pipe which is to be traced.

5.9.3 All tracer lines to be shown along the main pipe routing on the reproducible of piping layout arrangement drawing.

5.9.4 Each individual tracer shall be fed directly from the feeding stations and shall terminate directly at the condensate recovery stations.

5.9.5 Branching from a tracer line to feed another tracer is not permitted under any circumstances.

5.9.6 Steam for tracing lines shall be taken from the steam header, possibly from a sub-header used only for utilities and heating purpose.

5.9.7 The length of the tracers from feeding point to discharge point shall not exceed as indicated in ES-6016.

5.9.8 Steam tracers shall not hinder the disassembly operations for valve and pump maintenance.

5.9.9 Identification system for steam feeding & incoming condensate station shall be as per steam tracing standard ES-6016.

5.10 STEAM JACKETING

5.10.1 Special care shall be taken in spacing & supporting while routing the lines which are to be Steam Jacketed.

5.10.2 Spacing of jacketed pipe with other pipes shall take care of jacket cover pipe O.D.

5.10.3 Supporting of the jacket pipe shall be considered while supporting the main pipe.

5.10.4 Refer Engineering Standard No. ES- 6030 for steam jacketing.

5.10.5 Welding joints shall not be covered under jacketing which may cause leakage in future.

5.10.6 Steam inlet and outlet shall be shown with line No, size in the Piping G.A. drawing as per P & I diagram.

5.10.7 Details of the jacket pipe shall be shown in the individual pipe line in isometric (Refer Engineering Standard for Jacketed Piping ES-6030.).

5.10.8 Separate B.O.Q. shall be considered for detailed jacketed pipe from Isometric directly.

5.10.9 Main pipe around which jacketing is required as per process and instrument diagram shall be shown as "Dotted" in Isometric drawing.

5.10.10 Feeding of steam to Jacket shall be from top and condensate outlet from bottom most portion of jacket.

5.11 STEAM TRAPS

5.11.1 For "Installation of Steam Traps" refer engineering standard No ES-6029.

5.11.2 Requirement & Location of Steam Traps shall be finalised after finalising the routing of Steam Lines and marked on the piping G.A. Drawings.

5.11.3 Steam Trap shall be provided up stream of each expansion loops.

5.11.4 Routing of Steam Traps line from Drip leg should be along the nearest column to locate steam trap assembly .

If Piping and Instrument Diagram indicates condensate recovery system, same shall be returned to condensate header with a check valves otherwise left to surface drain.

5.12 BURIED PIPES

5.12.1 The following points to be considered in designing of buried pipes

5.12.2 All underground metallic piping shall be coated and wrapped and provided with cathodic protection system. If sacrificial metal is used, permanent testing arrangement shall be provided.

5.12.3 All Cooling water distribution headers 18" and higher shall be laid underground.

5.12.4 All Sewage lines (oily and chemical) from catch basin to mains and manholes shall be laid underground.

5.12.5 Underground pipe crossing roads, access ways, rails shall have casing pipe (R.C.C or C.S).

5.12.6 Valve chamber wherever required shall be made of brick or concrete. Valve chamber should be spacious to attend valves during operation/Maintenance.

5.12.7 All U.G. headers shall clear equipment foundations as far as possible. Under special cases, the C.W. header may be laid over the footing of foundations.

5.12.8 Provide break flange at + 500 MM from floor level connection with cathodic protection to isolate underground pipe from aboveground piping.

5.12.9 Pipes shall be laid below electrical cables if any.

5.12.10 Ref Engineering Standard No: ES-6018 for underground piping.

5.12.11 **Piping in trenches**

The following points to be considered in designing of trench pipes

i) Piping located below grade, requiring inspection, servicing or provided with protective heating.

ii) Fire water lines/Process lines.

iii) Drain lines requiring gravity flow trenches.

iv) Trenches shall be as defined in PDS: P-032.

v) Sump for valves and trenches shall be as defined in PDS:ST-202 & PDS:ST-203.

vi) Suitable draining scheme for trenches shall be provided.

5.13 **In-Line Instruments**

5.13.1 Liquid level controllers and level glasses shall be located so as to be accessible from grade, platform or permanent ladder. The level glass shall be readable from grade wherever possible.

5.13.2 Relief valves shall be accessible. Relief valves with a centreline elevation over 4.5m above grade (expect in piperacks) shall be accessible from a platform or permanent ladder.

5.13.3 Relief valves that discharge to a closed system shall be installed higher than the collection header, with no pockets in the discharge line.

5.13.4 Relief valves that discharge to atmosphere shall have tail-pipes extended to a minimum of 3.0 m above the nearest operating platform that is within a radius of 8m.

5.13.5 Provide steam traps at pocketed low points and at dead ends of steam headers. Provide steam traps on excessively long runs of steam piping to ensure dry quality steam at destination. Steam traps located more than 4.5m above grade, except in piperacks, shall be accessible from a platform.

5.13.6 Control valves shall be accessible from grade or platforms. In general, the instruments or indicators showing the process variables shall be visible from the control valve.

5.13.7 Orifice runs shall be located in the horizontal. Orifice flanges with a centreline elevation over 4.5m above grade, except in piperacks, shall be accessible from a platform or permanent ladder.

5.13.8 Orifice taps shall be located as follows:

i) Air , Gas and steam

Top vertical centreline (preferred)

45 degrees above horizontal centreline (alternate)

ii) Liquid

Horizontal centreline (preferred)

45 degrees below horizontal centreline (alternate)

iii) Tap orientation shall be shown on piping isometrics.

5.14 Temperature and Pressure Instruments

5.14.1 Temperature wells located less than 4.5m above grade shall be accessible from grade or a portable ladder. Those located in a piperack shall be considered accessible by a portable ladder. Those located over 4.5m above grade shall be accessible from a platform or a permanent ladder.

5.14.2 Temperature indicators shall be visible from grade, ladder or platform.

5.14.3 Thermocouple and temperature indicators located less than 4.5m above grade shall be accessible from grade or a portable ladder. Those located in a piperack shall be considered accessible by a portable ladder. Those located over 4.5m above grade shall be accessible from a platform or a permanent ladder.

5.14.4 Local pressure indicators shall be visible from grade, platform or permanent ladder. Those located less than 4.5m above grade shall be accessible from grade or a portable ladder. Those located in a piperack shall be considered accessible by a portable ladder. Those located over 4.5m above grade shall be accessible from a platform or a permanent ladder.

5.15 **Storage Tank Piping**

5.15.1 Tank isolation valves shall be positioned on the tank nozzles.

5.15.2 Adequate flexibility shall be provided in connecting piping such that the tank nozzles and valves will not become overstressed when tank settlement occurs. Pipe runs within the bund shall be as short as possible.

5.15.3 Open overflow lines shall not be installed on tanks containing flammable liquids.

5.15.4 Piping through concrete firewalls shall be installed using pipe sleeves or other controlled penetrations in the bund wall.

5.15.5 Feed lines from the tanks to the pumps shall be arranged such that the lines are not at an elevation higher than the tank nozzles.

5.15.6 Supports that are required close to the tank nozzles shall be provided with springs to accommodate tank settlement.

5.16 **Valve Operation**

5.16.1 Valves shall be located to be accessible from grade, platform, or permanent ladder.

5.16.2 Operating valves may be chain-operated if the bottom of the handwheel is over 2.2m above grade or operating platform.

5.16.3 Shutdown valves with a centreline of handwheel less than 4.5m above grade, and those in piperacks, may be accessible from a portable ladder.

5.16.4 Valve handwheel, handles, levers and stems shall be kept out of operating aisles. Where this is not practical the valve shall be elevated to 2m above grade to the bottom of the handwheel.

5.16.5 Height of valve handwheel from the top of a platform shall be:

i) horizontally mounted valve 1000 to 1350 mm
ii) vertically mounted valves 1100 to 1300 mm

5.16.6 Check valves shall be located in horizontal pipe runs where possible. If it is necessary to locate a check valve in a vertical run, the suitability of the valve type shall be carefully considered and piping above the check valve shall be drained.

5.16.7 Unless noted otherwise, all open-ended valves shall be fitted with a plug, screwed cap or blind-flange as applicable to the type of end connection.

5.16.8 Valves in process lines, which take more than15 minutes to be manually opened or closed, shall be motorised. Valves requiring motor operation shall be indicated an applicable P&I diagram.

5.17 **Sample Connections**

5.17.1 Sample connections shall be accessible from grade or platforms. In general, where liquid samples are taken in a bottle, locate the sample outlet above a drain funnel to permit free running of the liquid before sampling.

5.18 **Vents and Drains**

5.18.1 Valved bleeds shall be provided at control valve stations, level switches, level controllers, and gauge glasses.

5.18.2 Process vents and drains shall be indicated on the P&ID's.

5.18.3 Low-point hydrostatic drains and high-point hydrostatic vents shall be added as required; locations to be determined during the Design review.

5.19 **Line Strainers**

5.19.1 Provide temporary conical type strainers in 2" NB and above butt weld pump suction lines for use during start-up. Arrange piping to facilitate removal.

5.19.2 Provide permanent Y-type strainers on 2" and smaller screwed or socket-weld pump suction piping.

5.19.3 Provide temporary basket type strainers located at the suction pulsation device inlet for start-up of reciprocating compressors. Arrange piping to facilitate removal of the filter.

5.19.4 Provide temporary basket type strainers and locate them as close as possible to the compressor inlet flange for start-up of centrifugal compressors. Arrange piping to facilitate removal of the filter.

5.20 **Pipe Supports and Restraints**

5.20.1 Piping and shoes or cradles shall sit directly on steelwork surfaces.

5.20.2 Generally pipe shoes height for insulated piping shall be 100mm.

5.20.3 The following lines shall be analysed to determine whether pipe shoes or cradles are required at support points:

- **Large diameter piping, 20"NB and above,**
- **Stainless steel and alloy lines where galvanic action or excessive wear may occur at support steel,**
- **Lines with wall thicknesses less than standard weight,**
- **Vacuum lines**

5.20.4 Insulation cradles shall be provided at support points for cold insulated piping.

5.20.5 All sizes of piping in the piperack shall be controlled against thermal expansion and contraction from ambient and process conditions. Piping shall generally be fitted with central line stops or anchors, and guides.

5.20.6 Piping subject to transient flow conditions shall be controlled by anchors, line stops and guides as required.

5.20.7 Galvanised pipe support components shall not be used. Spring supports shall have neoprene coated springs.

5.20.8 A set of prints of piping G.A. drawings. shall be set aside for marking of supports with the help of support standards, available structure drawings and line schedule, which shall be finally incorporated in the original piping G.A. drawing.

5.20.9 Types and details of supporting structures as well as pipe support attachments shall be entered in the support schedule form enclosed.

5.20.10 Support symbols on individual pipe lines shall be marked as per PDS: PS-01

5.20.11 Exact designation as specified in PDS: PS-01 should be mentioned. Variable dimensions which are not mentioned in the PDS: PS should be indicated.

5.20.12 In case the piping support assembly is not covered by the PDS: PS, detailed sketch shall be made on a separate sheet and the sketch numbers referred in the support schedule form enclosed.

5.20.13 Special notes in the pipe support standards mentioned in individual standards must be taken care during selection of pipe support standards (like - maximum allowable loads, vertical loads, maximum moment, trunnion height etc.).

5.20.14 Trunnion pipe material and reinforcement plate material as main pipe should be taken care alongwith piping bill of material.

5.20.15 While selecting brackets for Horizontal pipes vide PDS: PS-01, Maximum load and maximum nominal dia of pipe should be considered as per standard.

5.20. 16 “Thermal Analysis of pipe” report must be considered for final selection and marking of supports.

5.20.17 Spring schedule should be filled in the format enclosed with thermal analysis of pipe report.

5.20.18 Maximum utilisation of existing structures shall be made for supporting the pipes.

5.20.19 For supporting on grade, existing paving shall be utilised. Refer PDS: PS-9.

5.20.20 For supports not covered in PDS: PS-9, additional foundations with loads shall be marked on plot plan to be passed on to civil department for detail design of concrete foundations. Clearance should be as per ES : 6001. However requirements against specific project shall govern.

5.21 Personnel Protection

5.21.1 Eyewash and emergency safety showers shall be provided in areas where operationg personnel are subject to hazardous sprays, emissions or spills.

5.21.2 Personnel protection shall be provided on uninsulated lines and equipment operating above 70°°C when they constitute a hazard to the operators during normal operation of the facility.

5.21.3 Leakage indicating tape and spray impingement shrouds shall be provided at flanged joints in hazardous service.

5.22 Mechanical Handling

5.22.1 Handling facilities such as davits and monorails shall be provided on vessels over 10m in height where the weight of removable internal and/or external equipment is greater than 35 Kg.

5.23 Mechanical Clearances

5.23.1 Minimum clearances for piping, equipment, structures, platforms, and supports shall be in accordance with the following table:

Item	Description	
Roads	**Headroom for primary access roads (from the crown)**	**6.5m**
	Width of primary access roads excluding shoulders.	**6m**
	Headroom for secondary roads (from the crown)	**4.2m**
	Width of secondary roads excluding shoulders.	**3m**
	Clearance from edge of road shoulders to platforms, equipment, pipe associated with equipment, or similar	**1.5m****

Item	Description	
	features.	
Maintenance Aisles at Grade	**Horizontal clearances for equipment maintenance by hydraulic crane (12t capacity)**	**3m**
	Vertical clearance for equipment maintenance by hydraulic crane (12t capacity)	**3.6m**
	Horizontal clearance for fork lift and similar equipment (2500 kgs capacity)	**2.4m**
	Vertical clearance for fork lift and similar equipment (2500 kgs capacity)	**2.4m**
	Horizontal clearances for equipment maintenance by portable manual equipment (A-frames, hand trucks, dollies or similar equipment)	**1m**
	Vertical clearances for equipment maintenance by portable manual equipment (A-frames, hand trucks, dollies or similar equipment)	**2.4m**
Walkways	**Horizontal clearance (not necessarily in a straight line)**	**750mm**
	Headroom (except for handwheels)	**2.2m**
Platforms	**Minimum width**	**750mm**
	Headroom from stairwell treads.	**2.2m**
	Minimum clearance around any obstruction on the platform.	**500mm**
	Headroom	**2.2m**
	Maximum vertical distance between platforms	**6m**
	Minimum toe clearance behind a ladder.	**210mm**
	Minimum handrail clearance.	**100mm**

Item	Description	
Equipment	**Minimum maintenance space required between flanges of exchangers or other equipment arranged in pairs.**	**500mm**
	Minimum maintenance space required for structural members or pipe.	**300mm**
	Clearance from edge of road shoulder (the extreme projection)	**1.5m**
Fired Equipment	**Horizontal clearance from hydrocarbon equipment (shell to shell)**	**15m**
	Exception: Reactors or equipment in alloy systems shall be located for the most economical piping arrangement.	
	Clearance from edge of road to heater shell.	**3m**
Valve Handwheels	**Clearance between the outside of the handwheel and any obstruction.**	**25mm***
Pipe (aboveground)	**Clearance between the outside diameter of the flange and the outside diameter of pipe insulation.**	**25mm***
	Clearance between the outside diameter of the pipe, flange or insulation and a structural member.	**50mm***
	Clearance between the outside diameter of the flange and the outside diameter of bare pipe.	**25mm***
	Minimum distance from underside of pipe to grade or platform.	**300mm**
Control Valve Arrangement	**Centreline of control valve above grade or platform.**	**450mm**
	Minimum centreline of control valve from face of column or wall.	**600mm**
	Where process conditions require steam or hydrocarbon vapours to be discharged to atmosphere at	

Item	Description	
	a safe location, the tail pipe shall terminate as below:	
	Distance above nearest operating platform.	**3m**
	Within radius of nearest operating platform.	**7.5m**
	**** Verify conformance with local regulations.** *** With full consideration of thermal movements**	

5.24 **Accessibility**

5.24.1 Continuous and unobstructed way of exit shall be provided from any point in a building, elevated equipment or structure.

5.24.2 A secondary means of escape shall be provided where the travel distance from the furthest point on a platform to an exit exceeds 23m.

5.24.3 Access to elevated platforms shall be by permanent ladder. Where the platform is 3000mm above grade another platform or safety cage shall be provided. The cage shall start at 2300mm above grade or platform. The need for a stairway shall be determined by platform elevation, number of items requiring attention, observation and adjustment, and the frequency of the activity.

5.24.4 Equipment, structures and piping shall be arranged to permit maintenance by mobile equipment.

5.24.5 Clear access are shall be provided at grade for vessels with removable internals or for vessels requiring catalyst loading or unloading.

5.24.6 Exchangers with removable tube bundles shall have maintenance clearance equal to the bundle length plus 1.5m measured from the tube sheet.

5.24.7 Sufficient access and clearance shall be provided at fired equipment for removal of tubes, soot blowers , air pre-heater baskets, burners, fans, and other related serviceable equipment.

5.24.8 Plant roads may be used as tube pull areas.

5.25 Spectacle Blinds

5.25.1 Spectacle blinds shall be provided to isolate equipment. In hazardous service flanged drop-out spools shall be provided for safety purposes. Both shall be shown on the P&ID's.

5.25.2 Spectacle blinds shall be accessible from grade or platforms. Blinds located in a piperack are considered to be accessible. Blinds that weigh over 40kg shall be accessible by mobile equipment. Where this is not possible davits or hitching points shall be provided.

5.26 Utility Stations

5.26.1 Utility stations shall be provided with water, steam, air and nitrogen as required and as indicate don the P&ID's. Couplings and hoses shall not be interchangeable between services. Single 15m length of hose shall be used to reach the entire work are from the station.

5.26.2 Water outlets and steam outlets shall be provided at grade level only.

5.26.3 Header block valves used in utility lines shall be installed in horizontal runs at high points in the line so that the line will drain in both directions from the valve.

5.27 Steam and Condensate Systems

5.27.1 Steam piping shall be designed to have complete condensate removal. Drip legs shall be provided with steam traps at low points in the system.

5.27.2 All steam and condensate branch connections shall be taken from the top of the header.

5.27.3 Return exhaust steam/ condensate lines shall connect to the top of the exhaust steam. Condensate header.

5.27.4 Where block valves have been installed in the main steam header such that condensate can collect either side of the valve when closed, a safe means of draining the condensate prior to opening the valve shall be provided.

5.28 Air Systems

5.28.1 Branch connections shall be taken from the top of the header.

5.28.2 Low points shall be fitted with drains.

5.29 Offsite Piping

5.29.1 Flare headers to blowdown drum piping shall be run without pockets with a constant fall to the KO Drum.

5.29.2 Expansion loops shall be grouped into loop nests where practical.

5.30 General Criteria

Minimum diameter pipe for flanged thermowell connection	4”
Pump suction piping reducer to be installed top flat	
Minimum slope of piping requiring positive draining	**1:250**
Spacing of instrument air take-offs along piperack headers	**6m**
Unless in vertical legs all reducers to be eccentric.	
Minimum clear width between adjacent vessels (insulation thickness to be added)	**1.2m**
Minimum clear width of operating and servicing area around compressors.	**1.5m**
Minimum truck access width.	**3.5m**
Minimum clearance width between pumps and small vessels and piping manifolds.	**1m**
Minimum clearance in front of inspection, clean out and manway opening.	**900mm**
Minimum clear headroom under main piperacks.	**3.6m**
Minimum clear access width under main piperacks.	**3m**
Minimum clear headroom under secondary piperacks.	**2.6m**

6.1.16 Nelson Curves in accordance with API 914 shall be applicable to piping system materials in hydrogen service.

6.1.17 Material for Naphtha service shall be in accordance with NACE – MR-0175-94 (Sulphide Stress Cracking Resistant Material)

6.1.18 The minimum corrosion allowance for any material, other than stainless steel, shall be not less than 1.0mm. For stainless steel it is zero.

7.0 Painting

7.1 Painting and Coating shall be carried out in accordance with the Standards, Codes and Supplementary Specifications listed in Section 3.0 of this criteria.

8.0 Fabrication and erection

8.1 Fabrication and erection shall be carried out in accordance with the Standards, Codes and Supplementary Specifications listed in Section 3.0 of this criteria.

9.0 inspection and testing

9.1 Inspection and testing shall be carried out in accordance with the Standards, Codes and Supplementary Specifications listed in Section 3.0 of this criteria.

10.0 Insulation

10.1 Insulation shall be carried out in accordance with the Standards, Codes and Supplementary Specifications listed in Section 3.0 of this criteria.

11.0 Applicable Standards and Codes

Standard No.	Title
ASME/ANSI B1.1	Unified Inch Screw Threads (UN & UNR Thread Form)
ASME/ANSI B1.20.1	Pipe Threads, General Purpose (Inch)
ASME/ANSI B16.1	Cast Iron Pipe Flanges and Flanged Fittings
ASME/ANSI B16.5	Steel Pipe Flanges and Flanged Fittings
ASME/ANSI B16.9	Steel Butt-Welding Fittings
ASME/ANSI B16.10	Face to Face and End to End Dimensions of Valves
ASME/ANSI B16.11	Forged Fittings Socket Welded and Threaded -
ASME/ANSI B16.20 Wound,	Metallic Gaskets for Pipe Flanges – Ring Joint, Spiral and Jacketed.
ASME/ANSI B16.21	Non-Metallic Flat Gaskets for Pipe Flanges
ASME/ANSI B16.25	Butt-Welding Ends
ASME/ANSI B16.34	Valves – Flanged, Threaded Welding End.
ASME/ANSI B16.47	Large Diameter Steel Flanges
ASME/ANSI B31.1	Power Piping
ASME/ANSI B31.3	Process Piping.
ASME/ANSI B31.5	Refrigeration Piping
ASME/ANSI B36.10M	Welded and Seamless Wrought Steel Pipe.
ASME/ANSI B36.19M	Stainless Steel Pipe
API 6D	Specification for Pipe Line Valves (Gate, Plug, Ball and Check Valves).

API 6FA	**Fire Test for Valves.**
API 501	**Specification for Metallic Gaskets for Refinery Piping.**
API 598	**Valve Inspection and Testing.**
API 599	**Steel Plug Valves Flanged and Butt-weld ends**
API 600	**Steel Gate Valves Flanged and Butt-weld ends**
API 602	**Compact Carbon Steel Gate Valves**
API 603	**Class 150 – Corrosion Resistant Flanged End gate valves.**
API 604	**Ductile Iron gate valves – flanged ends.**
API 606	**Compact C.S. Gate Valve extended body.**
API 607	**Fire Test for soft seated Ball Valve.**
API-608	**Metal Ball Valves, Flanged, Threaded & BW Ends.**
API 609	**Butterfly Valves, Lug type & Wafer type.**
AWWA C207-D	**Large Dia. Steel Flanges (Ring Type).**
EJMA	**Expansion Joints Manufacture Association.**
MSS SP 6	**Standard Finishes for Contact Faces of Pipe Flanges and Connecting End Flanges of Valves and Fittings.**
MSS SP 25	**Standard Marking System for Valves, Fittings, Flanges & Unions**
MSS SP 43	**Wrought Stainless Steel Butt-weld Fitting**
MSS SP 45	**By-pass and Drain Connection.**

NACE MR0175-94	**Sulphide Stress Cracking resistant Metallic Material**
NFPA	**National Fire Protection Association.**

Fire Protection

NFPA 11A	**Medium and High-Expansion Foam Systems**
NFPA 12	**Carbon Dioxide Extinguishing Systems**
NFPA 16,16A	**Deluge Foam-Water Systems and Foam-Water Sprinkler System**

Painting

ASTM A123	**Specification for zinc (hot galvanised) coatings on products fabricated from rolled, pressed and forged steel shapes, plates, bars and strips**
ISO 8501-I	**Preparation of Steel Surfaces before application of Paints and Related Products.**

6.0 Materials

6.1 Piping Materials

6.1.1 All materials for piping components shall conform to the relevant code and/or specification.

6.1.2 All materials shall be new.

6.1.3 All plate, sections, pipe, fittings, flanges, valves and special items shall have Material Test Certificates.

6.1.4 All alloy materials shall have Material Certificates verifying the alloy content.

6.1.5 All bolting and gasket material shall have Letters of Compliance as a minimum.

6.1.6 All alloy bolting and gasketing shall have material Letters of Conformance verifying the alloy content.

6.1.7 Deleted

6.1.8 ERW pipe and fittings shall only be used for category ‘D’ service as defined by ASME B31.3.

6.1.9 Category ‘M’ and Normal Service piping as defined by ASME B31.3 shall use seamless or 100% radiographed EFW pipe and fittings.

6.1.10 Deleted

6.1.11 For services defined within ASME B31.3 as Category ‘M’, no socket welded or threaded construction or connections shall be used for process equipment or piping systems. Construction shall be by butt-welding with a minimum 20% radiography. Flanged connections shall be minimised.

6.1.12 All insulation and gaskets shall be asbestos free.

6.1.13 Insulating flange sets shall be provided between dissimilar materials as required.

6.1.14 Aluminium or copper alloys shall not be used for any component in the piping systems.

6.1.15 The use of 1.25Cr-0.5Mo alloy shall be a minimum requirement for piping systems having a design temperature above 425°C.

TECHNICAL CONDITION & SCOPE OF WORK FOR
PIPING SUPPLY & ERECTION WORK

FOR

COMMON EFFLUENT TREATMENT FACILITY

AT ALATHUR, KANCHEEPURAM DISTRICT

TAMILNADU

ΓENTS

SECTION NUMBER	DESCRIPTION	SHEET NUMBER
1.0	GENERAL PIPING SCOPE OF WORK	
2.0	DESIGN & DETAILED ENGINEERING	
3.0	BIDDER'S RESPONSIBILITY	
4.0	DRAWING/ DOCUMENTATION SCHEDULE	
5.0	PACKAGING	
6.0	DOCUMENTATION WITH BID	

:HMENTS

ATTACHMENT NUMBER	DESCRIPTION	No.of sheets
PC94-PNMP-TS001	System Description of Effluent Treatment Plant and Hookup From different units	17
PC94-PNMP-02-0012 Rev. 00	Piping Design & Equipment Layout Philosophy (Package Enquiry)	31
ES-6004	Engg. Standard Fabrication, Assembly & Erection of Piping.	28
ES-6018	Engg. Standard Underground piping	20
PC94-7615-0001	Indicative Route plan & B/L connection	1
	Index of Piping Material Classes (confirmed by process department)	
PC94-PDS:PS	Support Standard	8

1.0 GENERAL PIPING SCOPE OF WORK

1.1 The detail scope of work includes such as but not limited to complete management, Design, Detailed Engineering , to provide all the necessary data, drawings, documents required as per the project requirements, Procurement, Packing , Supply of complete piping system with all consumables, loading, transportation of materials, unloading , storage at work site, shop & site Fabrication, Erection, Installation, Supporting, Non-Destructive Testing (NDT) & required Inspection , pre-heating, dye-penetrant test, Magnetic Particle Test, post weld heat treatment, radiography , Testing, Flushing, Air drying, blowing , cardboard-blasting, seal/leak-testing, Pre-Commissioning, Trial run, Commissioning and Guarantee of all the associated works pertaining to complete piping system and related facilities for **COMMON EFFLUENT TREATMENT SYSTEM PACKAGEas per P&ID'S and Utility Flow diagram at SIDCO PHARAMCEUTICAL COMPLEX, ALATHUR, TAMILNADU.**

1.2 Design, material, fabrication and erection shall be in accordance with latest edition of ASME B 31.3 chemical plant and petroleum refinery piping code. The dimensions, manufacturing tolerances shall conform to applicable standards.

1.3 All works described in this package shall be performed in accordance with the design basis, specifications, drawings, and other requirements of bid package and shall be subject to Owner/PMC review and approval.

1.4 MATERIAL OF CONSTRUCTION

Materials as per internationally acceptable code shall be used for piping based on service requirement. All materials for piping Components shall conform to IS, ASTM or API Specifications. All piping materials and valves shall be procured from the reputed approved suppliers/vendors.

1.5 Cost of piping job shall also include the cost of supervision, Labour, overheads / profits, materials, consumables, scaffolding and all other associated arrangements required to execute the related activities of this package.

1.6 VALVES :

In general the following valve specifications will be adopted:

All valves provided shall be of approved make confirming to relevant IS specifications on

material of construction and sizing criteria.

All process pumps discharge will have NON RETURN VALVE (except high pressure pump).

All process flow control lines (other than solenoid valves) will be generally PVC Ball Valves as the pipe size does not exceed 150 NB and due to the nature of the liquid conveyed being of unstable Langlier Index.

Solenoid valves will be electrically operated Gate / Ball / Globe valves

R.O. reject control valve will be Gate / Needle valve

Foot Valve for pumps will be NRV type with strainer

Effluent and Solids handling pump will have Y Strainer in the suction side.

Note: During detailed engineering, PP ball valves may also be provided in the place of PVC depending on duty condition and valve stability.

Hydrostatic & Pneumatic testing shall be carried out for all valves i.e. 100% quantity as

per relevant standard.

All valves shall be operated and checked for 100% trouble free operation.

1.7 PIPING INTER - CONNECTION

Piping Interconnection and all utilities lines shall be provided at one side of the battery limit on the Pipe Rack and shall be finally indicated later by PRINCIPAL(By individual Pharma Company). All incoming and outgoing utilities shall be provided with isolation valves along with companion flanges , gaskets & fasteners at the battery limit of this package at a single point.

The specifications provided herein is to be read in conjunction with Indicative P&ID drawing No: (Please refer Annexure I).
The information provided is for the Bidder to be able to evaluate the project requirements and to place his Price Bid offer. These are only guidelines and the specifications can change during Detailed Engineering.

Piping:

In general, the following piping specifications will be adopted:

Process Piping – Low pressure lines	Industrial PVC m.o.c. of approved ASME/ API/IS and other applicable standard approved make – Finolex / Astral and equivalent
Process Piping – High Pressure Lines	R.O. stage 1 & 2 High Pressure Pump discharge, R.O. stage 1 & 2 feed lines, R.O. Stage 1 & 2 reject lines upto reject control valve will all be in SS316 SCHEDULE 40.
Dosing systems	Suction of dosing pumps will be flexible Teflon / Industrial Grade PVC(Rigid) Discharge will beIndustrial Grade PVC(Rigid)
Note: Process parameters may vary w.r.t. to Langlier Index of the liquid conveyed and hence metal pipes have been consciously avoided.	

1.8 SPARES

BIDDER shall quote for recommended spares for valves for two years of trouble free operation and commissioning of this package unit.

1.9 After completion of erection jobs, all piping system will be suitably hydraulically/pneumatically tested as per the test pressure indicated in the approved line list / relevant document & standard .

2.0 DESIGN AND DETAILED ENGINEERING

2.1 Collection of all data/ information furnished in the bid package and additionally collected/generated by BIDDER.

- Finalization of design data/ basis for carrying out design , detailed Engineering for complete **EFFLUENT TREATMENT SYSTEM PACKAGE** as per project specifications, contained in this Enquiry documents.

2.1.1 Performing design and detailed engineering of the following:

a) Complete piping system for COMMON EFFLUENT TREATMENT SYSTEM.

b) Carry Out all necessary calculations in accordance with approved design basis, drawings/documents and requirements of this bid package.

c) Finalization of layouts for the unit and preparation of construction drawing, preparation of piping drawings, equipment layouts, piping general layout drawings (GAD's) , pipe supports, piping

isometrics. Typical indicative sketches/drawings included in this bid package document shall be taken as broad basis for developing the layouts. BIDDER shall plan his piping layouts in such a way so as to minimize the area requirement while giving due importance to ease of access, operation and maintenance of the facilities installed by the BIDDER. The fabrication/erection & all other piping jobs shall be carried out based on the "Approved for Construction (AFC)" Drawings.

d) Carrying out Material Take Off for the entire piping system.

e) The detail design shall take into consideration of all stipulations, practices followed by various Statutory Regulations/authorities for all types of piping.

2.2 PROCUREMENT AND SUPPLY

2.2.1 BIDDER shall procure and supply all materials whatsoever required for temporary/permanent installation of piping system in sequence and at appropriate time. All equipments, materials, components etc shall be suitable for the service and the design life of the system .

2.2.2 BIDDER shall procure all materials, components, equipments, consumables etc required for successful completion of the piping system. BIDDER shall also procure spares required for pre-commissioning and commissioning/start-up the as recommended for all the items supplied by him as per specifications provided in this bid package. Where no specifications are available in the contract, the same shall be prepared by the BIDDER, and shall be subject to PRINCIPAL'S approval.

2.2.3 Material take off with complete description of size, rating, material, thickness and specifications.

2.2.4 Preparation and finalization of data sheets for all piping materials e.g. all valves etc. All data-sheets shall be subject to review and approval by PRINCIPAL.

2.2.5 Preparation of Material requisitions, Request for Quotation & its evaluation and recommend BIDDERS for PRINCIPAL'S approval. Preparation of purchase requisitions, review of BIDDER'S drawings and calculations, approval of manufacturing procedures wherever necessary, and the party inspection at manufacturer's works of the materials by reputed agencies as required. Quality control and expediting of all procured items at BIDDER'S shop or at fabrication yard.

3.6.1 BIDDER shall procure materials as per specifications and list of approved Vendors/Suppliers (for major Items) included in the bid document.

2.2.7 Carry out proper documentation of inspection and quality assurance programs for all equipment and bulk materials duly approved by PRINCIPAL. BIDDER shall maintain an accurate and traceable listing of procurement records for the location, quality and character of all permanent materials in the Project.

2.2.8 BIDDER shall immediately report to the PRINCIPAL of all changes which will affect material quality , and take necessary corrective actions. Purchase requisitions including Purchase Orders of all major items shall be approved by PRINCIPAL. For balance items, records shall be furnished for information only.

Compliance with BIDDERS and supplier's instructions and recommendations for transportation, handling, installation and commissioning.

.

2.3 PAINTING

All the painting material will be bought & supplied from the approved vendor list. Technical requirement for shop & site application of Paint and Protective Coating or relevant equivalent IS Standard applicable. A painting and cleaning procedure shall be taken approval from Owner/PMC before startup of job.

2.4 CONSTRUCTION

All construction works will be carried out as per “Approved for Construction” drawings, procedures, specifications and applicable codes and standards. Any changes at site shall also need prior approval from the Owner/PMC and revision of drawings.

BIDDER shall procure and supply all materials whatsoever required for temporary/permanent installations of piping system in required and at appropriate time. All equipment, materials, components etc. shall be suitable for the intended service and the design life of the system. Wherever no specification is available in the contract, the same shall be prepared by the BIDDER and shall be subject to Owner/PMC approval.

3.0 BIDDER’S RESPONSIBILITY

All works shall be carried out by Bidder in accordance with the drawings / documents / specifications indicated in the subsequent paragraphs.

3.1 Specifications:

3.2 Standards:

3.3 Piping Support Standards:

3.4 Drawings:

3.5 Design Review:

Bidder shall submit all proposal designs, analysis, drawings, installation and testing procedure for review & approval by PRINCIPAL as mentioned in the scope work. Bidder shall as a minimum, provide above deliverables for PRINCIPAL'S information / records & review / approval.

3.6 Typical Plot Plan drawing of COMMON EFFLUENT TREATMENT SYSTEM PACKAGE is enclosed in the bid package. This drawing is INDICATIVE only and is furnished for Bidder's information. Issued for construction (IFC) drawings shall be prepared by BIDDER after detailed engineering being done by him and shall be subject to approval by the PRINCIPAL.

3.7 The BIDDER shall submit separately, the material take off for piping, valves, fittings and all other accessories as per requirements.

3.8 The BIDDER shall obtain statutory approval from various authorities having jurisdiction over the area as necessary for construction of the unit package.

4.0 DRAWINGS/ DOCUMENTATION SCHEDULE

Bidder shall furnish all the drawings/ documents to PRINCIPAL for comments/ approval. He shall incorporate all comments/ modification suggested by PRINCIPAL. The drawings/documents should be properly organised, supplied & submitted as per documentation schedule.

5.0 PACKAGING

Packaging of piping items shall be as per the guidelines of Owner/PMC.

6.0 DOCUMENTATION WITH BID

Following drawings/documents must be submitted along with the bid.

i) Proposed equipment layout drawing.

ii) Proposed piping Layout drg.

iii) Quality control procedure & plan for piping system.

iv) Completion schedule of piping job in Bar-chart format.

v) List of all construction equipments, tool-tackles & man power resources proposed to be used.

vi) Clause wise list of deviations / exclusions, if any, to bid requirements shall be furnished. BIDDER is cautioned that exclusions and deviations listed elsewhere in bidder's offer shall not be considered for evaluation.

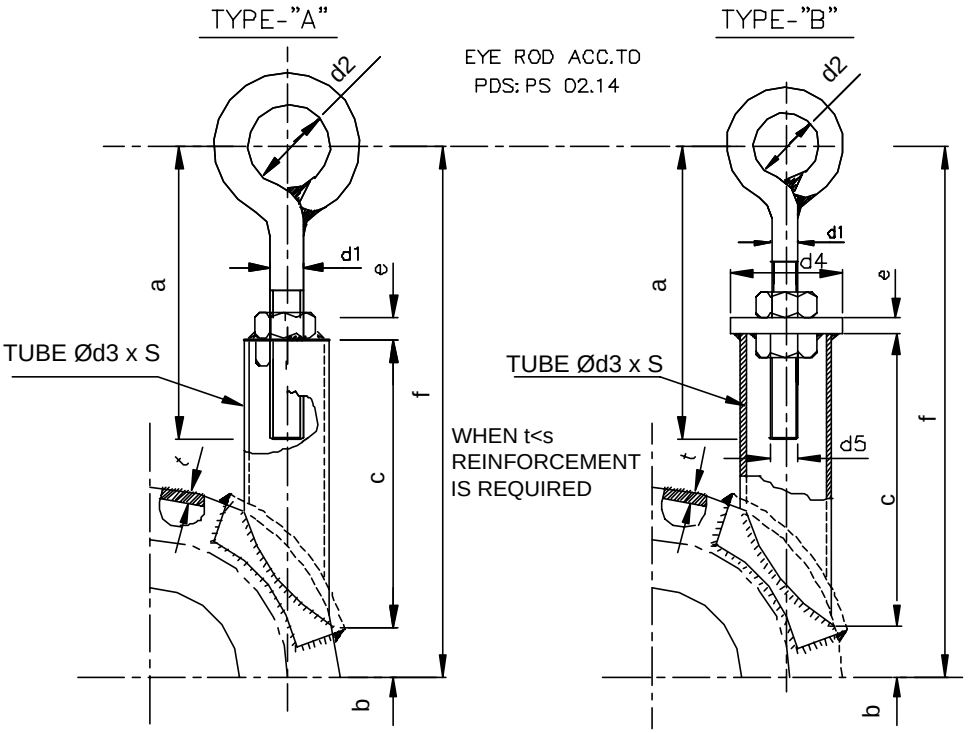

MATR:

REINFORCEMENT AND TUBE:SAME AS FOR PIPE

OTHER PARTS:CARBONSTEEL (unless otherwise specified)

PIPE SIZE		TYPE	DIMENSIONS TUBE												WEIGHT (APPROX) Kg	MAX. LOAD AT 300°C Kg
DN mm	NPS Inches		a	b	c	d_1	d_2	d_3	s	d_4	d_5	e	f min.	f max.		
40	1 ½	A	150	41	105	12	25	26.9	2.3			5	226	291	0.38	500
50	2		150	57	110	12	25	26.9	2.3			5	247	312	0.38	500
65	2 ½		185	75	120	16	30	33.7	2.6			6	286	373	0.74	850
80	3		185	90	145	16	30	33.7	2.6			6	326	413	0.78	850
100	4	B	210	113	160	20	35	48.3	2.6	60	24	10	389	467	1.72	1250
125	5		210	142	170	20	35	48.3	2.6	60	24	10	428	506	1.75	1250
150	6		250	176	180	24	40	60.3	2.9	70	28	12	487	587	2.85	2250
200	8		250	245	210	24	40	60.3	2.9	70	28	12	586	686	2.98	2250
250	10		260	296	245	30	45	88.9	3.2	100	35	16	691	777	5.71	2850
300	12		260	364	250	30	45	88.9	3.2	100	35	16	764	850	5.75	2850
350	14		305	396	285	36	65	114.3	3.6	130	42	20	855	957	10.39	5300
400	16		305	465	285	36	65	114.3	3.6	130	42	20	924	1026	10.39	5300
450	18		335	494	345	42	75	168.3	4.5	185	48	24	1032	1140	19.83	7150
500	20		335	562	345	42	75	168.3	4.5	185	48	24	1105	1213	19.83	7150
600	24		360	700	345	48	85	168.3	4.5	185	56	24	1247	1367	23.57	9400

This document is the property of Projects & Development India Limited (PDIL) and not to be copied or reproduced or shown to third parties without the written permission of PDIL.

This document is the property of Projects & Development India Limited (PDIL) and not to be copied or reproduced or shown to third parties without the written permission of PDIL.

The spacing between pipes shall be calculated using the following relationship :

$$L = \frac{D_1}{2} + \frac{D_2}{2} + A$$

Where L = Spacing between centre lines of pipes;

D_1, D_2 & A shall have the dimensions as indicated below :

CASE	I PIPE	II PIPE	D_1	D_2	A
1.	Bare	Hot insulated	a) O.D. of bare pipe	a) O.D. of insulation / O.D. of flange (whichever is greater)	25
			b) O.D. of flange of bare pipe	b) O.D. of insulation	
		Cold insulated	a) O.D. of bare pipe	a) O.D. of insulation over the flange (3)	25
			b) O.D. of the flange of bare pipe	b) O.D. of insulation	
2.	Hot Insulated	Hot Insulated	O.D. of insulation	O.D. of insulation / O.D. of the flange (whichever is greater)	50
		Cold Insulated	O.D. of insulation	O.D. of the insulation over the flange (3)	25
3.	Cold Insulated	Cold Insulated	O.D. of the insulation over the flange of larger pipe (3)	O.D. of the insulation of smaller pipe	25
4.	Bare (with flanges)	Bare (with flanges)	O.D. of the flange of larger pipe	O.D. of smaller pipe	25
5.	Bare (without flanges)	Bare (without flanges)	O.D. of the pipe	O.D. of the pipe	25

Note : (1) In case 1 larger values of the spacing as calculated with dimensions listed under (a) & (b) shall be adopted.

(2) Tables 1, 2 & 3 give the spacings calculated for cases 4 & 5.

(3) In case of cold insulated lines, it shall also be checked that minimum clear spacing (Dimension A) is provided between the cage of support attachment (Clamp etc.) and the governing dimension of the pipe.

(4) Spacings may have to be increase to accomodate the internal movement of the pipe lines one to thermal expansion.

(5) Calculation values of the spacing L shall be rounded off to the multiples of ten.

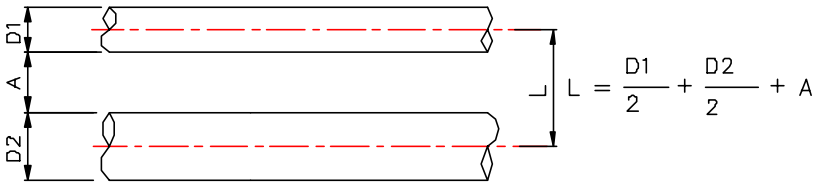

TABLE - 1

A	I	120		100						80											A	
	NPS	20″	18″	16″	14″	12″	10″	8″	6″	5″	4″	3″	2½″	2″	1½″	1″	¾ ″	½ ″	3/8″		NPS	
80	3/8″	370	340	310	280	270	240	210	190	160	150	140	130	120	120	110	110	100	100	660	20″	25
	½ ″	370	340	310	280	270	240	220	190	170	150	140	130	130	120	110	110	110	600	640	18″	
	¾ ″	370	350	310	290	270	240	220	190	170	150	140	140	130	120	110	110	560	580	610	16″	
	1″	380	350	310	290	270	250	220	200	170	160	150	140	130	130	120	500	540	550	590	14″	
	1½ ″	380	360	320	300	280	260	230	200	180	170	150	150	140	130	450	480	520	530	570	12″	
	2″	390	360	330	300	290	260	230	210	180	170	160	150	140	390	420	460	500	510	540	10″	
	2½ ″	400	370	340	310	290	270	240	220	190	180	170	160	330	360	400	430	470	480	520	8″	
	3″	400	380	340	320	300	280	250	220	200	190	170	260	300	340	370	400	440	460	490	6″	
	4″	420	390	350	330	310	290	260	240	210	200	230	250	290	320	360	390	430	440	480	5″	
	5″	430	400	370	340	330	300	270	250	220	200	220	240	270	310	340	380	420	430	460	4″	
100	6″	450	430	400	370	350	330	300	270	170	190	210	220	260	300	330	360	400	420	450	3″	
	8″	480	450	420	390	380	350	320	160	170	190	200	220	260	290	330	360	400	410	450	2½ ″	
	10″	510	480	440	420	400	380	140	150	160	180	190	210	250	280	320	350	390	400	440	2″	
	12″	530	510	470	440	430	130	140	150	150	170	190	200	240	280	310	340	380	400	430	1½ ″	
	14″	550	520	490	460	120	130	130	140	150	160	180	200	230	270	300	340	380	390	420	1″	
	16″	570	550	510	110	110	120	130	140	140	160	180	190	230	270	300	330	370	390	420	¾ ″	
120	18″	610	580	110	110	110	120	130	130	140	160	180	190	230	270	300	330	370	380	420	½ ″	
	20″	630	100	100	110	110	120	120	130	140	160	170	190	230	260	290	320	360	370	410	3/8″	
	NPS		3/8″	½ ″	¾ ″	1″	1½″	2″	2½″	3″	4″	5″	6″	8″	10″	12″	14″	16″	18″	20″	NPS	A
		A	25																			II

TABLE - 2

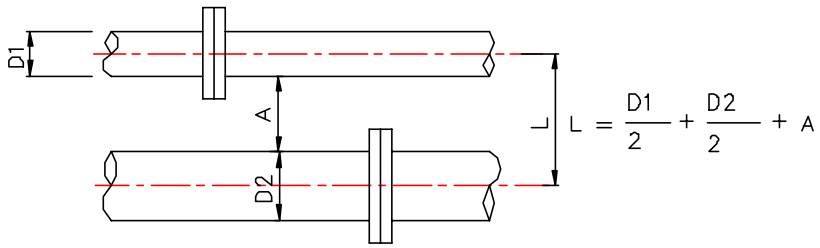

This document is the property of Projects & Development India Limited (PDIL) and not to be copied or reproduced or shown to third parties without the written permission of PDIL.

Rev.	Date	Purpose	Prepared	Reviewed	Approval
0					

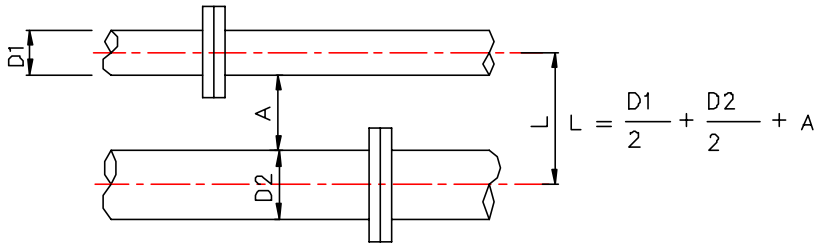

TABLE - 3

A	25														A
	NPS inch	14″	12″	10″	8″	6″	5″	4″	3″	2½ ″	2″	1½ ″	1″	¾ ″	½ ″	3/8 ″
25	3/8″	370	330	290	250	220	200	170	150	150	140	120	110	110	100	100
	½ ″	370	330	290	260	220	200	170	160	150	140	130	110	110	110	
	¾ ″	370	340	300	260	220	200	180	160	150	140	130	110	110		
	1″	370	340	300	260	220	200	180	160	160	140	130	120			
	1½ ″	380	350	310	270	230	210	190	170	160	150	140				
	2″	390	350	310	280	240	220	190	180	170	160					
	2½ ″	400	360	320	280	250	230	200	180	180						
	3″	400	370	330	290	250	230	210	190							
	4″	410	380	340	300	260	240	220								
	5″	430	390	350	310	280	260									
	6″	440	410	360	330	290										
	8″	470	430	390	350											
	10″	490	460	420												
	12″	520	480													
	14″	550														

This document is the property of Projects & Development India Limited (PDIL) and not to be copied or reproduced or shown to third parties without the written permission of PDIL.

Rev.	Date	Purpose	Prepared	Reviewed	Approval
0					

This document is the property of Projects & Development India Limited (PDIL) and not to be copied or reproduced or shown to third parties without the written permission of PDIL.

1.0 GENERAL

1.1 This standard lays down guidelines for the selection and application of pipe supports and covers standard types and installation. The modification of the standard types of piping supports described in this standard may be made only in exceptional cases.

2.0 GENERAL REQUIREMENTS

2.1 The supporting systems shall provide for and control the free or intended movement of the piping including its movement in relation to that of connected equipment. Vibration in the pipe shall be taken care of while deciding supports.

2.2 A careful study shall be made of the piping layout in relation to the surrounding structure, adjacent piping and equipment before selecting the type of support to be used at each supporting point. Maximum utilisation of the existing structurees shall be made for supports.

2.3 Supports shall be selected to withstand all static and dynamic condition of loading to which the piping and associated equipment may be subjected.

Load calculations where required shall give consideration to the following :

(a) Weight of pipe, valves, flanges, fittings, insulating materials, suspended hanger components and normal fluid contents.

(b) Weight of hydrostatic test fluid or cleaning fluid if normal operating fluid content is lighter.

(c) Additional loading that may occur during erection.

(d) Intentional use of restraint against thermal expansion.

(e) Reaction forces due to operation of safety and relief valves.

(f) Wind loadings on outdoor piping.

(g) Lateral friction force on the trestles due to expansion of pipe.

(h) Seismic Load

The criteria for calculating maximum spacing for horizontal pipes shall be as indicated in Tables 1 & 2.

Support spacing calculated on the basis of these criterian are tabulated in PS04.

3.0 MATERIAL

3.1 Materials of supports shall be as per individual supports standards and shall be used within the temperature limitations mentioned therein.

3.2 Pipe supporting elements subject to corrosion or electrolysis shall be suitably protected.

This document is the property of Projects & Development India Limited (PDIL) and not to be copied or reproduced or shown to third parties without the written permission of PDIL.

4.0 DIMENSIONAL REQUIREMENTS

4.1 Hangers and supports shall be dimensionally compatible with the outside diameter of pipe or if specified the outside diameter of the insulation.

4.2 Hangers for the suspension of NPS 2″ and larger pipe shall be capable of adequate vertical adjustment.

5.0 DETAILS OF TYPES OF SUPPORTS AND APPLICATION

5.1 The selection of hangers and supports shall be made to provide the piping system with the degree of control that its operating and design characteristics require. The simplest assembly of components that fulfills this requirement shall be most desirable.

Piping supports for pipe lines at temperatures above 500°C are critical and shall be decided more carefully considering piping layout, flexibility and the equipment to which the piping is connected.

TABLE - 1

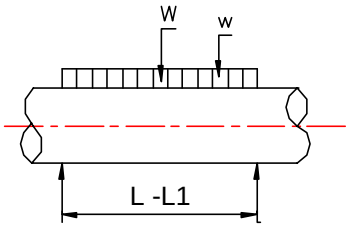

		Allowable Stress Kg/cm²	Maximum Distance L in meters	Deflection y mm	Maximum Overload W concentrated at centre
Steel Pipes	Uniformlay distributed load	$f = \frac{10wL^2}{Z} = 130$	$L = 3.6\sqrt{\frac{Z}{w}}$	For temp. < 300°C $y = \frac{0.05wL^4}{I}$ For temp > 300°C $y = \frac{0.06wL^4}{I}$	--
	Uniformly distributed load with concentrated load W at centre	$f = \frac{10L_1}{Z}(wL_1 + 2W) = 130$	$L_1 < L$	For temp. < 300°C $y = \frac{0.05L^3}{I}(wL_1 + 1.6W)$ For temp. > 300°C $y = \frac{0.06L^3}{I}(wL_1 + 1.6W)$	$W = \frac{6.5Z}{L_1} - 0.5wL_1$
Alumi-nium Pipes	Uniformly distributed	$f = \frac{10wL^2}{Z} = 15$	$L = 1.2\sqrt{\frac{Z}{w}}$	$y = \frac{0.15wL^4}{I}$	

FORM NUMBER 02-0000-0021 F2 REV 0

TABLE - 2

	Maxm. distance L in metres	
	For pipes connected directly to vibrating equipments	For pipes connected indirectly to vibrating equipments
Steel Pipes	$L < \left[\frac{I}{w}\right]^{1/4}$	$L < 1.30\left[\frac{I}{w}\right]^{1/4}$
Aluminium Pipes	$L < 0.7\left[\frac{I}{w}\right]^{1/4}$	$L < \left[\frac{I}{w}\right]^{1/4}$

Symbols :

w = Uniformly distributed load, kg/m (Wt. of pipe + Fluid + Insulation)

W = Concentrated load in kg (Like of gate valve, flange etc.)

y = Deflection in mm

L = Distance in metres between supports with uniformly distributed load w.

L_1 = Distance in meters between supports with uniformly distributed load w and concentrated load W.

Z = Section modules in cm^3

I = Moment of inertia of pipe in cm^4
Modules of elasticity assumed
2,000,000 kg/cm^2 for steel pipes
650,000 kg/cm^2 for aluminium pipes

This document is the property of Projects & Development India Limited (PDIL) and not to be copied or reproduced or shown to third parties without the written permission of PDIL.

PDIL	SUPPORT SPACING (in Metres)	PDS : PS 04
		ISSUE : JAN. '99
		SHEET 1 OF 1

NPS inches	Carbon Steel Pipes										Stainless Steel Pipes										Aluminium Pipes to PDS : P 020			
	Uninsulated				Insulated (t < 450°C)						Uninsulated				Insulated (t ≤ 450°C)						Uninsulated			
	Empty	Filled with Water			Empty			Filled with Water			Empty	Filled with Water			Empty			Filled with Water			Empty	Filled with Water		
	Class ≤1500 lbs	Class ≤ 150 lbs	Class 300 lbs 600 lbs	Class 900 lbs	Class ≤ 150 lbs	Class 300 lbs 600 lbs	Class 900 lbs	Class ≤ 150 lbs	Class 300 lbs 600 lbs	Class 900 lbs	Class ≤ 1500 lbs	Class ≤ 150 lbs	Class 300 lbs 600 lbs	Class 900 lbs	Class ≤ 150 lbs	Class 300 lbs 600 lbs	Class 900 lbs	Class ≤ 150 lbs	Class 300 lbs 600 lbs	Class 900 lbs	PN ≤ 10	PN 1	PN 6	PN 10
½ //	2.0	Same as 300/600 lbs.	2.0	2.0	Same as 300/600 lbs.			Same as 300/600 lbs.			2.0	2.0	2.0	2.0							1.5	1.2	1.2	1.2
¾ //	2.0		2.0	2.0							2.0	2.0	2.0	2.0							1.5	1.2	1.2	1.2
1//	2.5		2.5	2.5	1.5	1.5		1.5	1.5		2.5	2.5	2.5	2.5							2.0	1.2	1.2	1.2
1 ½ //	3.5		3.0	3.0	2.0	2.0		2.0	2.0		3.5	3.0	3.0	3.0	2.5	2.5	2.5	2.5	2.5	2.5	2.5	1.5	1.5	1.5
2//	4.0		3.5	3.5	2.0	2.5		2.0	2.5		4.0	3.0	3.0	3.5	2.5	2.5	2.5	2.5	2.5	2.5	2.5	1.5	1.5	1.7
2 ½ //	4.5		4.0	4.0	3.0	3.0		2.5	3.0		4.5	3.5	3.5	4.0	3.0	3.0	3.0	3.0	3.0	3.0	3.0	1.7	1.7	1.7
3//	5.0		4.5	4.5	3.5	3.5		2.5	3.5		5.0	4.0	4.0	4.5	3.5	4.0	3.5	3.0	3.0	3.5	3.5	1.7	1.7	2.0
4//	6.0		5.0	5.0	4.0	4.0		3.0	4.0		6.0	4.0	4.0	5.0	4.0	4.5	4.0	3.0	3.5	4.0	4.0	1.8	1.8	2.0
5//	7.0		5.0	6.0	4.5	5.0		3.5	4.5		7.0	4.5	4.5	6.0	5.0	5.5	5.0	3.5	4.0	4.5	4.0	1.8	2.0	2.5
6//	8.0		5.5	6.5	5.0	6.0		4.0	5.5		8.0	4.5	5.5	6.5	5.0	6.0	6.0	4.0	4.5	5.5	4.5	2.0	2.0	2.5
8//	9.0	6.0	6.5	7.5	6.0	6.0	7.0	4.5	5.0	6.5	9.0	5.0	6.0	7.5	6.0	7.0	7.0	4.0	5.0	6.5	5.0	2.0	2.5	3.0
10//	10.0	6.5	7.5	8.5	6.5	7.0	8.0	5.0	6.0	7.5	10.0	5.5		8.5	7.0		8.0	4.5		7.5	6.0			
12//	11.0	6.5	7.5	9.0	7.5	8.0	9.0	5.5	6.5	8.0	11.0	5.5		9.0	8.0		9.0	5.0		8.0	6.5			
14//	12.0	7.0	8.5		8.5	9.0		6.0	7.0		12.0	6.0			8.5			5.0			7.0			
16//	12.5	7.5	9.0		9.0	10.0		6.5	8.0		12.0	6.0			9.0			5.5			7.0			
18//	13.5	7.5	9.0		10.0	10.5		7.0	8.0		13.5	6.0			9.5			5.5			7.5			
20//	14.0	7.5									14.5	6.0			10.0			5.5			8.0			
24//	15.5	8.0																			9.0			
28//	16.5	8.5																			10.0			
32//	18.0	9.0																			10.0			
36//	19.0	9.5																						
40//	20.5	9.5																						
48//	22.0	11.0																						

NOTES : 1. In case it is difficult to install supports according to the above spacing (Road crossings etc.).Spacing can be increased by 25% for pipes of NPS ≤ 5// and by 15% for pipes of NPS ≥ 6// .

2. Support spacings are calculated on the basis of formulae given in PDS : PS 09 Sheet 2 and 3.

Rev.	Date	Purpose	Prepared	Reviewed	Approval
0					

This document is the property of Projects & Development India Limited (PDIL) and not to be copied or reproduced or exhibited to third parties without permission of PDIL

This document is the property of Projects & Development India Limited(PDIL)and not to be copied or reproduced or shown to third parties without the written permission of PDIL.

ENGINEERING STANDARD

FABRICATION, ASSEMBLY AND ERECTION OF PIPING

REV.	DATE	PURPOSE	PREPARED	REVIEWED	APPROVED
0	SEP. '99	ISSUED FOR IMPLEMENTATION			

This document is the property of Projects & Development India Limited(PDIL)and not to be copied or reproduced or shown to third parties without the written permission of PDIL.

INDEX

1.0 Scope
2.0 Reference Standards
3.0 Welding
3.1 Welding Responsibility
3.2 Welding Qualifications
3.3 Welding Materials
3.4 Preparation for Welding
3.5 Welding Requirements
3.6 Weld Repair
4.0 Preheating
5.0 Heat Treatment
6.0 Bending and Forming
7.0 Assembly and Erection

This document is the property of Projects & Development India Limited(PDIL)and not to be copied or reproduced or shown to third parties without the written permission of PDIL.

1.0 SCOPE

1.1 This specification covers the requirements of fabircation, assembly and erection of Carbon Steel, Alloy Steel and Stainless Steel pipes and fittings. These requirements conform to ASME Code of pressure piping Process piping ASME B 31.3 - 1999. This standard is meant for easy reference by the Inspector to all requirements of fabrication, assembly and erection of pipes at one place and should not be used as purchase requirements for an enquiry or an order.

1.2 For pipes to be used for steam services, the requirements of Indian Boiler Regulations shall apply in addition to all non-conflicting requirements of this specification.

1.3 Recommendations contained in this document do not in any way release a welding contractor from his responsibility with regard to correct choice of welding materials and procedures, neither do they constitute any commitment on the part of PDIL with regard to payment of any expenses incurred.

2.0 REFERENCE STANDARDS

ASME B 31.3 -- Code for pressure piping - Process Piping

ASME BPV Code Sec.II Part C -- Specification for Welding Rods, Electrodes and Filler Metals

AWS A 5.1 -- Carbon Steel Electrodes for Shielded Metal Arc Welding

AWS A 5.4 -- Stainless Steel Electrodes for Shielded Metal Arc Welding

AWS A 5.5 -- Low Alloy Steel Covered Arc Welding Electrodes

AWS A 5.11 -- Nickel and Nickel Alloy Welding Electrodes for Shielded Metal Arch Welding

ASME BPV Code Sec.IX -- Welding Qualification

3.0 WELDING

3.1 Welding Responsibility

Each employer is responsible for the welding done by the personnel of his organization and, except as provided in paras 3.2.2 and 3.2.3 shall conduct the tests required to qualify welding procedures and to qualify and as necessary requalify welders and welding operators.

3.2 Welding Qualifications

3.2.1 Qualification Requirements

(a) Qualification of the welding procedures to be used and of the performance of welders and welding operators shall conform to the requirements of the BPV Code, Section IX except as modified herein.

(b) Where the base metal will not withstand the 180° guided bend required by Section IX, a qualifying welded specimen is required to undergo the same degree of bending as the base metal, within 5°.

(c) The requirements for preheating in para 4.0 and for heat treatment in para 5.0 as well as such requirements in the engineering design, shall apply in qualifying welding procedures.

(d) When impact testing is required by this Standard or the engineering design, those requirements shall be met in qualifying welding procedures.

(e) To reduce the number of welding procedure qualifications required, P-Numbers or S-Numbers and Group Numbers are assigned in the BPV Code, Section IX, to groupings of metals generally based on composition, weldability and mechanical properties, insofar as practicable. The P-Numbers or S-Numbers for most metals are listed in Table A-1 of ASME B 31.3. See Section IX, QW/QB-422, for Group Numbers for respective P-Numbers and S-Numbers. Use of Section IX, QW-420.2 is required for this Standard.

3.2.2 **Procedure Qualification by Others**

Each employer is responsible for qualifying any welding procedure that personnel of the organization will use. Subject to the specific approval of the Inspector, welding procedures qualified by others may be used, provided that the following conditions are met.

(a) The Inspector shall be satisfied that :

1) the proposed welding procedure specification (WPS) has been prepared, qualified and executed by a responsible, recognized organization with expertise in the field of welding; and

2) the employer has not made any change in the welding procedure.

(b) The base material P-Number is either 1, 3, 4 Gr.No.1 (1¼ Cr max.), or 8; and impact testing is not required.

(c) The base metals to be joined are of the same P-Number, except that P-Nos. 1, 3 and 4 Gr.No.1 may be welded to each other as permitted by Section IX.

(d) The material to be welded is not more than 19 mm in thickness. Postweld heat treatment shall not be required.

(e) The design pressure does not exceed the ASME B 16.5, Class 300 rating for the material at design temperature; and the design temperature is in the range -29°C to 399°C, inclusive.

This document is the property of Projects & Development India Limited(PDIL)and not to be copied or reproduced or shown to third parties without the written permission of PDIL.

(f) The welding process is SMAW (Shielded Metal Arc Welding) or GTAW (Gas Tungstan Arc Welding) or a combination thereof.

(g) Welding electrodes for the SMAW process are selected from the following classifications.

AWS A 5.1	AWS A 5.4	AWS A 5.5
E6010	E308-15, -16	E7010 - A1
E6011	E308L-15, -16	E7018 - A1
E7015	E309-15, -16	E8016 - B1
E7016	E310-15, -16	E8018 - B1
E7018	E-16-8-2-15, -16	E8015 - B2L
	E316-15, -16	E8016 - B2
	E316L-15, -16	E8018 - B2
	E347-15, -16	E8018 - B2L

Recommended electrodes and bare wires for welding of certain selected pipe materials are shown in Table 1.

The figures in Table 4A & 4B are referring to the selection of welding material in Table 1 and the letters in Table 4A and 4B are referring to the selection of preheat and postweld heat temperature in Table 2 and 3 respectively. The suitability of these electrodes and wires (or materials which may be selected as alternatives) and the suitability of preheat and postweld heat temperatures shall be demonstrated in appropriate Welding Procedure Qualifications as described in ASME Section IX.

(h) By signature, the employer accepts responsibility for both the WPS and the procedure qualification record (PQR).

(i) The employer has at least one currently employed welder or welding operator who, while in his employ has satisfactorily passed a performance qualification test using the procedure and the P-Number material specified in the WPS. The performance bend test required by Section IX. QW-302 shall be used for this purpose. Qualification by radiography is not acceptable.

The responsibility of the welding contractor shall include the provision of all materials, facilities and man powers for the procedure and performance qualification tests.

3.2.3 **Performance Qualification by Others**

To avoid duplication of effort, an employer may accept a performance qualification made for another employer, provided that the inspector specifically approves. Acceptance is limited to qualification on piping using the same or equivalent procedure wherein the essential variables are within the limits in Section IX. The employer shall obtain a copy from the previous employer of the performance

This document is the property of Projects & Development India Limited (PDIL) and not to be copied or reproduced or shown to third parties without the written permission of PDIL.

qualification test record, showing the name of the employer, name of the welder or welding operator, procedure identification, date of successful qualification and the date that the individual last used the procedure on pressure piping.

3.2.4 **Qualification Records**

The employer shall maintain a self-certified record, available to the owner (and the owner's agent) and the Inspector, of the procedures used and the welders and welding operators employed, showing the date and results of procedure and performance qualifications and the identification symbol assigned to each welder and welding operator.

3.3 **Welding Materials**

3.3.1 **Filler Metal**

Filler metal shall conform to the requirements of Section IX. A filler metal not yet incorporated in Section IX may be used with the owner's approval if a procedure qualification test is first successfully made.

3.3.2 **Weld Backing Material**

Permanent backing rings are not permitted except for use in refractor lined pipes.

When backing rings are used, they shall conform to the following :

(a) *Ferrous Metal Backing Rings*

These shall be of weldable quality. Sulfur content shall not exceed 0.05%.

(b) If two abutting surfaces are to be welded to a third member used as a backing ring nad one or two of the three members are ferritic and the other member or members are austenitic, the satisfactory use of such materials shall be demonstrated by welding procedure qualified as required by para 3.2.

Backing rings may be of the continuous machined or split-band type. Some commonly used types are shown in Fig.3.3.2.

(c) *Nonferrous and Nonmetallic Backing Rings*

Backing rings of nonferrous or nonmetallic material may be used, provided the designer approves their use and the welding procedure using them is qualified as required by para 3.2.

3.3.3 **Consumable Inserts**

Consumable inserts are not permitted.

3.4 **Preparation for Welding**

3.4.1 **Cleaning**

This document is the property of Projects & Development India Limited(PDIL)and not to be copied or reproduced or shown to third parties without the written permission of PDIL.

Internal and external surfaces to be thermally cut or welded shall be clean and free paint, oil, rust, scale and other material that would be detrimental to either the weld or the base metal when heat is applied.

Where root passes are made by GTAW (Gas Tungstan Arc Welding) or GMAW (Gas Metal Arc Welding) processes, the internal pipe surface shall be cleared before welding by means of grinding, brushing or equivalent for atleast 10 mm from the end of the pipe.

3.4.2 **End Preparation**

(a) *General*

1) End preparation is acceptable only if the surface is reasonably smooth and true and slag from oxygen or arc cutting is cleaned from thermally cut surfaces. Discoloration remaining on a thermally cut surface is not considered detrimental oxidation.

2) End preparation for groove welds specified in ASME B 16.25 or any other which meets the WPS, is acceptable. [For convenience, the basic bevel angles of ASME B 16.25 and some additional J-bevel angles are shown in Fig.3.4.2 sketches (a) and (b)].

3) The root opening is nom. 1.5 mm and shall not normally exceed 3 mm for root passes made by GTAW process and 4 mm for root passes made by GMAW or SMAW (Shielded Metal Arc Welding) process.

(b) *Circumferential Welds*

1) If component ends are trimmed as shown in Fig.3.3.2 sketch (a) or (b) to fit backing rings or consumable inserts or as shown in Fig.3.4.3 sketch (a) or (b) to correct internal misalignment, such trimming shall not reduce the finished wall thickness below the required minimum wall thickness t_m.

2) Component ends may be bored to allow for a completely recessed backing ring, provided the remaining net thickness of the finished ends is not less than t_m.

3) It is permissible to size pipe ends of the same nominal size to improve alignment if wall thickness requirements are maintained.

4) Where necessary, weld metal may be deposited inside or outside of the component to permit alignment to provide for maching to ensure satisfactory seating of rings or inserts.

5) When a girth or miter groove weld joins components of unequal wall thickness and one is more than 1½ times the thickness of the other end preparation and geometry shall be in accordance with acceptable designs for unequal wall thickness in ASME B 16.25.

This document is the property of Projects & Development India Limited(PDIL)and not to be copied or reproduced or shown to third parties without the written permission of PDIL.

This document is the property of Projects & Development India Limited(PDIL)and not to be copied or reproduced or shown to third parties without the written permission of PDIL.

3.4.3 **Alignment**

(a) *Circumferential Welds*

1) Inside surfaces of components at ends to be joined in girth or miter groove welds shall be aligned within the dimensional limits in the WPS and the engineering design.

Misalignment of pipe ends for butt welds shall not exceed 1.6 mm at any point on the bore of the pipe as shown in Fig. 3.4.3.

Alignment of girth butt joints may be achieved either by tack welding or by the use of welded yokes or pipe clamps.

2) If the external surfaces of the components are not aligned, the weld shall be tapered between them.

(b) *Longitudinal Welds*

Alignment of longitudinal groove welds (not made in accordance with ASME standard shall conform to the requirements of para 3.4.3(a).

(c) *Branch Connection Welds*

1) Branch connections which abut the outside surface of the run pipe shall be contoured for groove welds which meet the WPS requirements [see Fig.3.4.4 sketches (a) and (b)].

2) Branch connections which are inserted through a run opening shall be inserted at least as far as the inside surface of the run pipe at all points [see Fig.3.4.4 sketch (c)] and shall otherwise conform to para 3.4.3(c)(1).

3) Run openings for branch connections shall not deviate from the required contour more than the dimension m in Fig.3.4.4. In no case shall deviations of the shape of the opening cause the root spacing tolerance limits in the WPS to be exceeded. Weld metal may be added and refinished if necessary for compliance.

4) *Spacing*

The root opening of the joint shall be within the tolerance limits in the WPS.

3.5 **Welding Requirements**

3.5.1 **General**

(a) Welds, including addition of weld metal for alignment [paras 3.4.2 (b)(4) and 3.4.3 (c)(3)], shall be made in accordance with a qualified procedure and by qualified welders or welding operators.

(b) Each qualified welder and welding operator shall be assigned an identification symbol. Unless otherwise specified in the engineering design, each pressure containing weld or adjacent area shall be marked with the identification symbol of the welder or welding operator. In lieu of marking the weld, appropriate records shall be filed.

(c) Tack welds at the root of the joint shall be made with filler metal equivalent to that used in the root pass. Tack welds shall be made by a qualified welder or welding operator. Tack welds shall be fused with the root pass weld, except that those which have cracked shall be removed.

For pipe wall thickness above 8 mm bridge tacking (above the root) is preferred. Bridge tacks shall be removed completely before filler passes are added.

(d) Peening is prohibited on the root pass and final pass of a weld.

(e) No welding shall be done if there is impingement on the weld area of rain, snow, sleet or excessive wind, or if the weld area is frosted or wet.

(f) Root passes of all welds in inspection class 2 (see clause 5) and all welds in which either of the metals to be joined is austenitic steel shall be made using the GTAW process with inert backing gas. The inert gas shall preferably be Argon, although gas consisting of 85% N_2 + 15% H_2 may be used if argon is not available.

For pipes $\leq$ 2 inch nom. size, use GTAW for entire welding.

(g) *Welding End Valves*

The welding sequence and procedure and any heat treatment for a welding end valve shall be such as to preserve the seat tightness of the valve.

3.5.2 Fillet and Socket Welds

Fillet welds (including socket welds) may vary from convex to concave. The size of a fillet weld is determined as shown in Fig.3.5.2A.

(a) Typical weld details for slip-on and socket welding flanges are shown in Fig.3.5.2B; minimum welding dimensions for other socket welding components are shown in Fig.3.5.2C.

(b) If slip-on flanges are single welded, the weld shall be at the hub.

This document is the property of Projects & Development India Limited(PDIL)and not to be copied or reproduced or shown to third parties without the written permission of PDIL.

This document is the property of Projects & Development India Limited(PDIL)and not to be copied or reproduced or shown to third parties without the written permission of PDIL.

3.5.3 Seal Welds

Seal welding shall be done by a qualified welder. Seal welds shall cover all exposed threads except those for seal welded thermowell connections.

3.5.4 Welded Branch Connections

(a) Figures 3.5.4A through 3.5.4E show acceptable details of branch connections with and without added reinforcement, in which the branch pipe is connected directly to the run pipe. The illustrations are typical and are not intended to exclude acceptable types of construction not shown.

(b) Figure 3.5.4D shows basic types of weld attachments used in the fabrication of branch connections. The location and minimum size of attachment welds shall conform to the requirements herein. Welds shall be calculated in accordance with para 304.3.3 of ASME B 31.3 but shall be not less than the sizes shown in Fig. 3.5.4D.

(c) The nomenclature and symbols used herein and in Fig.3.5.4D are :

t_c = lesser of 0.7 T_b or 6 mm
T_b = nominal thickness of branch
T_h = nominal thickness of header
T_r = nominal thickness of reinforcing pad or saddle
$t_{min.}$ = lesser of T_b or T_r

(d) Branch connections, including branch connection fittings which abut the outside of the run or which are inserted in an opening in the run shall be attached by fully penetrated groove welds. The welds shall be finished with cover fillet welds having a throat dimension not less than t_c see Fig.3.5.4D sketches (1) and (2).

(e) A reinforcing pad or saddle shall be attached to the branch pipe by either:

1) a fully penetrated groove weld finished with a cover fillet weld having a throat dimension not less than t_c ; or

2) a fillet weld having a throat dimension not less than $0.7t_{min}$. See Fig.3.5.4D sketch (5).

(f) The outer edge of a reinforcing pad or saddle shall be attached to the run pipe by a fillet weld having a throat dimension not less than $0.5T_r$. See Fig. 3.5.4D sketches (3), (4) and (5).

(g) Reinforcing pads and saddles shall have a good fit with the parts to which they are attached. A vent hole shall be provided at the side (not at the crotch)

of any pad or saddle to reveal leakage in the weld between branch and run and to allow venting during welding and heat treatment. A pad or saddle may be made in more than one piece if joints between pieces have strength equivalent to pad or saddle parent metal and if each piece has a vent hole.

(h) Examination and any necessary repairs of the completed weld between branch and run shall be made before adding a pad or saddle.

3.5.5 **Fabricated Laps**

Figure 3.5.5 shows typical fabricated laps. Fabrication shall be in accordance with the applicable requirements of para 3.5.4.

3.5.6 **Welding for Severe Cyclic Conditions**

A welding procedure shall be employed which provides a smooth, regular, fully penetrated inner surface.

3.6 **Weld Repair**

A weld defect to be repaired shall be removed to sound metal. Repair welds shall be made using a welding procedure qualified in accordance with para 3.2.1 recongnizing that the cavity to be repaired may differ in contour and dimensions from the original joint. Repair welds shall be made by welders or welding operators qualified in accordance with para 3.2.1. Preheating and heat treatment shall be as required for the original welding. See also para 3.3.3 of ES 6005.

4.0 **PREHEATING**

4.1 **General**

Preaheating is used, along with heat treatment, to minimize the detrimental effects of high temperature and severe thermal gradients inherent in welding. The necessity for preheating and the temperature to be used shall be specified in the engineering design and demonstrated by procedure qualification. The requirements and recommendations herein apply to all types of welding including tack welds, repair welds and seal welds of threaded joints.

4.1.1 **Requirements and Recommendations**

Required and recommended minimum preheat temperatures for materials of various P-Numbers are given in Table 2. If the ambient temperature is below $10^{O}C$ the recommendations in Table 2 become requirements. Preheating of all materials may be carried out by any controllable means. The thickness intended in Table 2 is that of the thicker component measured at the joint.

4.1.2 **Unlisted Materials**

Preheat requirements for an unlisted material shall be specified in the WPS.

This document is the property of Projects & Development India Limited (PDIL) and not to be copied or reproduced or shown to third parties without the written permission of PDIL.

4.1.3 **Temperature Verification**

(a) Preheat temperature shall be checked by use of temperature indicating crayons, thermocouple pyrometers or other suitable means to ensure that the temperature specified in the WPS is obtained prior to and maintained during welding.

(b) Thermocouples may be temporarily attached directly to pressure containing parts using the capacitor discharge method of welding without welding procedure and performance qualifications. After thermocouples are removed, the areas shall be visually examined for evidence of defects to be repaired.

4.1.4 **Preheat Zone**

The preheat zone shall extend at least 25 mm beyond each edge of the weld.

4.2 **Specific Requirements**

4.2.1 **Dissimilar Materials**

When materials having different preheat requirements are welded together, it is recommended that the higher temperature shown in Table 2 be used.

4.2.2 **Interrupted Welding**

If welding is interrupted the rate of cooling shall be controlled or other means shall be used to prevent detrimental effects in the piping. The preheat specified in the WPS shall be applied before welding is resumed.

This document is the property of Projects & Development India Limited(PDIL)and not to be copied or reproduced or shown to third parties without the written permission of PDIL.

This document is the property of Projects & Development India Limited(PDIL)and not to be copied or reproduced or shown to third parties without the written permission of PDIL.

TABLE-1

WELDING MATERIALS

WELDING MATERIALS					
NO.	MATERIAL	COATED ELECTRODES		BARE WIRES	
		ASME SFA	CLASSIFICATION	ASME SFA	CLASSIFICATION
1	C.S	5.1	E7018	5.18	ER70S-2
2	C.Mo.	5.5	E7018	5.18	ER70S-1B
3	1 ¼ Cr.Mo	5.5	E8018-B2	--	ER515
4	2 ¼ Cr.Mo	5.5	E8018-B3	--	ER521
5	5Cr.Mo	5.4	E502-16 or -15	5.9	ER502
6	9Cr.Mo	5.4	E505-16 or -15	--	ER505
7	12Cr	5.4	E410-16 or -15	5.9	ER410
8	3 ½ Ni	5.5	To match base metal	--	--
9	18Cr.8Ni (308,308L)	5.4	E308-16 or -15 E308L-16 or 15	5.9	ER308 ER308L
10	18Cr 10Ni Cb (347)	5.4	E347-16 or -15	5.9	ER347
11	18Cr 10Ni Mo (316 316L)	5.4	E316-16 or -15 E316L-16 or 15	5.9	ER316 ER316L
12	25Cr 12Ni (309) Inconel	5.4 5.11	E309-16 or -15 ENiCrFe-3	5.9 5.14	ER309 ERNiCr-3
13	Inconel	5.11	EniCrFe-3 (Inconel 182)	5.14	ERNiCr-3 (Inconel 82)

14	Monel	5.11	ENiCu-2 (Monel 190)	5.14	ERNiCu-7 (Monel 60)
15	Nickel	5.11	ENi-I (Nickel 141)	5.14	ERNi-3 (Nickel 61)
16	25Cr 20Ni (310)	5.4	E310-16 OR -15	5.9	ER310

Table 1 shall be used as indication only.

TABLE-2

PREHEAT TEMPERATURES

Heat Treatment Symbol (Note-1)	Base Metal P-No. or S-No.	Base Metal Group	Nominal Wall Thickness, mm	Specified Min. Tensile Strength, Base Metal Mpa (ksi)	Min. Temperature, ^{O}C
A	1	Carbon steel	< 25 ≥ 25 All	≤ 490 (71) All > 490 (71)	10 80 80
B	3	Alloy steels Cr ≤ ½ %	< 13 ≥ 13 All	≤ 490 (71) All > 490 (71)	10 80 80
C	4	Alloy steels ½ % < Cr ≤ 2%	All	All	150
D	5A,5B,5C	Alloy steels 2¼ % ≤ Cr ≤ 10%	All	All	177
E	6	High alloy steels martensitic	All	All	150 (Note 2)
F	7	High alloy steels ferritic	All	All	10
	8	High alloy steels austenitic	All	All	10
G	9A,9B	Nickel alloy steels	All	All	93
H	10	Cr-Cu steel	All	All	150-204
J	10I	27 Cr steel	All	All	150 (Note 3)
K	11A SG1	8 Ni, 9Ni steel	All	All	10

This document is the property of Projects & Development India Limited(PDIL)and not to be copied or reproduced or shown to third parties without the written permission of PDIL.

L	11A SG2	5 Ni steel	All	All	10
M	21 - 52		All	All	10

Notes:

(1) P - Number or S - Number from ASME BPV Code, Section IX, QW/QB - 422

(2) Maximum interpass temperature 316°C.

(3) Maintain interpass temperature between 177°C - 232°C.

TABLE - 3

REQUIREMENT FOR HEAT TREATMENT

Heat Treatment Symbol (Note-1)	Base Metal P-No. or S-No.	Base Metal Group	Thickness mm	Specified Min. Tensile Strength, Base Metal Mpa (ksi)	Metal. Temperature Range ^{O}C	Holding Time (Note 2)	Brinell Hardness (Note-9) Max.
A	1	Carbon steel	≤ 19 > 19	All All	None 595 - 650	2.4 min./mm Minimum 1 hr.	--
B	3	Alloy steels Cr ≤ ½ %	≤ 19 > 19 All	≤ 490 (71) All > 490 (71)	None 595 - 720 595 - 720		-- 225 225
C	4 (Note-8)	Alloy steels ½ % < Cr ≤ 2%	≤ 13 > 13 All	≤ 490 (71) All > 490 (71)	None 705 - 745 705 - 745	2.4 min./mm Minimum 2 hr.	-- 225 225
D	5A,5B,5C (Note-8)	Alloy steels ≤ 3% Cr and ≤ 0.15% C	≤ 13 > 13 All	All All All	None 705 - 760 705 - 760		-- 241 241
E	6	High alloy steels martensitic A 240 Gr.429	All All	All All	732 - 788 621 - 663		241 241
F	7	High alloy steels ferritic	All	All	None	--	--
	8	High alloy steels austenitic	All	All	None	--	--
G	9A,9B	Nickel alloy steels	≤ 19 > 19	All All	None 595 - 635	2.4 min./mm Minimum 1 hr.	--

This document is the property of Projects & Development India Limited (PDIL) and not to be copied or reproduced or shown to third parties without the written permission of PDIL.

H	10	Cr-Cu steel	All	All	760 - 816 (Note-3)	1.2 min./mm Minimum ½ hr.	--
I	10H	Duplex stainless steel	All	All	(Note-5)		--
J	10I	27 Cr steel	All	All	663 - 704 (Note-4)	2.4 min./mm Minimum 1 hr.	--
K	11A SG1	8 Ni, 9Ni steel	≤ 51 > 51	All	None 552 - 585 (Note-6)		--
L	11A SG2	5 Ni steel	> 51	All	552 - 585 (Note-6)		--
N	62	Zr 60705	All	All	538 - 593 (Note-7)	Note-7 Minimum 1 hr.	--

Table 3 (Contd.)

Notes :

(1) P - Number or S - Number from ASME BPV Code, Section IX, QW/QB - 422

(2) Holding Time in min/mm (minutes per mm thickness).

(3) Cool as rapidly as possible after the hold period.

(4) Cooling rate to 649°C shall be less than 56°C/hr thereafter, the cooling rate shall be fast enough to prevent embrittlement.

(5) Postweld heat treatment is neither required nor probibited, but any heat treatment applied shall be as required in the material specification.

(6) Cooling rate shall be not greater than 167°C/hr upto 316°C.

(7) Heat treatment shall be carried out within 14 days after welding. Hold time shall be increased by ½ hr. for each 25 mm over 25 mm thickness. Cool to 427°C at a rate < 278°C/hr. per 25 mm nominal thickness, 278°Chr. max. Cool in still air from 427°C.

(8) Heat treatment temperatures listed in this table for some P.No.4 and P.No.5 materials may be higher than the minimum tempering temperatures specified in the ASTM specifications for the base material. For higher strength normalised and tempered materials there is consequently a possibility of reducing tensile properties of the base material, particularly if long holding times at higher temperatures are used.

(9) See para 331.1.7 of ASME B 31.3, reproduced below

Hardness tests of production welds and of hot bent and hot formed piping are intended to verify safisfactory heat treatment. The hardness limit applies to the weld and to the heat affected zone (HAZ) tested as close as preacticable to the edge of the weld.

This document is the property of Projects & Development India Limited (PDIL) and not to be copied or reproduced or shown to third parties without the written permission of PDIL.

(a) Where a hardness limit is specified in Table 3 at least 10% of welds, hot bends and hot formed components in each furnace heat treated batch and 100% of those locally heat treated shall be tested.

(b) When dissimilar metals are joined by welding the hardness limits specified for the base and welding materials in Table 3 shall be met for each material.

Welding Materials and Heat Treatment for Welding of Dissimilar Steels

TABLE 4A

Ferrous Material														
Materials	P No	310	316 316L	321 347	304 304L	3 ½ Ni	13Cr 405	13Cr 410	9Cr 1 Mo	5Cr ½Mo	2½Cr 1Mo	1½Cr ½Mo	C-Mo	C.S
C.S.	P-1	12A	12A	12A	12A	1G	1B	1E	1D	1D	1D	1C	1B	1A
C.Mo	P-3	12B	12B	12B	12B	2G	2B	2E	2D	2D	2D	2C	2B	
1 ½ Cr-½Mo	P-4	12C	12C	12C	12D	3C	3C	3E	3D	3D	3D	3C		
2 ½ Cr-1Mo	P-5	12D	12D	12D	12D	4D	4D	4E	4D	4D	4D			
5 Cr-½Mo	P-5	12D	12D	12D	12D	5D	5D	5E	5D	5D				
9 Cr-1Mo	P-5	12D	12D	12D	12D	6D	6D	6D	6D					
13 Cr, Type 410	P-6	12E	12E	12E	12E	7E	7E	7E						
13 Cr, Type 405	P-7	12F	12F	12F	12F	7G	12F							
3 ½ Nickel	P-9E	12G	12G	12G	12G	8G 13A,G								
18 Cr-8Ni Type 304, 304L	P-8	9F	9F	9F	9F									
18 Cr 10 Ni Type 347, 321	P-8	10F	10F	10F										
16 Cr 12Ni Type 316, 316L	P-8	11F	11F											
25 Cr 20Ni	P-8	16F												

This document is the property of Projects & Development India Limited (PDIL) and not to be copied or reproduced or shown to third parties without the written permission of PDIL.

Type 310		

TABLE 4B

Nickel Base Alloys					
Material	P.No.	Nickel	Monel	Inconel	Incoloy
C.S.	P-1	13F	14F	13F	13F
Stainless	P-8	13F	13F	13F	13F
Incoloy	P-45	13F	13F	13F	13F
Inconel	P-42	13F	13F	13F	
Monel	P-42	15F	14F		
Nickel	P-41	15F			

The figure in each block refers to the electrode or bare wire in Table1, while the letter refers to the preheat and post weld heat treatment shown in Table-2 and 3.

5.0 HEAT TREATMENT

Heat treatment is used to avert or relieve the detrimental effects of high temperature and severe temperature gradients inherent in welding and to relieve residual stresses created by bending and forming. These are basic practices which are suitable for most welding, bending and forming operations, but not necessarily appropriate for all service conditions.

5.1 General

5.1.1 Heat Treatment Requirements

(a) Heat treatment shall be in accordance with the material groupings and thickness ranges in Table 3 except as provided in paras 5.2.1 and 5.2.2.

(b) Heat treatment to be used after production welding shall be specified in the WPS and shall be used in qualifying the welding procedure.

(c) The engineering design shall specify the examination and/or other production quality control (not less than the requirements of this Standard) to ensure that the final welds are of adequate quality.

(d) Heat treatment for bending and forming shall be in accordance with para 6.4.

(e) Post -weld heat treatment of Cr.Mo. steels shall be carried out using either electric or gas fired furnaces. For local heat treatment heating by torches is not permitted. Electric heating shall be used.

5.1.2 Governing Thickness

This document is the property of Projects & Development India Limited(PDIL)and not to be copied or reproduced or shown to third parties without the written permission of PDIL.

This document is the property of Projects & Development India Limited(PDIL)and not to be copied or reproduced or shown to third parties without the written permission of PDIL.

When components are joined by welding, the thickness to be used in applying the heat treatment provisions of Table 5.1.1 shall be that of the thicker component measured at the joint except as follows :

(a) In the case of branch connections, metal (other than weld metal) added as reinforcement, whether an integral part of a branch fitting or attached as a reinforcing pad or saddle, shall not be considered in determining heat treatment requirements. Heat treatment is required, however, when the thickness through the weld in any plane through the branch is greater than twice the minimum material thickness requiring heat treatment, even though the thickness of the components at the joint is less than the minimum thickness. Thickness through the weld for the details shown in Fig.3.5.4D shall be computed using the following formulas :

sketch (1) = $T_b + t_c$

sketch (2) = $T_h + t_c$

sketch (3) = greater of $T_b + t_c$ or $T_r + t_c$

sketch (4) = $T_h + T_r + t_c$

sketch (5) = $T_b + t_c$

(b) In the case of fillet welds at slip-on and socket welding flanges and piping connections NPS 2$^{//}$ and smaller for seal welding of threaded joints in piping NPS 2$^{//}$ and smaller and for attachment of external nonpressure parts such as lugs or other pipe supporting elements in all pipe sizes, heat treament is required when the thickness through the weld in any plane is more than twice the minimum material thickness requiring heat treatment (even though the thickness of the components at the joint is less than that minimum thickness except as follows :

1) not required for P-No.1 materials when weld throat thickness is 16 mm or less regardless of base metal thickness;

2) not requisred for P-No.3,4,5 or 10A materials when weld throat thickness is 13 mm or less, regardless of base metal thickness, provided that not less than the recommended preheat is applied and the specified minimum tensile strength of the base metal is less than 490 Mpa (71 ksi);

3) not required for ferritic materials when welds are made with filler metal which does not air harden. Austenitic welding materials may be used for welds to ferritic materials when the effects of service conditions, such as differential thermal expansion due to elevated temperature or corrosion, will not adversely affect the weldment.

5.1.3 **Heating and Cooling**

The heating method shall provide the required metal temperature, metal temperature uniformity and temperature control and may include an enclosed furnace, local flame heating, electric resistance, electric induction or exothermic chemical reaction. The cooling method shall provide the required or desired cooling rate and may include cooling in a furnace, in air, by application of local heat or insulation or by other suitable means.

5.1.4 **Temperature Verification**

Heat treatment temperature shall be checked by thermocouple pyrometers or other suitable methods to ensure that the WPS requirements are met. See para 4.1.3(b) for attachment of thermocouples by the capacitor discharge method of welding.

5.1.5 **Hardness Tests**

Hardness tests of production welds and of hot bent and hot formed piping are intended to verify satisfactory heat treatment. The hardness limit applies to the weld and to the heat affected zone (HAZ) tested as close as practicable to the edge of the weld.

Hardness testing shall be carried out using a portable Brinnell hardness tester using a standard 10 mm ball.

(a) Where a hardness limit is specified in Table 3 at least 10% of welds, hot bends and hot formed components in each furnace heat treated batch and 100% of those locally heat treated shall be tested.

(b) When dissimilar metals are joined by welding, the hardness limits specified for the base and welding materials in Table 3 shall be met for each material.

It should be noted that hardness test is not a substitute for notch testing.

5.2 **Specific Requirements**

Where warranted by experience or knowledge of service conditions, alternative methods of heat treatment or exceptions to the basic heat treatment provisions of para 5.1 may be adopted as provided in paras 5.2.1 and 5.2.2.

5.2.1 **Alternative Heat Treatment**

Normalizing or normalizing and tempering or annealing may be applied in lieu of the required heat treatment after welding, bending or forming, provided that the mechanical properties of any affected weld and base metal meet specification requirements after such treatment and that the substitution is approved by the designer.

5.2.2 **Exceptions to Basic Requirements**

This document is the property of Projects & Development India Limited (PDIL) and not to be copied or reproduced or shown to third parties without the written permission of PDIL.

As indicated in para 5.0 the basic practices therein may require modification to suit service conditions in some cases. In such cases, the designer may specify more stringent requirements in the engineering design, including heat treatment and hardness limitations for lesser thickness or may specify less stringent heat treatment and hardness requirements, including none.

When provisions less stringent than those in para 5.0 are specified, the designer must demonstrate to the owner's satisfaction the adequacy of those provisions by comparable service experience considering service temperature and its effects, frequency and intensity of thermal cycling, flexibility stress levels, probability of brittle failure and other pertinent factors. In additon, appropriate tests shall be conducted, including WPS qualification tests.

5.2.3 **Dissimilar Materials**

(a) Heat treatment of welded joints between dissimilar ferritic metals or between ferritic metals using dissimilar ferritic filler metal shall be at the higher of the temperature ranges in Table 3 for the materials in the joint.

(b) Heat treatment of welded joints including both ferritic and austenitic components and filler metals shall be as required for the ferritic material or materials unless otherwise specified in the engineering design.

(c) Recommended welding material and recommended heat treatment procedures to be employed when welding various combinations are shown in Table-4A and Table-4B.

(d) It should be noted that a high alloy electrode is recommended in all cases where low alloy steel is welded to austenitic steel.

5.2.4 **Delayed Heat Treatment**

If a weldment is allowed to cool prior to heat treatment, the rate of cooling shall be controlled or other means shall be used to prevent detrimental effects in the piping.

5.2.5 **Partial Heat Treatment**

When an entire piping assembly to be heat treated cannot be fitted into the furnace, it is permissible to heat treat in more than one heat, provided there is at least 300 mm overlap between successive heats and that parts of the assembly outside the furnace are protected from harmful temperature gradients.

5.2.6 **Local Heat Treatment**

When heat treatment is applied locally, a circumferential band of the run pipe and of the branch where applicable, shall be heated until the specified temperature range exists over the entire pipe section(s), gradually diminishing beyond a band which includes the weldment or the bent or formed section and at least 25 mm beyond the ends thereof.

This document is the property of Projects & Development India Limited(PDIL)and not to be copied or reproduced or shown to third parties without the written permission of PDIL.

6.0 BENDING AND FORMING

6.1 General

Pipe may be bent and components may be formed by any hot or cold method which is suitable for the material the fluid service and the severity of the bending or forming process. The finished surface shall be free of cracks and substantially free from buckling. Thickness after bending or forming shall be not less than that required by the design.

6.2 Bending

6.2.1 Bending Flattening

Flatening of a bend, the difference between maximum and minimum diameters at any cross section, shall not exceed 8% of nominal outside diameter for internal pressure and 3% for external pressure. Removal of metal shall not be used to achieve these requirements.

6.2.2 Bending Temperature

(a) Cold bending of ferritic materials shall be done at a temperature below the transformation range.

(b) Hot bending shall be done at a temperature above the transformation range and in any case within a temperature range consistent with the material and the intended service.

6.3 Forming

The temperature range for forming shall be consistent with material, intended service and specified heat treatment.

6.4 Required Heat Treatment

Heat treatment shall be performed in accordance with para 6.1.1 when required by the following :

6.4.1 Hot Bending and Forming

After hot bending and forming, heat treatment is required for P-Nos.3,4,5,6 and 10A materials in all thicknesses. Durations and temperatures shall be in accordance with para 5.0.

6.4.2 Cold Bending and Forming

After cold bending and forming, heat treatment is required (for all thicknesses and with temperature and duration as given in Table 5.1.1) when any of the following conditions exist :

This document is the property of Projects & Development India Limited(PDIL)and not to be copied or reproduced or shown to third parties without the written permission of PDIL.

(a) for P-Nos. 1 through 6 materials, where the maximum calculated fiber elongation after bending or forming exceeds 50% of specified basic minimum elongation (in the direction of severest forming) for the applicable specification, grade and thickness. This requirement may be waived if it can be demonstrated that the selection of pipe and the choice of bending or forming process provide assurance that in the finished condition the most severely strained material retains at least 10% elongation.

(b) for any material requiring impact testing, where the maximum calculated fiber elongation after bending or forming will exceed 5%.

(c) when specified in the engineering design.

7.0 ASSEMBLY AND ERECTION

7.1 General

7.1.1 Alignment

(a) **Piping Distortions**

Any distortion of piping to bring it into alignment for joint assembly which introduces a detrimental strain in equipment or piping components is prohibited.

(b) **Cold Spring**

Before assembling any joints to be cold sprung, guides, supports and anchors shall be examined for errors which migh interfere with desired movement or lead to undesired movement. The gap or overlap of piping prior to assembly shall be checked against the drawisng and corrected if necessary. Heating shall not be used to help in closing the gap because it defeats the purpose of cold springing.

(c) **Flanged Joints**

Before bolting up, flange faces shall be aligned to the design plane within 1 mm in 200 mm measured across any diameter; flange bolt holes shall be aligned within 3 mm maximum offset.

7.2 Flanged Joints

7.2.1 Preparation for Assembly

Any damage to ghe gasket seating surface which would prevent gasket seating shall be repaired or the flange shall be replaced.

7.2.2 Boltling Torque

(a) In assembling flanged joints, the gasket shall be uniformly compressed to the proper design loading.

This document is the property of Projects & Development India Limited(PDIL)and not to be copied or reproduced or shown to third parties without the written permission of PDIL.

(b) Special care shall be used in assembling flanged joints in which the flanges have widely differing mechanical properties. Tightening to a pedetermined torque is recommended.

7.2.3 **Bolt Length**

Bolts should extend completely through their nuts. Any which fail to do so are considered acceptably engaged if the lack of complete engagement is not more than one thread.

7.2.4 **Gaskets**

No more than one gasket shall be used between contact faces in assembling a flanged joint.

7.3 **Threaded Joints**

7.3.1 Thread Compound or Lubricant

Any compound or lubricant used on threads shall be suitable for the service conditions and shall not react unfavourably with either the service fluid or the piping material.

7.3.2 **Joints for Seal Welding**

A threaded joint to be seal welded shall be made up without thread compound. A joint containing thread compound which leaks during leak testing may be seal welded in accordance with para 3.5.3, provided all compound is removed from exposed threads.

7.3.3 **Straight Threaded Joints**

Typical joints using straight threads, with sealing at a surface other than the threads, are shown in Fig.7.3.3 sketches (a), (b) and (c). Care shall be taken to avoid distorting the seat when incorporating such joints into piping assemblies by welding.

7.4 **Tubing Joints**

7.4.1 **Flared Tubing Joints**

The sealing surface of the flare shall be examined for imperfections before assembly and any flare having imperfections shall be rejected.

7.4.2 **Flareless and Compression Tubing Joints**

Where the manufacturer's instructions call for a specified number of turns of the nut, these shall be counted from the point at which the nut becomes finger tight.

7.5 **Caulked Joints**

This document is the property of Projects & Development India Limited (PDIL) and not to be copied or reproduced or shown to third parties without the written permission of PDIL.

Caulked joints shall be installed and assembled in accordance with the manufacturer's instructions, as modified by the engineering design. Care shall be taken to ensure adequate engagement of joint members.

7.6 Expanded Joints and Special Joints

7.6.1 General

Expanded joints and special joints shall be installed and assembled in accordance with the manufacturer's instructions, as modified by the engineering design. Care shall be taken to ensure adequate engagement of joint members.

7.6.2 Packed Joints

Where a packed joint is used to absorb thermal expansion, proper clearance shall be provided at the bottom of the socket to permit this movement.

7.7 Cleaning of Piping

Following are some general considerations which may be evaluated in determining the need for cleaning of piping :

(a) Requirements of the service, including possible contaminants and corrosion products during fabrication, assembly, storage, erection and testing.

(b) For low temperature service, removal of moisture, oil, grease and other contaminants to prevent sticking of valves or blockage of piping and small cavities; and

(c) For strong oxidizer fluid service (e.g. oxygen or fluorine), special cleaning and inspection. Reference may be made to the Compressed Gas Association's Pamphlet G-4.1 Cleaning Equipment for Oxygen Service.

This document is the property of Projects & Development India Limited(PDIL)and not to be copied or reproduced or shown to third parties without the written permission of PDIL.

This document is the property of Projects & Development India Limited(PDIL) and not to be copied or reproduced or exhibited to third parties without the written permission of PDIL

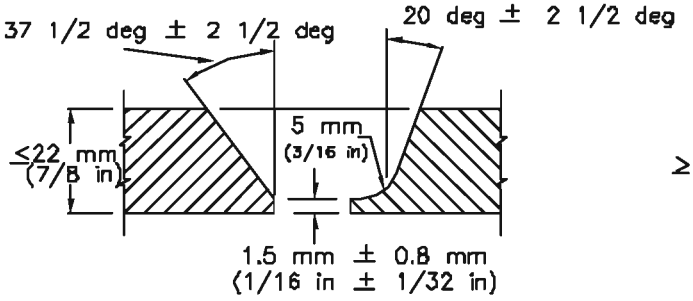

(a) Wall Thickness 6 mm to 22 mm , inclusive (3/16 in. to 7/8 in.)

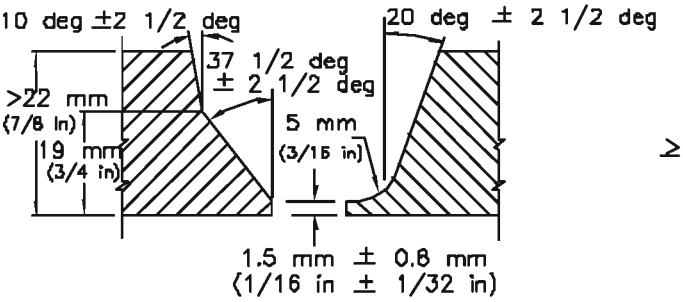

(b) Wall Thickness over 22 mm (7/8 in.)

FIG. 3.4.2 TYPICAL BUTT WELD END PREPARATION

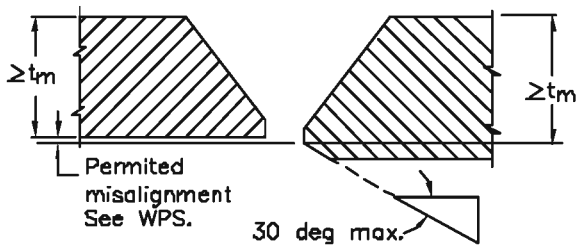

(a) Thicker Pipe Taper–Bored to Align

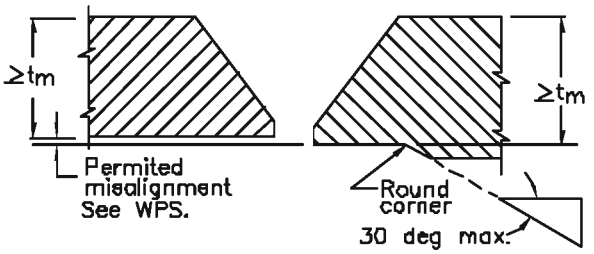

(b) Thicker Pipe Bored for Alignment

FIG. 3.4.3 TRIMMING AND PERMITTED MISALIGNMENT

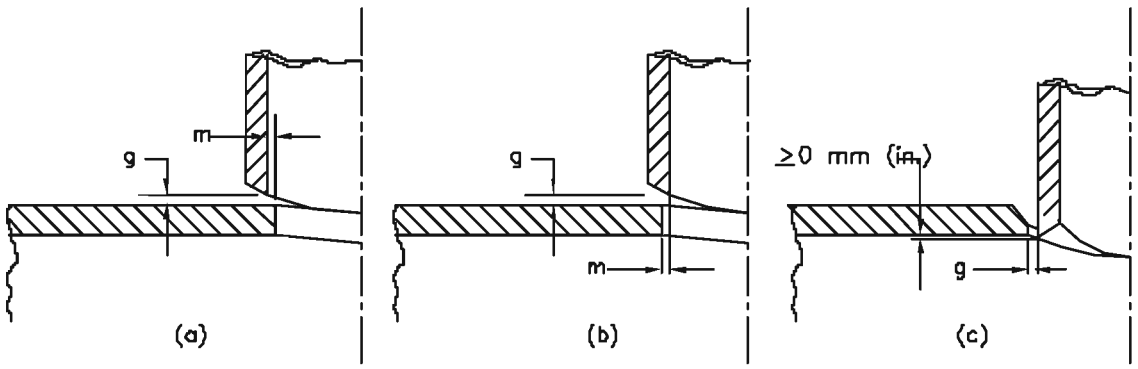

g = root gap per welding specification
m = the lesser of 3.2 mm (1/8 in.)or 0.5 T_b

FIG. 3.4.4 PREPARATION FOR BRANCH CONNECTIONS

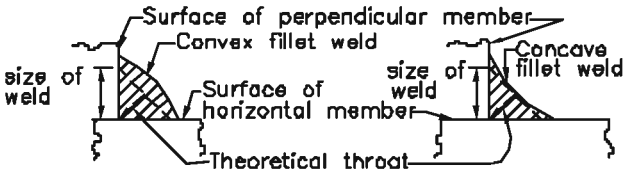

Equal Leg Fillet Weld

GENERAL NOTE:The size of an equal leg fillet weld is the leg length of the largest inscribed isosceles right triangle(theoretical throat=0.707 x size).

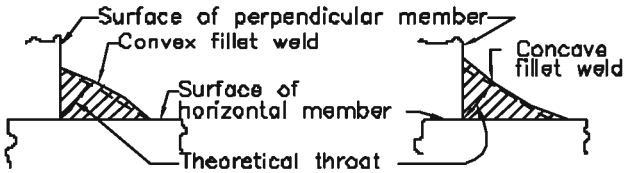

Unequal Leg Fillet Weld

GENERAL NOTE:The size of unequal leg fillet weld is the leg lengths of the largest right triangle which can be inscribed within the weld cross section,e.g.,13mm x 19mm(1/2in.x3/4in.)

FIG. 3.5.2A FILLET WELD SIZE

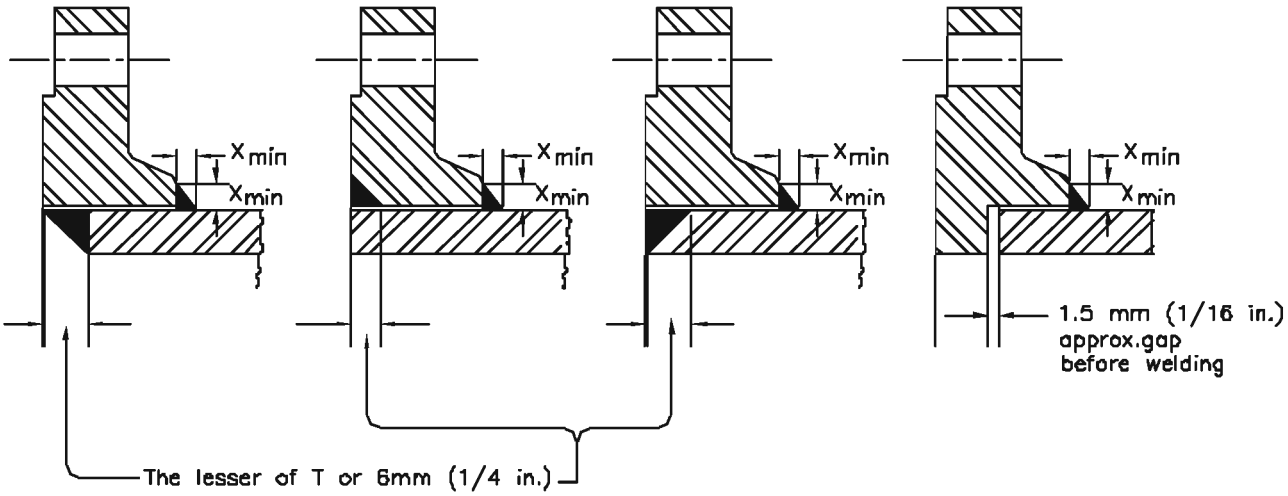

(1) Front and back welds (2) Face and back welds (3) Socket Welding Flanges

X_{min} = the lesser of $1.4\bar{T}$ or the thickness of the hub

FIG. 3.5.2B TYPICAL DETAILS FOR DOUBLE-WELDED SLIP-ON AND SOCKET WELDING FLANGE ATTACHMENT WELDS

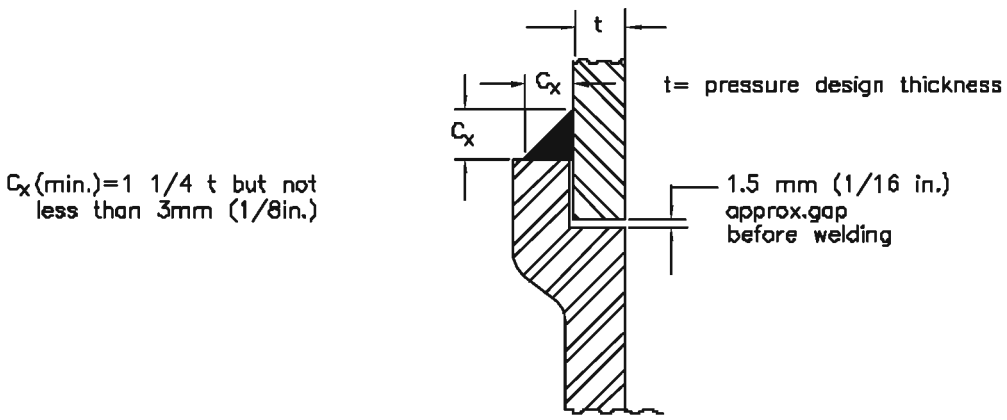

FIG. 3.5.2C MINIMUM WELDING DIMENSIONS FOR SOCKET WELDING COMPONENTS OTHER THAN FLANGES

	ISSUED FOR IMPLEMENTATION	ENGG. COMM.		
DATE	PURPOSE	PREPARED	REVIEWED	APPROVED

FILE NAME :ES6004B

This document is the property of Projects & Development India Limited(PDIL) and not to be copied or reproduced or exhibited to third parties without the written permission of PDIL

This document is the property of Projects & Development India Limited(PDIL) and not to be copied or reproduced or exhibited to third parties without the written permission of PDIL

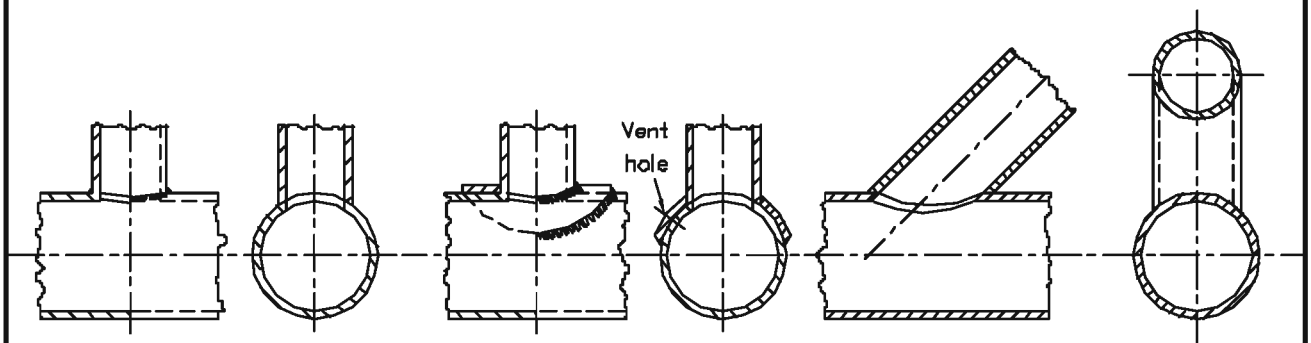

(a) Without Added Reinforcement (b) With Added Reinforcement (c) Angular Branch Without Added Reinforcement

FIG. 3.5.4A,B,C. TYPICAL WELDED BRANCH CONNETIONS

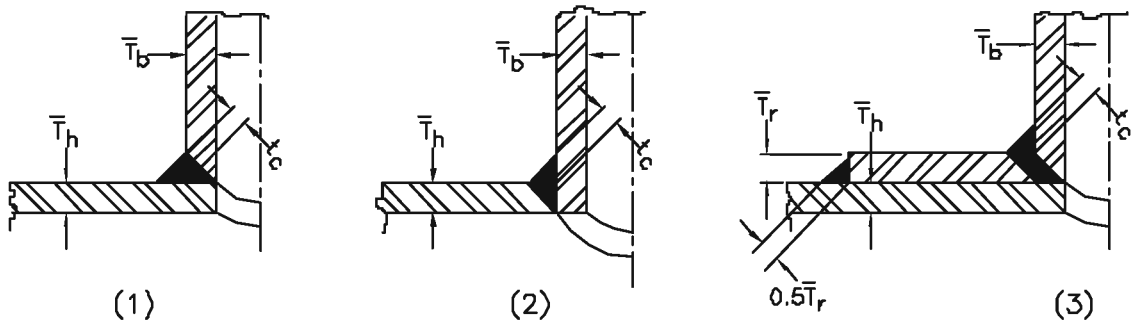

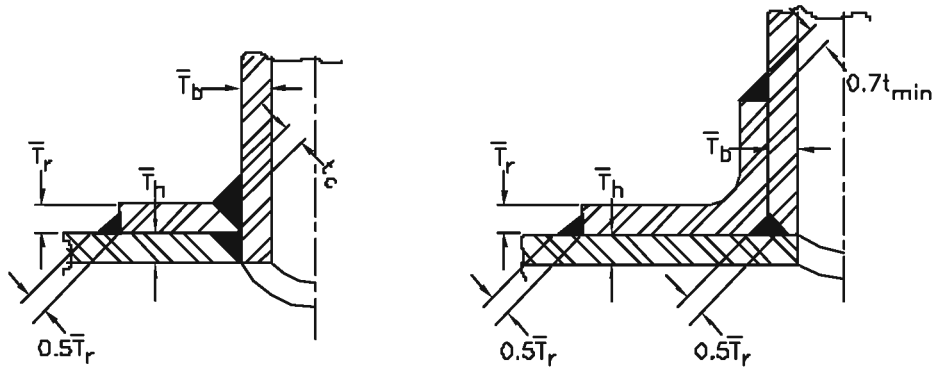

GENERAL NOTE:These sketches show minimum acceptable welds. Welds may be larger than those shown here.

FIG. 3.5.4D ACCEPTABLE DETAILS FOR BRANCH ATTACHMENT WELDS

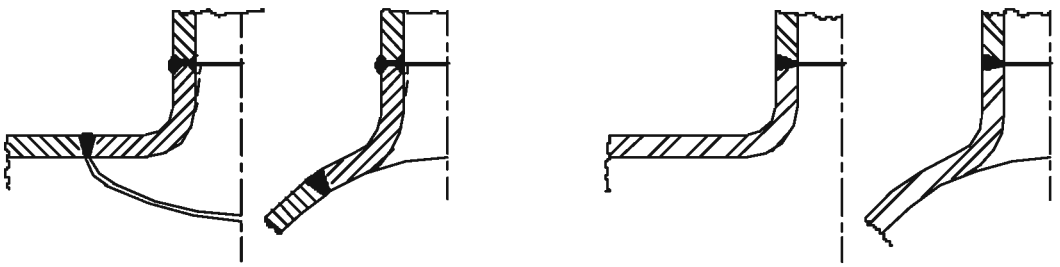

(1) Contour Outlet Fitting (2) Extruded Header Outlet

FIG. 3.5.4E ACCEPTABLE DETAILS FOR BRANCH ATTACHMENT SUITABLE FOR 100% RADIOGRAPHY

	ISSUED FOR IMPLEMENTATION	ENGG. COMM.		
DATE	PURPOSE	PREPARED	REVIEWED	APPROVED

This document is the property of Projects & Development India Limited(PDIL) and not to be copied or reproduced or exhibited to third parties without the written permission of PDIL

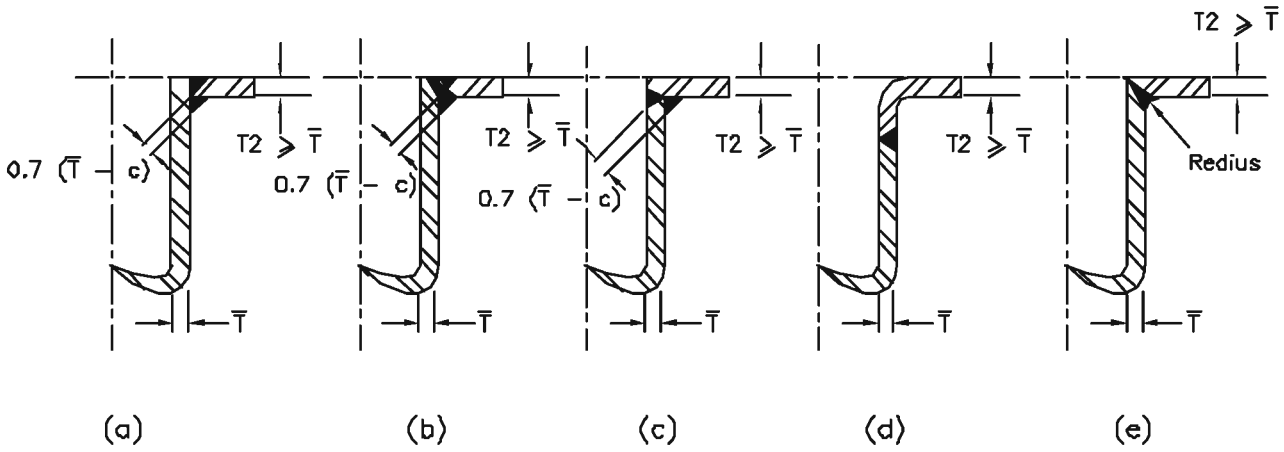

GENERAL NOTE:Laps shall be machined (front and back)or trued after welding. Plate flanges per para. 304.5 or lap joint flanges per ASME B16.5 may be used.Welds may be machined to redius,as in sketch (e),if necessary to match ASME B16.5 lap joint flanges.

FIG. 3.5.5 TYPICAL FABRICATED LAPS

ENGINEERING STANDARD

UNDERGROUND PIPING

0	JAN. 1998	FOR IMPLEMENTATION AND COMMENTS IF ANY			
REV.	DATE	PURPOSE	PREPD	REVWD	APPD

All rights reserved

1.0 **SCOPE**

1.1 This specification covers the requirements for construction and installation of underground Carbon Steel burried piping.

2.0 **REFERENCE STANDARDS**

PDS-P-001	Tolerance for piping fabrication.
ES 6004	Welding specifications CS & Alloy Steel Piping.
ES 6006	Pressure Testing of pipes.
ES 6009	Protective coating for underground piping.
ES 6021	Fusion welds of pressure pipes – Inspection requirement

3.0 **PROTECTIVE COATING**

3.1 Protective coating of pipes shall be in accordance with ES 6009.

3.2 Wherever specified, cathodic protection as per the specification/procedure specified in NIT shall also be provided.

4.0 **STORAGE AND HANDLING**

4.1 **Storage**

4.1.1 Pipes shall be stored on firm and well drained ground.

4.1.2 The pipes shall be stacked/stored on timber/packs of sand bags/steel to keep them out of contact with ground.

4.1.3 Pipe fittings and valves upto size 6$^{//}$ shall be stored indoors.

4.1.4 Pipe fittings and valves above size 6$^{//}$ may be stored outside on wooden sleepers on firm and well drained ground. Fittings shall be stacked such that ingress of rain water is avoided and are in self draining position.

4.1.5 The valves shall be stored in closed position except those with non metallic seats (for instance butterfly valves).

4.1.6 Gate valves shall be stored in upright position while butterfly valves shall be kept with flange facing resting on wooden sleepers. All valves shall be covered with tarpulin/polythene sheets.

4.1.7 Rubber-lined valves shall be stored in shade and protected from exposure to direct sunlight.

All rights reserved

4.1.8 Valves end coverings shall be retained in place until removal is necessitated for erection. All the valves shall be inspected and cleaned after end coverings are removed for erection.

4.1.9 Valves spindle shall be cleaned and lubricated prior to commissioning.

4.1.10 Valves shall be lifted by slinging around the body or lifting lugs provided on the body. Valves shall not be handled from hand wheels/actuators and also shall not be dragged.

4.2 **Handling**

4.2.1 Pipes/pipe fittings and valves shall not be allowed to drop or strike any objects which shall damage the same.

4.2.2 While handling pipes and fittings, care shall be exercised to avoid distortion, flattening, denting, scoring or any other form of damage.

4.2.3 To the extent feasible, mechanical lifting tools and tackles shall be used for handling pipes to avoid any scoring/scratching.

4.2.4 After application of protective coating, no bracelinks/ropes of any description shall be used for lifting or handling of pipes. After application of protective coating, for handling the pipes, lifting hooks made of belt length or plates curved to match the curvature of pipes or any similar device providing enough bearing area to avoid damage to the protective coating shall be used. After application of protective coating, pipes shall be lifted and lowered by use of cranes except for areas which are unaccessible for cranes.

4.2.5 Dragging of coated or uncoated pipes is prohibited.

4.2.6 In stringing pipe along the right of way, gaps shall be left between adjacent length of pipes at regular intervals and at well defined places to permit free passage of personnel or vehicle during the time interval between stringing and other construction operations.

5.0 SPECIFICATION AND CONSTRUCTION OF TRENCHES

5.1 Layout of the trenches including slope shall conform to piping layout drawings.

5.2 The cross section of trenches shall conform to Fig.1. The depth of the trench at certain locations may have to be increased in consultation with PDIL.

All rights reserved

5.3 Excavation shall be carried out with conventional tools and machinery. The excavation in rocky areas shall be carried out by controlled blasitng and/or use of drilling, rock ploughs, rippers etc.

5.4 Adequate and abundant caution shall be exercised prior to and during the blasting to prevent any damage to the property or injury to personnel. All rock scattered due to blasting shall be removed to the satisfaction of PDIL.

5.5 Soil removed during excavation shall be properly stacked and shall be used for back filling, if it meets the requirements laid down in this standard for back filling material.

5.6 Finished trench shall be free of rocks, hard clods, roots and/or other debris which would damage the coating, when the pipe is lowered into the trench.

5.7 After excavation, bed depth of 75 mm below the bottom of the pipe as shown in Fig.1 shall be ensured.

5.8 While constructing the trench at rail/road crossing, danger signals shall be provided on both sides of rail/road in accordance with Railway/State regulations. Signals shall be located a minimum of 100 meters from pipe line crossing and shall be readable from 30 meters. Barricades or guard rails may also be provided for protection of general public due to the hazardous location of the crossing.

5.9 Clearance between the pipe and any other underground structure shall be provided as indicated below, clearance between two adjacent pipes shall also be as indicated below and decided considering the higher size pipe.

Pipe size	Upto 12″	14″ to 24″	28″
Clearance (mm)	150	200	300

5.10 Where drain is encountered, the trench shall be dug so that the pipe line may be laid over or under such drain with a minimum clearance of 100 mm and to such depths as may be required due to site conditions. When any drain is damaged, it shall be repaired immediately (See Fig.6).

All rights reserved

5.11 The pipe line may pass through deep washes and creeks where supports shall be provided in consultation with PDIL. The controlling factors will be length of span, conditions of banks and hazards of leaving the line exposed. Maximum unsupported span for various sizes are shown in Table-1. It shall be checked that the combined stress due to internal pressure and external loads are within permissible limits.

TABLE - 1

Pipe Size in inches	Span in Metre	Pipe Size in inches	Span in Metre
6	15	16	21
8	16	18	24
10	18	20	24
12	19	22	25
14	19	24	25

5.12 Where spans are greater length than those indicated in Table-1, intermediate supports shall be provided. However, in no case the unsupported length of pipe shall be more than that indicated in Table-1.

5.13 The crossings at railway tracks and roads shall be in accordance with the requirements of Railways or local Governament authorities. Pipe casing or other suitable arrangement like culverts etc. shall be provided at crossing of roads, railway tracks, canals etc. as indicated in the drawings.

5.14 In all cases where trench has been cut across public or private roads and back filling of the trench is not completed, temporary bridge work of full width of road and of adequate strength shall be installed to ensure safety of traffic.

5.15 Crossing/diversion shall be provided wherever necessary in the opinion of PDIL to permit property owner to travel or move his stock and property.

5.16 The dimensions of the trench may have to be locally increased to facilitate welding of pipe. Field joints should be kept to a minimum.

All rights reserved

6.0 **DEWATERING**

6.1 Adequate arrangement for dewatering of trenches shall be made by the contractor. The water thus pumped/bailed out shall be drained to a safe location as directed by PDIL.

6.2 The trenches shall be made free of water while preparing the bed, laying of pipes, backfilling and welding of field joints.

6.3 From safety point of view, diesel driven pumps shall be preferred.

7.0 **LAYING OF PIPE**

7.1 Laying of pipes in the trench shall be started only after the layout, depth and slope of the trench have been approved by PDIL.

7.2 Pipes shall be visually examined to ensure that the internal surface of the

pipe is clean. No earth or rock shall remain inside the pipe. The weld preparation and adjacent pipe shall be free from dust, scale, paint and foreign material for a distance of 2T + 50 mm where T is the thickness of the pipe.

7.3 The pipes shall be visually examined for any damage to the protective coating. In case any damage is observed the same shall be further examined by spark testing to establish the extent of damage. The damaged area shall be repaired to the satisfaction of PDIL.

7.4 The open ends of sections of laid pipe shall be covered with minimum 3 mm thk. steel plates to prevent the ingress of water, skids, animals or other material which would interfere with the final cleaning of the pipe.

The covers shall be securely attached to the pipe and shall not be removed until the pipes are to be joined by welding.

7.5 All rules and regulations laid down by railway and or other related Government authorities shall be complied with while laying the pipe through rail/road crossing.

7.6 Concrete anchor blocks shall be provided at all turning points for pipe sizes $8^{//}$ and above to absorb water hammer and pipe vibrations.

7.7 Anchor blocks at suitable interval should be provided to take care of buonacy force coming on the pipe when the pipe is passing on the river bed or through water.

All rights reserved

8.0 **INSTALLATION OF CASINGS PIPE**

The material of casing pipes shall be Carbon Steel.

8.1 The thickness of casing pipe shall be calculated in accordance with

Annexure-I of this standard or as indicated in the drawing/work order.

8.2 The interior surface of the casing pipe must be free of rocks, dirts, clods or other material which could damage the coating on the carrier pipe.

8.3 Casing shall be installed in accordance with figures 2 & 3 and shall meet the requirements of Railway and local Government authorities.

8.4 Casing to be installed by boring. The boring shall be done with a machine which will feed the casing into the bored hole directly following the cutter head on the auger simultaneously with the boring operation. The diameter of the cutter head on the auger shall not be more than 20 mm larger than the outside diameter of the casing. The trench excavated for boring operation shall be at least 3000 mm away from the edge of road/rail track.

8.5 Casing ,may also be installed across highways or roads by trenching. However, when this method is used, the trench across the road shall be back-filled immediately after the casing is in place. The back fill shall be thoroughly compacted across the entire road bed. The top 300 mm of the back fill shall be gravel or crushed rock.

8.6 Casing shall have minimum clearance of 300 mm from other underground structures.

8.7 As soon as the casing is in place, the vent pipes shall be installed, the inside of the casing cleaned out and both ends capped.

The area shall be cleaned up before moving away from the work site.

9.0 **WELDING**

9.1 Welders to be deployed for welding shall be tested for procedure and qualification in presence of PDIL at site strictly as per ASME Sec.IX.

9.2 Welding shall be in accordance with ES6004.

9.3 Alignment and welding set up of pipe joints shall be as per ASME B 31.3 and shall be inspected by PDIL before starting the welding.

9.4 Inspection and inspection requirements for welding shall be as per ES6021.

All rights reserved

10.0 **CLEANING AND FLUSHING**

10.1 The pipe line shall be, section by section, thoroughly cleaned by manual means/compressed air/mechanical means such as pigging/water as may be permitted.

10.2 Normally the complete system/installation shall be flushed/cleaned with the system fluid after the system Pumps/Compressors are taken on line. However, the suitability of the system fluid for flushing shall have PDIL approval.

10.3 Adequate and suitable arrangements for disposal of the flushing fluid shall be made before starting the flushing.

10.4 During flushing/cleaning of the piping system with system pumps/compressors on line, the complete installations shall be examined for possible leaks.

11.0 **HYDRAULIC TESTING**

11.1 The procedure for Hydraulic testing shall be in accordance with ES:6006 except that the specified test pressure shall be maintained on the line for a period of one hour or time taken for inspection whichever is more and no drop in pressure should occur. It is pressumed that all field joints are exposed for visual inspection during hydraulic test.

11.2 The spool pieces before application of protective coating shall be subjected to hydraulic test.

11.3 In case, due to site conditions, Hydraulic testing of the complete system is not feasible, the field joints in trenches shall be 100% radiographed.

12.0 **BACK FILLING & CLEAN UP**

12.1 Back filling of the trench shall be started after inspection and approval of PDIL.

12.2 Before pipe is laid in the trench, sub-grade shall be made by back filling with approved material for a depth of 75 mm from the bottom of the pipe and compaced by ramming/tamping.

All rights reserved

12.3 All trenches shall be back-filled by hand from bottom of the trench upto 300 mm above the top of the pipe with back-fill material free from cinder, ashes, refuse, vegetable or organic material, boulders, rocks, stones or other such material which may damage the protective coating of the pipe. The back filling shall be carried out in layers of 75 mm and thoroughly compacted by tamping. Back-fill material shall be deposited in the trench for its full width. The back fill material may be excavated earth, river sand, fine stone dust, sandy soil, etc. In case, adequate quantity of excavated earth is not available, back-fill material shall be hauled from other places by the contractor.

12.4 From 300 mm above the top of the pipe and upto grade level, material containing boulders upto 80 mm in their largest dimension may be used. The back-fill material may be filled by hand or by other approved mechanical methods and shall be thoroughly compacted.

12.5 While back-filling and compacting, care shall be taken to avoid any injury to the pipe and the protective coating.

12.6 Wherever excavated earth is used for back-filling, the degree of compactness shall not be less than 90% protector density as per IS 2720 Part 7 and Part 8.

12.7 The back-fill above the grade level shall be completed as indicated in Fig.4 & 5 as applicable.

12.8 Settlement of back-fill in the trench shall be achieved by means of flooding, puddling, tamping or jetting. Poking with metal rod is not permitted.

12.9 During and/or after completion of back-filling, the excess excavated material shall be carted away as per direction of PDIL. The area shall also be dressed and cleaned. All debris, erection waste etc. shall also be removed by the Contractor.

13.0 MISCELLANEOUS

13.1 The pipes and its branches emerging above the ground level shall be blanked with M.S. blanks fillet welded to them. These blanks shall be removed only at the time of connecting these lines to above ground piping.

13.2 The elevation of projected portion shall be as per piping drawing and shall be kept free from any protective coating for a distance of 150 mm from top elevation.

All rights reserved

14.0 In case of cooling water lines, if it is difficult to drain out the water and dry out the line completely, the test water shall be allowed to remain in the header after adding the inhibitor like hexametaphosphate.

15.0 Valve pits shall be constructed as per drawing and construction shall be such as to prevent ingress of sub-soil water.

16.0 **DEVIATIONS**

16.1 Record of deviation/alteration from the construction drawings shall be recorded by the Contractor.

16.2 After the completion of the work, as built drawisngs shall be made by the Contractor and submitted to PDIL incorporating all the deviations/alterations.

17.0 **MEASUREMENTS**

17.1 **Trench Earth Work**

For the purpose of measurement

a) Cross section of the trench shall be considered as per Fig.1.

b) Length of the trench shall be on the basis of dimensions given in piping layout drawing including the valve face to face distance.

17.2 **Piping System**

a) The piping measurement shall be computed from the piping layout drawings and actual measurements taken for deviation/modifications made during execution.

b) In case the erection of valves and specified special components is being measured separately, the erection dimensions of such items shall be excluded while computing the erected piping measurement.

c) The measurements shall be along centre line of piping system from end to end and shall include all fittings like flanges, bends, elbows, tees, reducers, instrument tappings etc., but shall exclude such items as per para 17.2 (b).

d) For branch connections the measurement shall be from the root of the branch.

All rights reserved

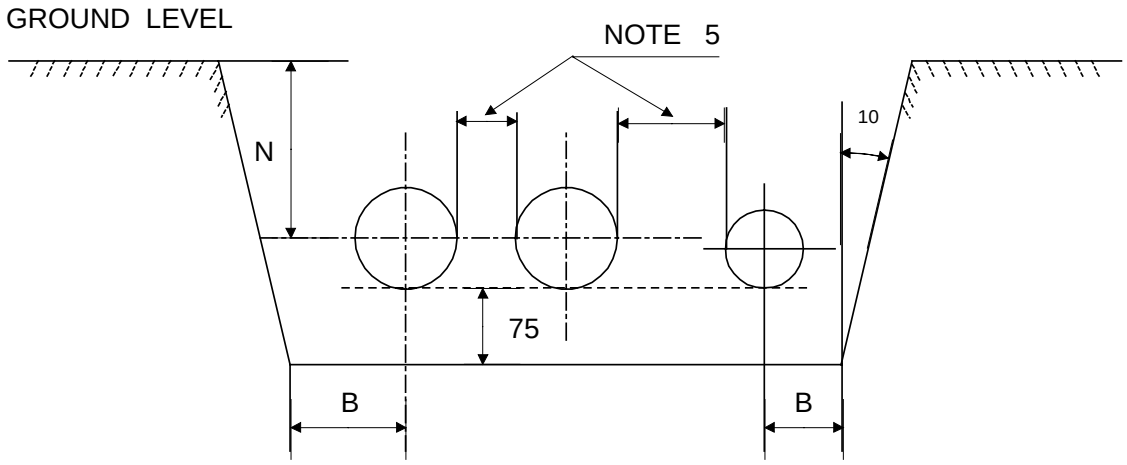

FIG. 1

PIPE SIZE IN INCHES	N (MIN.)		B	
	N1	N2	NORMAL EXCAVATION	ROCK EXCAVATION
3	700	1100	225	300
4	700	1100	225	300
6	700	1100	275	300
8	800	1200	300	300
10	800	1200	325	325
12	800	1200	350	350
14	800	1200	375	375
16	900	1300	375	375
18	900	1300	400	400
20	900	1300	425	425
24	1000	1400	450	450
60	1000	1400	500	500
32	1100	1500	550	550
36	1100	1500	600	600
40	1200	1600	675	675
44	1200	1600	750	750
48	1300	1700	800	800
56	1400	1800	900	900
64	1500	1900	1000	1000
72	1600	2000	1100	1100
80	1700	2100	1200	1200

NOTE :

All rights reserved

1. N1 Apples for plant piping.
2. N2 Apples for cross country piping.
3. The dimension ‘B’ shall correspond to the diameter of end pipe.
4. The dimension ‘N’ shall correspond to largest diameter pipe.
5. Distance between two pipes shall be as per Cl. 5.9.

All rights reserved

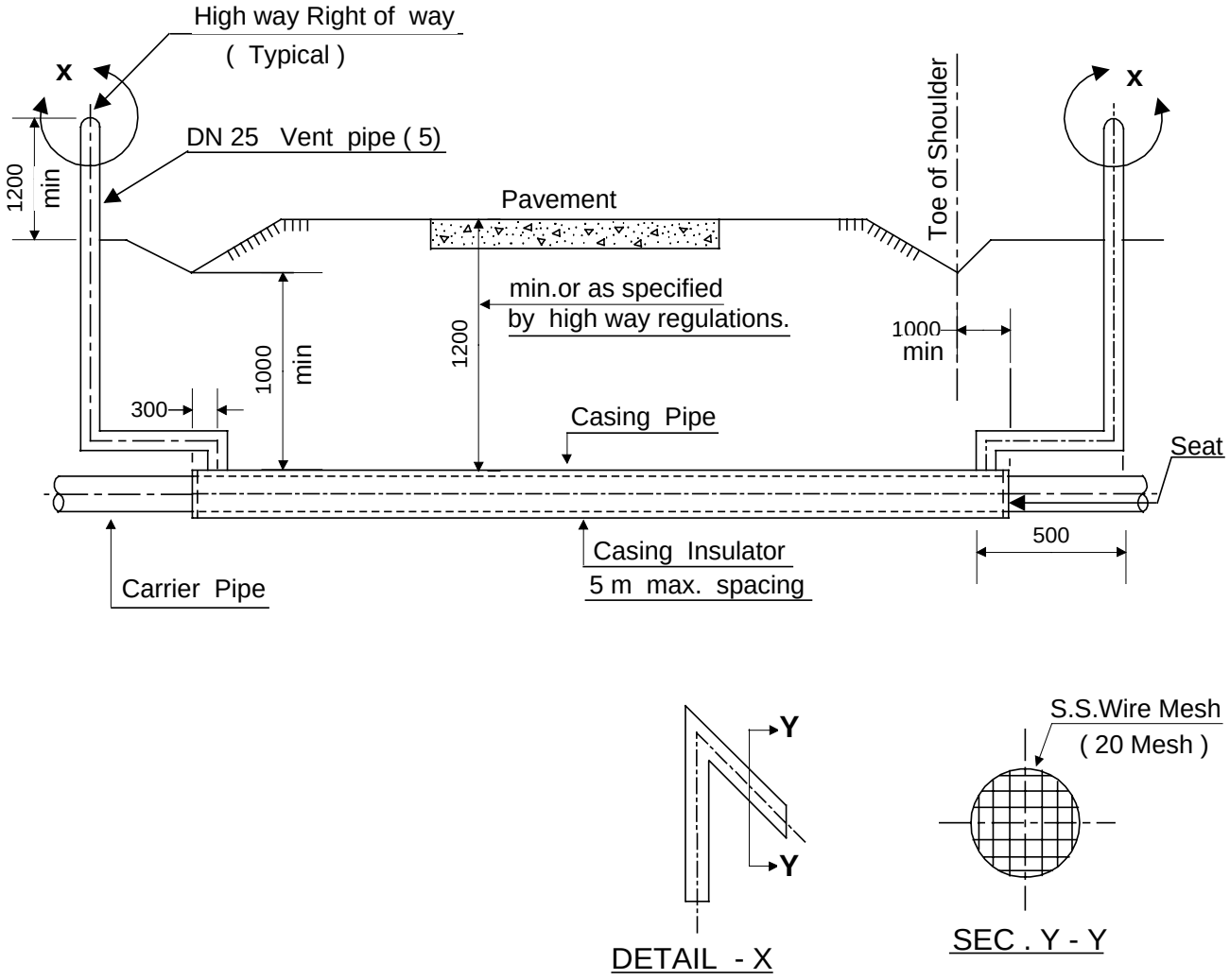

FIG. 2 H IGH WAY / ROAD CROSSINGS

NOTES :

1. Casiing pipe shall be sealed at both ends.
2. In refilling the trench excavated for the pipe line, adjacent to road and across roads where trenching is permitted, the trench shall be promptly back filled in a proper and workman like manner.

All rights reserved

3. Casing pipe shall be 100 mm bigger than the carrier pipe.
4. All dimensions are subject to individual state high way specification.
5. Vent pipes shall be provided only in case of gases and volatile liquids such as Ammonia, Naphtha etc.

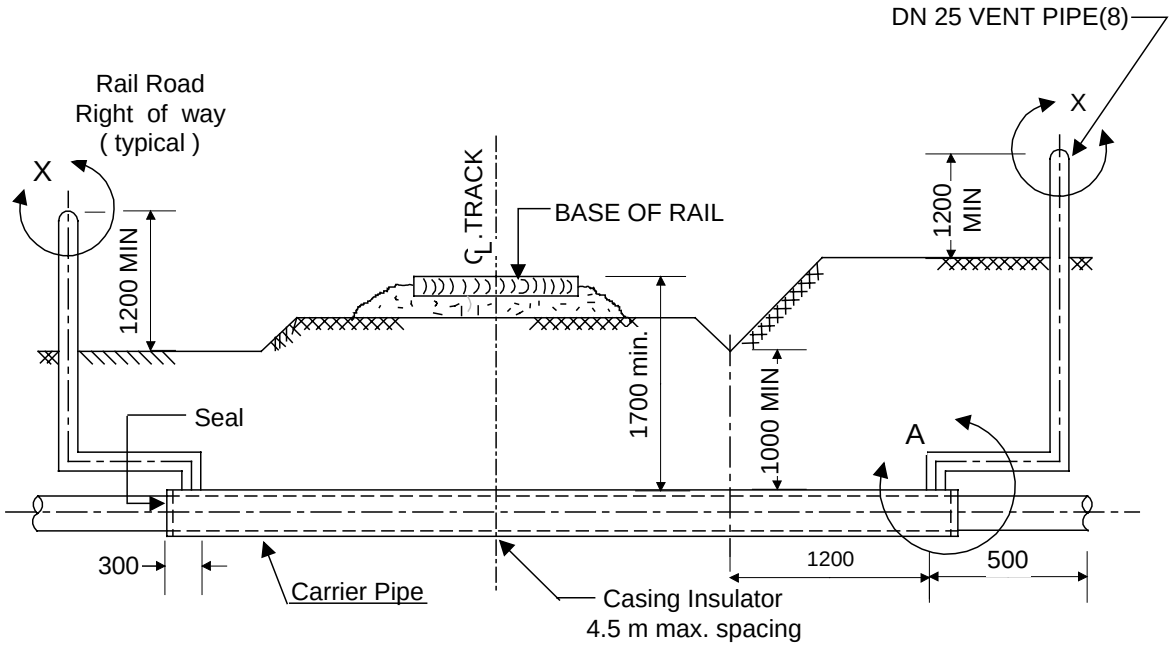

FIG. 3. RAIL ROAD CROSSINGS

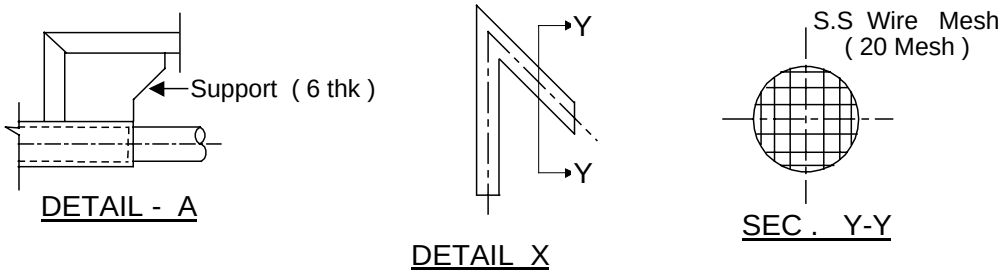

NOTES :

1. Casing pipe shall be sealed at both ends.
2. Pipe line shall not be laid under rail road tracks nearer than 2 m from any rail joint.

All rights reserved

3. The trench on each side of the track shall be promptly refilled in a proper and workman like manner.
4. No pipe shall be placed on, under or within 16 m of any bridge culvert or structure.
5. Casing pipe shall be 100 mm bigger than carrier pipe.
6. Where in the opinion of the railway authorities, drainage ditches or other conditions require the pipe and casing to be burried to a greater depth, pipe shall be so installed.
7. In all case the specifications of Indian Railways shall govern.
8. Vent pipes shall be provided only in case of gases and volatile liquids such as Ammonia, Naphtha etc.

All rights reserved

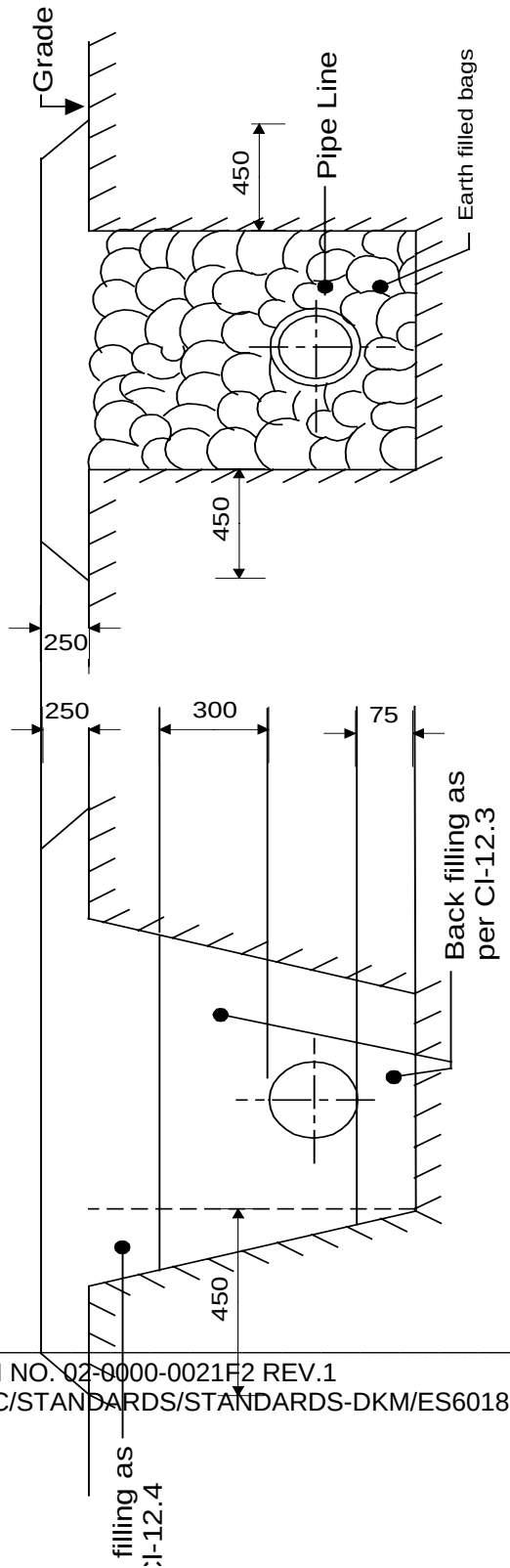

FIG. 4 BACK FILL

FIG. 5 BACK FILL ON SLOPING GRO

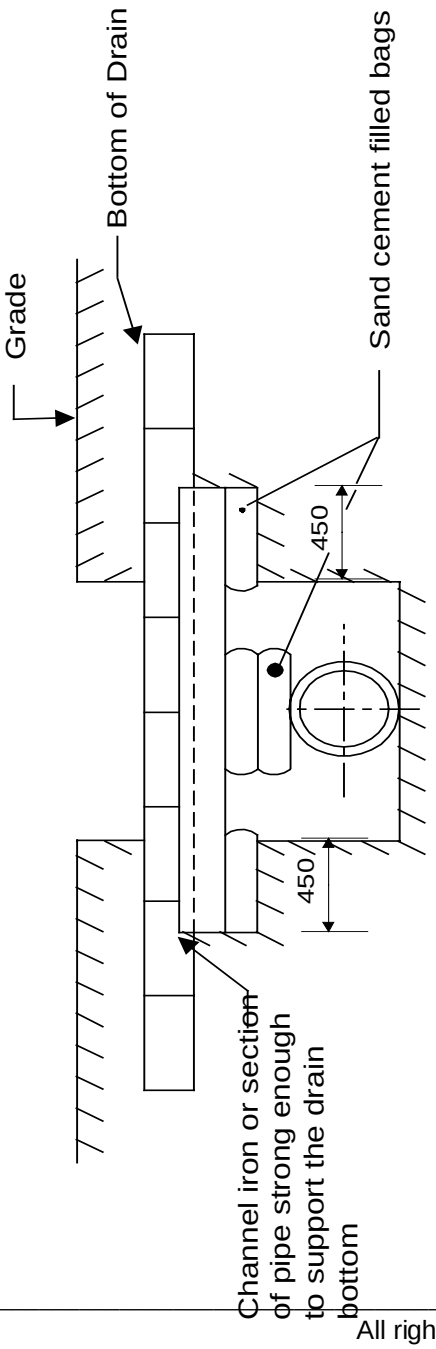

FIG. 6 DRAIN REPAIR

All rights reserved

ANNEXURE-1

Strength Calculation of underground Metallic Pipes

1.0 Following steps specifies the procedure for checking the strength of underground steel pipes and underground steel casing pipes (i.e. Burried Pipes).

2.0 Loads over Burried Pipes

3.0 Live load (W_L) in Kg/cm^2 shall be obtained as indicated below:

Height of cover (m)	--	0.3	0.6	1.2	1.8	2.4	3.0
Load of truck	--	0.8	0.5	0.23	0.15	0.08	0.08
Load of locomotives	--	2.6	2.0	1.5	1.3	1.0	0.7

4.0 Dead load (W_d) or Back fill load in Kg/cm^2 is obtained by

$W_d = HP \times 10^{-4}$ where H = Height of cover (m)

P = Density of soil (Kg/m^3)

5.0 Total load in Kg/cm^2 is obtained by

Wtd (for deflection consideration) = ½ W1 + Wd

Wts (for strength consideration) = W1 + Wd

(Note : Traffic loads or transient loads have less effect in deflecting a flexible pipe than do permanent soil load, hence when considering deflection only a reduction factor of ½ is applied on W1).

6.0 Percentage deflection in vertical direction is given by

$$\% \text{ defln} = \frac{10\ Wtd}{A + B}$$

Where A = Resistance of pipe due to its mean diameter (d), thickness (t) and modules (E in Kg/cm^2) and is given by

All rights reserved

$$\left(\frac{2E}{10^6}\right)x\left(\frac{t}{d}\right)$$

And B = 120 E_S (E_S being modules of elasticity of soil in Kg/cm^2 at overburden pressure as determined in a triaxial test). Here soil pressure acting externally on the pipe surface shall resist Wtd. The enveloping forces are acting radially and the pipe ring is a confined arch under compression.

E_S = 4 TO 10 X 10^3 Kg/cm^2 in good ground above water table according to compaction.

E_S = 2 to 5 x 10^3 Kg/cm^2 in poor ground or in good ground below water table.

7.0 When there is no soil pressure on the pipe surface, B = O and when soil pressure is acting radially over pipe surface, A is negligible in comparison to B and hence A = O.

8.0 Percentage deflection thus obtained should not be more than 2%.

9.0 Strength consideration.

10.0 Emparical formula for Bursting strength is

Wts $\leq \sqrt{\frac{\pi}{4}Esx\beta x\left(\frac{t}{d}\right)x10^{-6}}$

11.0 Emperical formula for bending strain is given by

$$5 \times \%\ \text{deflection} \times \left(\frac{t}{d}\right)$$

12.0 Design consideration

13.0 In burried pipe at any depth

a) % deflection $\leq$ 2% (Calculated as per CL.-3.0)

b) Bursting strength (Wts) $\leq$ value obtained as per Clause 4.1

c) Bending strain shall be less than 0.35% for non-pressure pipe and 0.2% for pressure pipe. (Calculated as per CL. - 4.2)

All rights reserved

For safe burried pipe, above three conditions (under Clause 5.1) should be satisfied.

Reference - Hand book of valves, piping and pipelines (book) by R.H. Warring

(Gulf Publishing Company, Book Divn.)

All rights reserved

FINAL ACCEPTANCE CERTIFICATE FOR U.G.PIPING (COOLING WATER)

OWNER'S NAME :

WORK ORDER NO. :

DATE :

CONTRACTING FIRM :

CONTRACTOR'S REF. :

SUB U.G.COOLING WATER PIPING

i)	Check of layout as per piping arrangement drawing	--	
ii)	Check of special supports/Anchor Blocks and standard supports	--	
iii)	Check system as per P&I Drg.No.	--	
iv)	Acceptance of X-Ray examination	--	
v)	Acceptance of D.P. Inspection of trench joint (Root run only)	--	
vi)	Accpetance of Heat Treatment (if any)	--	
vii)	Hydrotesting of the system on (date)	--	
	-- Pressure		
	-- Duration		
	-- Remarks		
viii)	Installation of valves Total Number	--	
ix)	Making of valve chamber	--	Total No. -- Water Proofing --
x)	Check supply of items in scope of Contractor and its test certificate.	--	
xi)	Special Remarks		

CONTRACTOR PDIL OWNER

All rights reserved

DESIGN PHILOSOPHY

STATIC EQUIPMENT

FOR

COMMON EEFLUENT TREATMENT SYSTEM

FOR CPIIUC ALATHUR

CONTENTS

SL.NO.	DESCRIPTION
1.0	General
2.0	Other Criteria
3.0	Technical Requirement (FRP equipment)
4.0	Technical Requirement (Metallic equipment)
5.0	Guarantees
6.0	Spare Parts

LIST OF ATTACHMENTS

ATTACHMENT NUMBER	DESCRIPTION	NUMBER OF SHEETS
Annexure - 1	Painting Specification (Static Equipment)	1

1.0 GENERAL

1.1 Scope

1.1.1 This document defines the minimum technical requirements for design, materials, fabrication, assembly, inspection and testing, surface preparation, supply, erection supervision (for site erected equipment if required) and site erection for FRP equipment, Pressure Vessels, Filters, Storage Tanks and Internals for the common effluent treatment plant for CPIIUC, ALATHUR For Chennai Pharma Industrial Infrastructure Up gradation Company (CPIIUC).

1.1.2 The complete design, material of construction/fabrication (shop/site as applicable), inspection, testing, painting, supply, transportation and erection of equipment etc. at project site shall conform to the specifications, drawings and internationally accepted codes / standards duly accepted by the Owner. In addition, all statutory rules & regulations shall also be complied with.

1.2. RELEVANT CODES AND STANDARDS

1.2.1 Codes, Standards and Regulations

The equipment shall comply in design. materials, manufacturing, inspection, testing and performance with the latest revision (including latest addenda) of the applicable codes, standards, of internationally recognized standards origination, such as listed below, which are appropriate to the country of the origin of the equipment:

<u>Codes</u>

- Construction
  - ASME X Rule for Construction
  - ASME Section VIII Div 1 & 2 Rules for construction of Unfired Pressure Vessels
  - IS: 875 For wind load consideration
  - IS: 1893 (Part 4):2005 For seismic design consideration

- Materials and material testing

• ASTM C-581	Chemical resistance of Resins
• ASTM D-2150	Woven roving Laminated FRP
• ASTM D-2583	FRP hardness test
• ASTM D-2584	Ignition loss of cured FRP
• ASTM D-2990	Flexural creep and Creep-rupture
• ASTM D-2997	Machine made FRP pipe
• ASTM D-3299	Filament-wound reinforcing
• ASTM D-3892	Resin and FRP packaging
• ASTM D-4024	Machine made FRP flanges
• ASTM D-4097	Contact-molded FRP tanks
• ASTM D-5421	Contact-molded FRP flanges
• ASTM D-618	Plastics testing conditions
• ASTM D-638	Plastics tensile properties testing
• ASTM D-695	Plastics compressive testing
• ASTM D-883	Plastics terminology
• ASTM F-412	Plastics piping terminology

- Equipment testing

• ASME V	Non-destructive examination

- Flange Drilling and bolting

• ASME/ ANSI B 16.5	Flanges and flange fittings
• ASME/ANSI B 16.47	Large diameter steel flanges

Conformity with codes means compliance with codes and the relevant codes good practices Wherever this has been mentioned.

In the event of conflicting information between different codes, regulations, standards, and the requirements, the most stringent shall be applied.

The use of any other codes proposed by the LSTK CONTRACTOR shall be authorize only under OWNER's approvals.

Notes:

1. LSTK Contractor may select any other well known international materials as substituted materials to ASTM/ASME ones, if they are equivalent or superior to ASTM / ASME ones. The chemical & mechanical properties of such equivalent or superior offered materials preferably comparison w.r.t. ASTM materials shall be furnished along the bid. LSTK Contractor shall also submit the references of past supplies of similar type of equipment w.r.t. the proposed materials offered by them in their bid.

2. Process licensors guidelines / standards may be adopted complying minimum requirements of this design philosophy of static equipment. Details of such selected guidelines/standards along with the list shall be furnished in the bid.

1.3 Regulations

Besides codes & standards, LSTK Contractor shall follow National Laws and Regulations together with Local by Laws for the state including statutory requirements as applicable. Static and Mobile Pressure Vessel (SMPV) rules as applicable shall also be complied with.

1.4 Site Conditions

1.4.1 Climatic and other site conditions as defined elsewhere.

1.5 Operating Duty

1.5.1 Service shall be twenty-four (24) hours per day, seven (7) days per week, and fifty-two (52) weeks per year. The equipment design life shall be 25 years.

1.6 Language and Measurement Units

LSTK CONTRACTOR documents shall be produced in English. International System of Units (SI) shall be used for design, calculations, drawings and any other document related to the Project.

1.7 Design Documentation

1.7.1 Detailed design calculations considering different loadings shall be made as per code/standards and the additional requirements as mentioned below:-

1.7.2 Design of equipment inside the EFFLUENT TREATMENT PLANT shall be in accordance with the process licensor's data sheets and specifications.

1.7.3 LSTK Contractor shall consider the interfaces with other engineering disciplines w.r.t.

- Piping Layout/Location Drawings
- Civil / Structural Drawings
- P & ID's
- Materials
- 3D PDS Model for Piping and Equipment Layout

- Hazardous Area Classification

1.7.4 Design philosophy of other disciplines shall be observed and shall be relevant to the extent applicable.

- Civil/Structural Design Criteria
- Piping Design Criteria
- Process Design Criteria
- Electrical and Instrumentation Design Criteria

1.8 Equipment Fabrication

1.8.1 Equipment design shall be based on maximizing shop fabrication and assembly where deemed practical. Fabrication in open yard shall be avoided.

1.8.2 The LSTK Contractor shall comply in all respects with the provision of the applicable codes / standards and specification during fabrication.

1.8.3 Due provisions must be kept for venting out entrapped gases during welding of pads, flanges and liner plates etc.

1.8.4 In case of equipment involving site assembly/fabrication the entire site job including loading & unloading at site, fabrication, radiography, heat treatment, Inspection & testing etc. shall be included in the scope of supply.

1.8.5 All nozzle connections up to DN 250 size shall be made of seamless pipes. For sizes above DN 250 nozzles connection may be rolled from plates with full radiography of welds.

1.8.6 No welding, hammering or deforming is permitted on the pressure retaining parts after post weld heat treatment except as permitted by the codes or standards and when approved by the purchaser.

1.8.7 Flange facing and thread connection shall be protected against oxidation during HT.

1.8.8 A proposed Welding Procedure Specification (WPS) shall be submitted to approved inspection agency for approval. On approval, a Procedure Qualification Test (PQT) shall be conducted which shall be witnessed by approved inspection agency. On acceptance of all tests as per ASME Section IX, a final WPS along with Procedure Qualification Record (PQR) shall be submitted. Production welding shall start only after approval of final WPS/PQR and qualification of welders as per ASME Section IX, approved inspection agency may accept previously qualified WPS/PQR at his sole discretion.

1.8.9 Longitudinal and circumferential welded seams shall not interfere with nozzle openings, reinforcement plates, saddle pads, and other attachments as far as possible.

1.9 Construction & Erection

1.9.1 LSTK Contractor shall follow standard established procedures for handling storage, construction & erection. LSTK Contractor shall strictly follow Manufacturer's/Principal's instructions, approved drawings and procedures for construction & erection and satisfy Principal in all respects of storage, handling, construction & erection of Package. All erection work shall conform to the working/erection drawings (to be prepared by LSTK Contractor) and shall be in conformity with codes & standards as applicable. The LSTK Contractor shall supply & arrange all necessary construction & erection tools and tackles, machinery, scaffolding etc.

1.9.2 LSTK Contractor shall perform the following:

i) Before installing the equipment, the foundations shall be checked and wherever necessary, chipping shall be done by the LSTK Contractor. All grouting materials, packing plates/wedges required for the levelling and alignment of equipment, structures & pipelines etc. shall be provided.

ii) Top of the foundations shall be thoroughly cleaned to the satisfaction of Principal / LSTK Contractor before placing base plates.

iii) All equipment & structure etc. shall be checked and inspected for its proper levelling and granting (grouting) shall be done with suitable grouting material as required.

iv) After tightening the foundation bolts, the final level / alignment shall be rechecked and redone, if required.

v) Installation of all supports and hangers, including concreting or welding as necessary.

vi) To check correctness of the piping, instruments and other connecting points in the equipment and piping installed.

vii) The welding joints shall be stress relieved wherever necessary as per applicable codes, standards & specifications. .

1.9.3 The following shall be arranged and supplied by LSTK Contractor for completion of job. Any other item whatsoever required shall also be included by LSTK Contractor in their scope.

i) All construction & erection materials, equipment & machinery, scaffolding, consumable, and test equipment etc.

ii) Cranes/Hydra, temporary lifting beams and spreaders etc.

iii) Procedures for site assembly, construction & erection including lifting methodology for Owner/Third party approval.

2.0 Other Criteria

2.1.1 Lifting Devices

LSTK CONTRACTOR shall demonstrate by physical test that all Lifting lugs are capable of withstanding two times the allowable service load. The service load for each lug equals the empty weight of the tank.

Clearly mark equipment with its net weight. If vessel is fabricated in multiple sections, provide each section with a set of temporary lifting lugs for installation and alignment.

Design, locate and install sufficient lifting brackets necessary for handling during equipment's shipping, erection and maintenance.

The lifting capacity for erection and maintenance shall be given.

All equipment lifting details shall be contained in equipment drawings.

2.1.2 Equipment Top and Bottom Shapes

The style of equipment top whether open, cone, dome or flats shall be indicated in the data sheets by the LSTK Contractor.

Equipment bottom shapes shall be indicated in the data sheets by the LSTK Contractor.

2.1.3 Ladders, Platforms and Handrails

If applicable, ladders, platforms and handrails shall be indicated in the data sheets.

3.0 TECHNICAL REQUIREMENTS (FRP EQUIPMENTS)

3.1 Material

The various materials used in manufacturing of FRP equipment shall be described as composite materials. These composite materials consist of thermosetting polymer resin matrix with reinforced glass fibers.

The characteristic of the raw materials shall be guaranteed by the LSTK CONTRACTOR and certified by a test report to EN 10204 2.2

3.1.1 Resin

The type of the resin used for all layers shall be DERAKANE (Trade mark from Ashland Chemicals Chemicals) type 411 and type 470 (this for high temperature) or an equivalent resin.

The resin used shall be commercial grade thermosetting polymer and shall not contain filler and pigments, except when it will not interfere with visual inspection.

LSTK CONTRACTOR shall control the Self Life of the resins during fabrication of equipment.

3.1.2 Promoters, Accelerators and Inhibitors

The used system of them (promoters, accelerators and inhibitors) shall be adapted in accordance with the manufacturing system and the climatic and service conditions.

3.1.3 Additives and Solvents

3.1.3.1 Thixotropic Agent

Thixotropic agent shall not used except if required for the fabrication subjected to approval.

3.1.3.2 Colored Pigment

Colored pigment shall not be used.

3.1.3.3 Ultraviolet Inhibitors

Ultraviolet inhibitors shall only be used on the external layer.

3.1.4 Reinforcing Material

The reinforcing materials shall be a commercial grade of fiber glass having a coupling agent chemically compatible with the resin used.

The surface of reinforcing materials (fibers) shall be treated to provide a bond between the fibers and the resins matrix.

Ultraviolet protection shall be provided for the exterior layer for improved resistance to degradation by Ultraviolet radiation. The Ultraviolet protection shall not interfere with visual inspection of laminate quality.

Reinforcing materials used on the inner surface shall be in compliance with the latest edition of ASTM D3299.

3.1.5 Surface Veil

Depending on the chemical resistance of the corrosion barrier.

- Either type "C" glass
- Or synthetic surface veil (polyester fiber) such as TERGAL or DYNEL.

3.1.6 Chopped Strand Mat

450 g/m2 commercial grade type "E" glass shall be used. The use of 300 g/m2 or 600 g/m2 will be subject to approval.

3.1.7 Woven Roving

Max 500 g/m2 type "E" glass shall be used.

3.1.8 Roving

Commercial grade type "E" glass shall be used

3.1.9 Unidirectional Roving

Max. 500 g/cm2 type "E" glass shall be used.

3.1.10 Non Plastic Reinforcement

The use of steel profiles is forbidden excepted where absolutely necessary and shall normally be indicated in equipment data sheets.

Wood such as balsa or oak may be used depending on the strength required to be 'achieved. In this case, wooden surface is to be prepared carefully to obtain a good adhesion of the thermosetting resin.

3.1.11 Gaskets and Bolting

The materials of the gaskets and bolting are specified in the equipment data sheets.

3.2.1 Inner Surface Layer

The material used in inner surface shall be chemical resistant to the fluid .The LSTK CONTRACTOR shall provide documentation that confirms that material utilized for the inner surface is suitable for the fluid specified in the data sheet.

3.2.2 Interior Layer

This layer shall prevent weeping (leaking) with glass content (22% - 32%) by weight when tested in accordance with ASTM D-2584.

3.2.3 Structural layer

The reinforcement shall be continuous strand roving. The thickness of the structural layer shall be sufficient to provide minimum strength requirements at all various tank heights.

3.2.4 Exterior Layer

The exterior layer shall be of chopped strand, chopped strand mat, or surfacing mat. No glass fibers shall be exposed.

Resin used in the exterior layer shall be resistant to Ultraviolet degradation.

3.3 Bottom Knuckle Radius design

Bottom knuckle shall be reinforced with overlay layer. The reinforcement layer extension and thickness shall be according to the codes.

Reinforcement of the knuckle radius shall taper so it is tangent with flat bottom and shall not exceed beyond the tangent line onto the tank bottom.

The reinforcement perimeter shall not prevent the bottom from uniformly contacting the support surface

3.4 Flanges, Nozzles, Gaskets and Bolting

FRP flanged nozzle construction and design shall conform to ASME X, flange drilling and bolting shall conform to ANSI B16.5 ANSI B16.47 for Class 150# flat faced flanges as specified in equipment data sheets.

All openings should have additional reinforcement. Opening reinforcement area and limits shall be according to ASME X appendix AA4.

All fittings below liquid level shall be reinforced internally; the internal nozzle reinforcement shall be completely covered by the internal surface protection layer.

3.5 Nozzle Loads

All nozzles with an internal diameter of 100mm or less and nozzles of any sizes having a length exceeding the internal diameter shall be provided with supporting gussets.

3.6 Minimum Thickness

Equipment wall thickness shall be calculated according to codes. Whatever the results of the design calculations, the minimum structural wall thickness for tanks and vessels shall not be less than the tables here below:

3.6.1 Vertical Vessels and Tanks

D OUTSIDE DIAMETER (MM)	H HEIGHT (MM)	C MINIMUM STRUCTURAL WALL THICKNESS (EXCLUDING CORROSION BARRIER) (MM)

< 1000	≤ 2000 ≤ 4000 ≤ 6000	6 8 10
< 2000	≤ 3000 ≤ 5000 ≤ 7000	8 10 12
< 3000	≤ 4000 ≤ 6000 ≤ 8000	10 12 14
< 4000	≤ 4000 ≤ 6000 ≤ 8000	12 14 16

3.6.2 Horizontal Vessels (On Two Saddle Supports)

D OUTSIDE DIAMETER (MM)	H HEIGHT (MM)	C MINIMUM STRUCTURAL WALL THICKNESS (EXCLUDING CORROSION BARRIER) (MM)
< 1000	≤ 2000 ≤ 4000 ≤ 6000	6 8 10
< 2000	≤ 3000 ≤ 5000 ≤ 7000	10 15 20
< 3000	≤ 4000 ≤ 5000 ≤ 6000 ≤ 7000 ≤ 8000	15 18 23 25 28
< 4000	≤ 4000 ≤ 5000 ≤ 6000	24 28 32 "

	≤ 7000 ≤ 8000	36 40

3.7 Fabrication

3.7.1 Defects

Equipment shall be free of obvious defects such as foreign inclusions, dry spots, air bubbles, pin holes and de-laminations.

The exterior surfaces shall be smooth and free of exposed fibbers.

Internal surfaces shall be smooth, free of cracks and crazing according to codes.

3.7.2 Shop Assembly

Where possible, it is preferred that the equipment and components be supplied fully assembled.

Where final assembly in the shop is not possible due to transportation and site handling constraints, components shall be assembled to the maximum extend possible, match-mark and tag/identify the component parts to ensure proper assembly on site.

Identify individual pieces in accordance with the identification schedule used on the shop drawings and bill of materials to clearly indicate their location in the work for installation.

All the prefabricated components shall be connected to each other by bolting (no on site welding is allowed).

The site erection of the site erected equipment shall be executed by ERECTOR.

3.7.3 Corrosion Barrier

Corrosion barriers shall consist of the following layers:

- Gel coat: Three layers of pure resin giving a total thickness of 0.3 to 0.4 mm.
- Two layers of anticorrosion veil soaked in resin (resin content: 90 % by weight)
- Two layers of chopped strand mat soaked in resin (resin content: 75 % by weight)

The minimum corrosion barrier thickness shall be 2.6 mm.

3.7.4 Curing

Oven curing is preferred to polymerization at ambient temperature.

LSTK CONTRACTOR shall indicate in the bid the selected curing agent and curing procedure. Each curing agent shall be traceable. The curing agent and the resin to curing agent ratio used in fabrication shall be recorded.

3.8 Joints

3.8.1 Butt Type Joints

On the fluid side protection shall be ensured by the "gel-coat" and the same corrosion barrier as that used for the component parts to be assembled.· Width of this protection shall be between 100 and 200 mm. It shall be constructed by contact moulding .

When interior is not accessible, ends shall be tapered, then a corrosion resistant layer applied.

Adhesion between secondary overlay and component parts shall be ensured by proper sanding and de-dusting.

Strength of secondary overlay shall be at least equivalent to that of structural laminate of the two component parts.

Width of secondary overlay shall be at least larger than the largest of following values:

- 16 times the thickness
- 1/10 time the diameter
- 150 mm.

3.8.2 Dished Head or Bottom to Shell Attachment

Glued assemblies shall be carried out with a compound of same nature and chemicalresistance as that of the "gel-coat". No crevice or porosity shall be admitted.

3.8.3 Nozzle-Branches, Flanges and manholes

Preferred method is that where nozzles are moulded together with the element which they are attached to, so as to obtain a continuous layer of gel-coat without any break.

The installation of stub-in branch connections shall be done using the butt type procedure, with internal and exterior lamination. The area around a nozzle or manhole shall be reinforced to compensate for the cut out parts. Flanges shall be moulded together with their nozzle. Formed integral flanges shall be made of FRP. Loose flanges on FRP stub ends will be made of epoxy painted carbon steel. Blind FRP flanges will have steel insert. Blind flanges shall have same structure as on shell or bottom.

Under 4", all nozzles shall be stiffened with gusset plates

The dimension from the flange face to the inner surface of the equipment shall be 150mm unless otherwise specified in the drawings.

3.9 Tolerances

The equipment dimensions and location of nozzles, man ways and other attachments shall be as detailed on the LSTK CONTRACTOR drawings(Equipment drawings). Tolerances shall be as stated in the applicable code and standard and the here below table

Wall thickness of components operating under vacuum or pressure	- 0 % to + 12 % of calculated thickness
Wall thickness of components operating under atmospheric pressure	- 12 % to + 12 % of thickness specified on drawings
Outside diameter	± 0.5 % of specified diameter, limited to : 1 mm for pipes 5 mm for vessels and ducts
Roundness: Difference in length of diameters	1 % of specified diameter limited, to: 1 mm for pipes 5 mm for vessels and ducts
Nozzle length	±3 mm measured from shell surface
Slant of flanges	± 1 % in relation to shell surface
Distances between two nozzles	± 1.5 mm
Height or overall length	±6mm
Distance between saddle supports	±5mm
Nozzle orientation	± 3 mm measured in the hoop direction From reference centre lines
Nozzle location	± 3 mm in relation to bottom tangent line.

3.10 Hydrostatic testing

Hydrostatic test of the equipment is by filling the equipment with water 12" above the top crown of the equipment through using a temporary standpipe.

If the equipment is to be hydro-tested then it shall be indicated in the equipment datasheet. Test shall be held for minimum of 4 hours.

Any leaks or defects found shall be repaired by the LSTK CONTRACTOR and the equipment shall be hydrostatically retested.

3.11 Preparation for shipment

After completion of hydrostatic testing. the equipment shall be drained and dried. Internals shall be fitted only after hydrostatic testing. Flanges and openings shall be protected with PVC or wooden discs which should be fixed with at least 4 bolts.

Threaded ends shall be protected with PVC caps. Each component shall be well supported and braced..

3.12 Name Plates

3.12.1 General

Equipment shall be provided with stainless steel nameplate. The nameplate thickness shall be sufficient to resist distortion due the application of marking and not less than 4mm. It shall be permanently fixed on a pad or bracket on the equipment.

For thermally insulated equipment the projection the nameplate shall be adjusted according to insulation thickness.

3.13. QUALITY REQUIREMENTS, INSPECTION AND TESTING

3.13.1 General

LSTK CONTRACTOR shall prepare a Quality Control Plan (QCP) and an Inspection Test Protocol (ITP) in accordance with codes and specification.

Inspection and Test Plan (ITP) shall be prepared to reflect the specifics of each type of equipment and the requirements outlined in specification.

Qualified inspector is to be chosen to perform inspection during and after fabrication, the later shall certify the inspection (in the manufacturing data report) to confirm that design, material, fabrication and testing have met ·the requirements all applicable codes, laws and regulations.

Following completion of the work, the LSTK CONTRACTOR is to issue a history docket comprised of quality certificate:" inspection and test records, any other relevant documents related to manufacturing and testing for record files.

3.14 Testing

3.14.1 Inspection and testing

a) Equipment shall be inspected by TPIA The Inspection and testing shall be in accordance with the relevant codes, standards, specifications. All equipment & bought -out items shall be inspected during various stages of manufacturing starting from identification of materials to final completion as per agreed QAP which shall be prepared by LSTK Contractor and shall duly approved by Owner/ It's authorised representative. In case of site fabricated/assembled equipment same inspection agency shall be responsible for inspection and testing at site.

The guidelines for minimum inspection requirements are listed under Inspection & Testing clause of the design philosophy.

b) The following NDT requirements are mandatory in addition to code /spec requirements:

- Barcol hardness tests shall be carried out on at least 3 points alongside 4 generatrices at 90° angle from each other, with a total of at least 12 points.

On average, readings must be above 90 % of the hardness specified by resin VENDOR. No reading shall be under 80 % of the specified hardness.

- Polymerization shall be checked by rubbing the laminate surface with a cotton ball

saturated with acetone. The surface must not become tacky. If necessary, a residual styrene test may be required.

- Checking of joints.

They must all conform to this specification.

- Visual inspection
  - No fibre shall be prominent at the surface of the "gel-coat"
  - The "gel-coat" must be smooth and shining, without any crevice or hole.
  - Tiny bubbles in the "gel-coat" shall be tolerated only if they withstand without bursting, the pressure exerted with a ball-pen.
  - Small bubbles under the "gel-coat" shall not be tolerated.
  - Small bubbles under the corrosion barrier shall not be accepted.
  - Crevices and holes shall not be admitted.

- Checking of laminate composition
  - A burn out test shall be carried out in the VENDOR's works to check the laminate

structure as well as the resin/fibre ratio.

Deformation under load: during hydro-tests or plant commissioning, modification in

sizes shall be measured.

- Deformations larger than 1.2 % are not acceptable.
- Permanent deformations shall not exceed 0.1 % of original size.

- Extra tests.

  The OWNER reserve themselves the right to check, at their own cost, mechanical characteristics of the laminate, by carrying out tensile/flexion tests on cut-outs from fabrication.

- LSTK CONTRACTOR shall issue a repair procedure. The repair procedure shall be approved by the OWNER.

3.14.2 Workshop testing

All instruments and safety equipment provided by LSTK CONTRACTOR shall be verified to be working correctly.

The LSTK CONTRACTOR shall arrange a mutually convenient time, 10 working days in advance, in order that the OWNER or his representative may be present to witness QC activities and the tests.

The testing procedure shall be submitted before invitation.

3.14.3 Rejection

The OWNER has the authority to require repairs or alteration, if in his/her opinion the materials or workmanship do not meet the required specifications. If non-compliance is detected, LSTK CONTRACTOR shall submit a non-compliance report within 48 hours to the OWNER.

In accordance with the gravity of the defects, if any were to be found, the OWNER reserves the right to demand rectification or reject the faulty equipment without prejudice.

Remove, replace, and retest defective materials disclosed by testing

Any omission or failure on the part of the OWNER to disapprove or reject work or materials will not be construed as an acceptance of defective work or materials.

The OWNER review and approval of the VENDOR's drawings or release of the equipment for shipment, in no way relieves the LSTK CONTRACTOR of the responsibility for complying with provisions of this document.

3.14.4 All external surfaces of shop fabricated equipment shall be painted in the vendor's shop. Surface Preparation, Materials, Application and Touch-up according to Manufacturer's Standard subjected to Client's approval.

4.0 TECHNICAL REQUIREMENT (METALIC EQUIPMENTS)

4.1 Material of Construction

The minimum requirement of the materials shall be as per the plant equipment metallurgy covered under specific process design guidelines. However superior materials as per the recommendation of Process Licensor's may be selected which shall be indicated in the Bid by the LSTK Contractor.

4.1.2 All materials, whatsoever, required to complete the supplies shall be procured by LSTK Contractor and all such materials shall be covered with due identifiable material test certificate.

4.1.3 Materials used in low temperature service shall be impact tested (charpy V) if required as per design code & specification. Impact test & energy value shall be in accordance with code requirement, unless specified otherwise.

4.1.4 All CS & LAS materials including forging used for pressure parts shall be procured in fully killed and normalized condition.

4.1.5 All SS plates shall be hot rolled & solution annealed and pickled as per SA 480.

4.1.6 All forgings including nozzle flanges shall be examined for surface defects by MP/PT testing after machining as per ASTM A 275.

4.1.7 Unless more restrictive prescription given by material specification the max. content for carbon steel used for fabrication as shown by ladle analysis shall be 0.23% for plates, pipes & tubes & 0.25% for forging.

4.2 General

4.2.1 Design conditions for all equipment shall be in accordance with the Process Licensor's data sheets/specifications.

4.2.2 Design pressure is normally specified at the top of vertical vessel or at the highest point of horizontal vessel. The design pressure at any lower point shall be determined by adding the maximum operating liquid head and any pressure gradient within the vessel.

4.2.3 Wind forces shall be increased by 20% to cater for the effect of piping system, platforms and ladders etc.

4.2.4 Forces and moments acting on nozzles shall be considered in the equipment design. The exact forces & moments shall be indicated after piping layout which shall be considered by equipment supplier.

4.2.5 All Carbon Steel (CS) and Low-Alloy Steel (LAS) pressure parts shall have 3 mm corrosion allowance unless specified otherwise. All internal CS & LAS parts shall have at least 1.5 mm Corrosion Allowance on either side. No corrosion allowance shall be considered for SS. In general, the recommendation of Process Licensor shall be adopted for construction.

4.2.6 Design of supports and anchor bolts considering soil and importance factors shall be performed for compressive and tensile loading. In no case shall diameter of anchor bolts be less than M24 for skirt support and M16 for other type of support.

4.2.7 Lifting lug, lifting trunion, tailing lug etc. shall be designed with shock factor 2.

4.2.8 When design pressure is more than 600# class and/or shell thickness is 50 mm and above, selfreinforced forged nozzle shall be provided.

4.3 Vessels

4.3.1 Vessels shall conform to the requirements of ASME Section VIII Division 1 & 2 Pressure Vessels codes and Technical Specifications mentioned in the design criterion.

4.3.2 For vessels, the minimum thickness of shell & heads, including corrosion allowance shall be as indicated below:

S. No.	Shell Diameter (mm)	Thickness (Min.) mm	
		CS / LAS	HAS
1	ID < 500	5	3
2	501 < ID < 1200	5	4
3	1201 < ID <2000	6	5
4	2001 < ID < 2600	8	6
5	ID > 2600	10	8
CS = Carbon Steel LAS = Low-Alloy Steel HAS = High-Alloy Steel			

4.3.3 Manhole/hand hole/blind holes covers shall be equipped with davits or hinges to facilitate handling.

4.3.4 Manhole size of 24” is preferred. However, for shell dia. 1000 mm & above minimum size of manhole shall be 20" and for shell dia. 1000 mm & below 18" manhole size shall be minimum.

4.3.5 Use of structural steel shall be limited to non-pressure parts only.

4.4 Tanks

4.4.1 For Storage tanks the minimum thickness shall be based on stability considerations. Minimum thickness for roof & shell shall be 5 mm, and bottom plate 6 mm, excluding corrosion allowance.

4.4.2 Storage tanks up to 4meter in diameter shall be shop fabricated items. Tanks with diameters greater than 4 meter shall be field erected.

4.4.3 Tanks constructed of stainless steel shall comply with API 650, Appendix S.

4.4.4 Shell seams shall be located to clear openings to the maximum extent possible in accordance with API 650.

4.4.5 Bottom plates may be lap-welded with the lap toward the direction of drainage. Buttwelded bottom plates shall be furnished when specified on the tank drawings or data sheets or when tanks are specified to have rubber lining.

4.4.6 For each surface in contact with product/vapor, the specified corrosion allowance shall be added to the required thickness of all load-carrying components including shell, roof, bottom and roof supports. & One-half the specified corrosion allowance shall be added to each surface of nonload-carrying internal components.

4.4.7 All walkways, stairways, and platforms shall be furnished with handrails on open or exposed sides.

4.5 Inspection and Testing

4.5.1 Equipment shall be inspected by TPIA. The Inspection and testing shall be in accordance with the relevant codes, standards, specificationsThe Inspection and testing shall be in accordance with the relevant codes, standards, specifications. All equipment & bought -out items shall be inspected during various stages of manufacturing starting from identification of materials to final completion as per agreed QAP which shall be prepared by LSTK Contractor and shall duly approved by Owner/ It's authorised representative. In case of site fabricated/assembled equipment same inspection agency shall be responsible for inspection and testing at site

4.5.2 All testing accessories, measuring instruments including NDT testing equipment, etc. shall be arranged by LSTK Contractor.

4.5.3. All completed equipment shall be tested hydraulically as per the requirements of Specification/codes in presence of the inspecting authority. Pneumatic test of completed Equipment shall be carried out only when specially mentioned in the specification sheets. Chloride content in water used for testing shall not exceed 30 ppm for SS equipment and 40 ppm for CS and low alloy steel equipment. Duration of test shall be 1 hour minimum. After hydro testing stainless steel vessels shall be dried thoroughly immediately after draining to prevent the possibility of evaporation & concentration of chlorides

4.5.4 All process equipments shall be supplied with Nitrogen filled. In case of equipment assembled and welded at site, it shall be filled with N_2 after testing at site. Dry Nitrogen shall be filled at a pressure of 0.5 Kg/cm^{2}g and equipment shall be fitted with a pressure gauge and valve along with nitrogen cylinder.

4.5.5 Special tools/tackles as recommended by equipment manufacturer shall be included in the scope of contractor. Hydraulic bolt tensioners where specifically recommended by Process Licenser's specification shall be supplied with 4 bolt tightening heads.

4.5.6 All raw materials shall be inspected at source and test certificates to enable proper identification shall be submitted.

4.6 Painting

4.6.1 All external surfaces of shop fabricated equipment shall be painted in the vendor's shop. For guidelines of painting refer Annexure-1.

4.7 Pickling and Passivation

All SS material shall be Pickled & Passivated as per following procedures:

4.7.1 Pickling

Aqueous pickling solution shall be as follows:

Nitric acid (Tech grade)-10 to 25% plus Hydrofluoric acid-1 to 8% (to be used only for stabilized SS grades). Temperature 50 to 60° C for 10% Nitric acid and 20° C for 25% Nitric acid. When size and shape of product permit, total immersion in the pickling solution is preferred. Where immersion is impractical, pickling may be accomplished by wetting the surface by

i) Swabbing or spraying

ii) Partial filling the item with pickling solution and rotating or rocking so that the entire surfaces receive the required chemical treatment.

The maximum period for which the pickling solution shall be allowed to remain on the surface is 30 minute. During pickling removal of oxides may be hastened by brushing with a hard fiber or SS wire brush. Over pickling shall be avoided.

The pickling agent shall be washed off with plenty of water so as to leave no trace behind.

4.7.2 Passivation

After pickling and water rinsing, an aqueous caustic permanganate solution containing NaOH 10 weight % and $KMnO_4$ 4 weight % shall be used for neutralizing pickling solution. This shall be followed by thorough water rinsing.

Water used for pickling and washing shall not have chloride contents exceeding 30 ppm.

4.8 Fire proofing

4.8.1 Fire proofing, if required shall be considered as per Process Licensor's recommendations.

4.9 Insulation

4.9.1 The equipment shall be insulated as defined in Piping Design philosophy.

4.10 Operability and Maintenance

4.10.1 Equipment design and layout shall provide for ease of access, operability and maintenance.

4.11 Despatch

4.11.1 Equipment intended for ship transportation shall be transported in the hatch of the ship. Suitable seaworthy packing/painting shall be applied to avoid any damage during transportation.

4.11.2 The complete transport, packing & forwarding of equipment shall be the responsibility of bidder. In case of inland transportation, equipment shall be properly lashed/fixed on the wagon/trailer to avoid any damage due to shocks during transport. In case of ODC (Over Dimensional Consignment) movement, ODC sanction for movement either by rail/road shall be arranged by bidder from appropriate authorities.

4.11.3 All spares shall be properly packed, marked & sent separately along with equipment.

4.11.4 Equipment shall be despatched with nitrogen filling. Dry nitrogen shall be filled at a pressure of 0.5 kg/cm2g and equipment shall be filled with a pressure gauge and a valve.

5.0 Guarantees

5.1 Mechanical Guarantee

Bidder shall guarantee the equipment & their components against faulty design with regard to their mechanical adequacy, improper material of construction & poor workmanship for the period specified in contract.

5.2 Performance Guarantee

Bidder shall stand Guarantee of equipment as per respective technical specification. All losses due to atmospheric or/and seismic conditions or other causes, shall be taken into account.

6.0 SPARE PARTS

6.1 Commissioning Spares

6.1.1 All commissioning spares shall be included by LSTK Contractor in their scope of supply and shall be part of the main equipment

6.2 Spares for 2 Years Operation

6.2.1 2 years operation spares shall be supplied by the contractor as per below philosophy.
For Erection & Commissioning:

A) For Main Equipment:

i) 200% gaskets for each nozzle connection with blind flanges & girth flanges

ii) 10% studs / bolts & nuts for each connection (minimum 2 pieces of each size)

iii) 10% internal bolts, nuts & clamps (minimum 2 pieces of each size)

b) For Internals:

i) Clamps 2% excess, min. 5 pieces

ii) Bolts & Nuts 15% excess, min. 10 pieces

iii) Washer 20% excess, min. 10 pieces

iv) Gasket 25% excess, min. 3 pieces

1.2 For 2 years' operation:

a) For Main Equipment:

i) 200% gaskets for each nozzle connection having blind flanges & girth flanges

ii) 10% studs / bolts & nuts for each connection (minimum 2 pieces of each size)

b) For Internals:

i) Clamps 2% excess, min. 5 pieces

ii) Bolts & Nuts 15% excess, min. 10 pieces

iii) Washer 20% excess, min. 10 pieces

iv) Gasket 25% excess, min. 3 pieces

Note : Supply of any additional spares if required for erection and commissioning spares whatsoever required shall be under Bidder's scope. Bidder shall furnish the list of such spares

ANNEXURE-1

PAINTING SPECIFICATION (METALIC EQUIPMENTS)

S. No.	Application	Generic Coating System	Minimum DFT	Surface
1.0	Uninsulated C.S. to 400 ^{0}C where topcoat is not required. (to 120 ^{0}C if surface is repaired)	Primer: Inorganic ethyl zinc silicate primer Repair of damaged paint surface: Two component, metallic zinc rich epoxy primer.	Primer: 75 micron Repair: 75 micron Total: 75 micron	As per SA 2½ (Min.)
2.0	Uninsulated C.S. to 83 ^{0}C where topcoat is required. (intermittent to 120 ^{0}C)	Primer: Epoxy zinc phosphate Finish: Recoat able high-build Epoxy	Primer: 75 micron Finish Coat: 150 micron Total: 225 micron	As per SA 2½ (Min.)
3.0	Uninsulated C.S. to 260 ^{0}C where topcoat is required.	Primer: Inorganic ethyl zinc silicate primer. Finish: High Temperature Silicone Acrylic	Primer: 75 micron 1st Coat: 40 micron 2nd Coat: 40 micron Total: 155 micron	As per SA 2½ (Min.)
4.0	Uninsulated C.S. 201 ^{0}C to 540 ^{0}C where topcoat is required.	Primer: Inorganic ethyl zinc silicate primer. Finish: Modified Silicone Aluminium 2 coats	Primer: 75 micron 1st Coat: 25 micron 2nd Coat:25 micron Total: 125 micron	As per SA 2½ (Min.)
5.0	Insulated CS normally to 200 ^{0}C, or having cyclic,	Primer: High Temperature Phenolic Epoxy	1st Coat: 100 micron 2nd Coat: 100 micron	As per SA 2½ (Min.)

	intermittent or dual operating temperatures up to 230 ^{0}C.	Finish: High Temperature Phenolic Epoxy	Total: 200 micron	
6.0	Insulated C.S. up to 540 ^{0}C.	Inorganic Zinc Primer	Total : 75 micron	As per SA 2½ (Min.)
7.0	Structural Steelwork with operating temperature up to 90 ^{0}C	Hot Dip Galvanising		
8.0	High Temperature equipment	Primer/Finish Coat : Intetherm 50 or Equivalent (Total 3 coats)	Total : 75 micron	As per SA 2½ (Min.)

TECHNICAL SPECFICATIONS

MACHINERY/ROTATING EQUIPMENTS

CENTRIFUGAL PUMPS

TC: 5106

FOR

COMMON EFFLUENT TREATMENT PLANT

FOR CPIIUC, ALATHUR

FOR

CHENNNAI PHARMA INDUSTRIAL INFRASTRUCTURE UPGRADATION COMPANY (CPIIUC)

CONTENTS

Sl. No.	SECTIONS	PAGE NUMBER
1.	GENERAL	3
2.	BASIC DESIGN	4
3.	INSPECTION AND TESTING	8
4.	PREPARATION FOR SHIPMENT	10
5.	VENDOR'S DATA	11
6.	SPARE PARTS	11
7.	APPENDIX- I (DRAWINGS & DOCUMENTS SCHEDULE)	12
8.	APPENDIX- II (SPARE PARTS LIST)	13

NOTES: This document shall be used with relevant information contained in the documents listed below (in order of priority).

1. Letter for invitation of bid or succeeding official confirmed order.
2. Specification sheet of particular pump with relevant drawings, if any, for the project in question.
3. This document.
4. **Codes & Standards referred in the above mentioned documents and in this document.**

1.0 GENERAL

1.1 This standard shall be followed in establishing the minimum engineering requirements for centrifugal pumps for non-critical services / water handling services.

1.2 The pumps shall be designed, manufactured and supplied as per Hydraulic Institute Standard / DIN 24256 / ISO-2858 /IS-1520/ IS-13518/ IS-5120 Standard.

1.3 The pump shall be designed to develop the specified differential head at rated capacity, suction pressure and specific gravity while running at the rated speed. Rated speed of pump shall be full load speed of the drive motor. In case the driver is not in pump vendor's scope, full load speed of the driver shall be furnished to the pump vendor alongwith other details after order. The pump characteristics shall be guaranteed / tested with reference to the full load speed of motor.

1.4 Guarantee point shall refer to the differential head, rated capacity, specific gravity, and full load speed of the driver.

1.5 The pump and accessories shall be suitable for outdoor, unsheltered installation and continuous duty unless otherwise specified in the respective specification sheets.

1.6 The pumps shall be supplied complete with all the accessories as specified in the respective specification sheets inclusive of necessary appurtenances, auxiliary piping, special tools, spares etc.

1.7 Accessories required / recommended by pump vendor other than those specified in the pump specification sheet for safe and efficient operation of the pump unit shall be included in the pump vendor's scope of supply and the same shall be identified in the bid separately with adequate justification.

1.8 Deviations and/or exceptions to the enquiry specification sheet, enclosures, applicable standards, etc., must be listed for each document, clausewise with proper reason in a separate annexure in the bid. Otherwise it shall be assumed that all the requirements of the enquiry are acceptable without any reservation and shall be binding to the bidder.

1.9 Pumps shall have SI dimensions, comply with applicable ISO standards except for piping connections which shall be as per ANSI/ASME standard.

1.10 Reference list of pumps which are in operation for similar service conditions shall be furnished with the offer indicating broad specifications, purchase order number, date and name & address of user.

2.0 BASIC DESIGN

2.1 The shut off head of the pump shall be 105% to 120% of the head at rated capacity.

2.2 Maximum allowable noise level shall be within 90 dB (A) measured at a distance of 1.0 meter.

2.3 It should be possible to increase the head minimum by 5% by installing higher size impeller.

2.4 In addition to static balancing, impellers shall be dynamically balanced as per G6.3 of ISO-1940.

2.5 Pump inlet, outlet and auxiliary connections shall be flanged. All connections shall be provided with slip-on type companion flanges, nuts, bolts and gaskets.

2.6 Connections of $1^1/_4$, $21/_2$, $31/_2$, 5, 7 nominal pipe sizes shall not be used.

2.7 When specified, pump shall be provided with drip tray under the stuffing box and leak-off line with flange, companion flange, nuts, bolts and gaskets. Material composition shall be same as that of pump casing. Leak - off piping shall be arranged upto the edge of the base plate.

2.8 Pump inlet, outlet and auxiliary flanged connections shall confirm to the facing and drilling requirements of ANSI / ASME B 16.1 or ANSI / ASME B16.5.

2.9 All equipment shall be designed to permit rapid and economical maintenance. Major parts such as casing components and bearing housings shall be designed (shouldered or doweled) to ensure accurate alignment on reassembly.

2.10 Impeller shall be keyed to the pump shaft. Impeller nut shall be used to secure the impeller and a positive mechanical locking method shall be adopted.

2.11 The pump shaft shall be one piece for horizontal pumps. For vertical pumps number of shafts shall be minimum.

2.12 Shafts for horizontal pumps shall be fitted with deflectors. Deflectors shall be made of non-sparking material (corrosion resistant material for corrosive service).

2.14 Renewable wear ring surfaces shall be furnished on impeller and casing. Mating wear surfaces of hardenable materials shall have a difference in Brinell hardness number of at least 50.

2.15 Radial and thrust bearings shall be rolling element type. These shall be designed for 24,000 hours bearing life.

2.16 For between bearing pumps arrangement, bearing housing shall be cast integral with the lower half of the pump casing or bolted to it. Bearing housing should be provided with stiffening brackets and be sufficiently rigid to resist the dynamic loads during operation.

2.17 Castings shall be sound and free from shrink holes, blow holes, cracks, scale, blisters and other similar injurious defects. Ferrous pressure casting shall not be repaired by peening, plugging, burning in or impregnating. When weld repairs to castings are authorized by ASTM specification for the material, repair welding shall be carried out in accordance with that specification. Unless otherwise specified, weld repairs shall be inspected according to the same quality standards used to inspect the casting.

2.18 Material of construction of various pump parts shall be as per pump specification sheet. If the vendor considers other materials better, the

same shall be offered as an alternative only. Materials not specified in the specification sheet shall be selected by the vendor in accordance with the service conditions. Chemical composition and physical properties of the special materials, wherever used, must be furnished along with the offer.

2.19 Copper and copper alloys shall not be used for pump parts for application in ammonia and urea plants.

2.20 A name plate of 18 Cr - 8 Ni Stainless Steel or Monel, securely attached by stainless steel pins at an easily accessible point on the pump body shall be furnished. The name plate shall be stamped with following information:

- Purchaser's item number
- Pump serial number
- Capacity in m^3/h
- Differential head in meters
- Revolution per minute
- Casing hydrostatic test pressure in kg / cm^2g
- Absorbed power in kW

In addition to above an arrow shall be cast / attached at a reasonably observable point on the pump to indicate direction of rotation.

2.21 Motor shall have power ratings including service factor at least equal to following percentage of pump rated absorbed power. :

Pump absorbed power (in kW)	Motor rating percentage of absorbed power
< 22	125
22 - 55	115

> 55	110

2.22 Vendor shall indicate for vertical pumps, minimum liquid level for pump operation / startup in the offer.

2.23 For vertical pumps, a hole shall be provided in the column pipe above the maximum liquid level to relieve pressure on stuffing box.

2.24 For vertical the specified head shall be measured at the discharge flange, at pump mounting level. Pumps shall be suitable to develop specified discharge head in addition to column losses and vertical distance, between minimum level in the sump tank and center line of the discharge flange. Pump vendor shall indicate total head to be developed by the pump in the offer.

2.25 Vertical pumps taking suction from sump / vessel shall be furnished with corrosion resistant suction strainer. Perforation / mesh size shall be suitable for proper operation of pump. Sufficient free flow area of the strainer shall be provided.

2.26 Pumps shall be provided with shaft sleeve under mechanical seal.

2.27 Shaft sleeves shall be hard chrome oxide coated under flexible member of mechanical seal.

2.28 Gland Packed pumps shall not be offered.

2.29 When pumps are specified with mechanical seals

2.29.1 Make of mechanical seal shall be Durametallic (Flowserve), EPIL (Eagle Poonawala Industries Ltd.) or Burgmann make.

2.29.2 Mechanical seal shall be inside mounted, balanced type with Carbon versus Tungsten Carbide faces or Carbon versus Silicon Carbide faces. Suitable flushing plan shall be provided.

2.30 Coupling make shall be as follows:

Driver rating up to 25 kW : Lovejoy (RRL), Pinbush type Unique, Flender

Driver rating more than 25 kW : Pinbush type/All metallic type Rathi-Discoflex type M, Euroflex, Triveni-Flexibox

2.31 PUMPS FOR FIRE FIGHTING SYSTEM

2.31.1 Main fire water pumps shall be provided with gland packing.

2.31.2 Jockey pump shall be provided with mechanical seal.

3.0 INSPECTION AND TESTING

3.1 All pumps shall be subjected to inspection by PDIL inspector / inspector of purchaser or authorized inspecting agency as defined in the purchase order. Test and inspection plan shall be submitted to the inspector for approval. The inspector shall indicate additional test to be witnessed over and above the once specified in the pump specifications.

3.2 Inspector shall have free access at all reasonable times to the vendor's / sub vendor's shops. Vendor shall furnish to the inspector all necessary information and assistance to verify that the requirements of the order specifications have been met. The vendor shall give 2 weeks notice regarding readiness of material for inspection to the inspector.

3.3 Acceptance of shop test shall not relieve the vendor of this responsibility in any way.

3.4 Inspector shall witness / inspect the following :

3.4.1 Review of material test certificate for casing, impeller, shaft, shaft sleeve, wearing rings etc., and for spare parts.

3.4.2 Dynamic balancing of impeller as per ISO-1940

3.4.3 Hydrostatic test.

3.4.4 NPSHR test, when specified.

3.4.5 Performance test including vibration check.

3.4.6 Disassembly / strip down test.

3.4.7 Visual inspection and dimensional check.

3.5 Manufacturer's standard shall be applied with respect to the tolerances of each dimension.

3.6 All casting shall be visually inspected before machining for surface defects and irregularities.

3.7 All repairs of defects found on inspection shall be subjected to prior approval of purchaser's inspector.

3.8 PERFORMANCE TEST

3.8.1 Performance test of each pump in the manufacturer's shop shall be carried out, unless specified otherwise.

3.8.2 Pumps shall be operated in shop for a period sufficient to obtain complete test data. Unless otherwise agreed, the test speed shall be the rated speed of the pump.

3.8.3 Test procedure shall be as per Hydraulic Institute Standard / IS - 5120.

3.8.4 During the performance test, pump when operated at rated speed and rated capacity shall give guaranteed characteristics of total head, efficiency, brake kW and NPSH within the following tolerances.

Rated differential head : + 5%, - 2%

Rated kW : + 4%

NPSHR : 0

3.8.5 During performance test, pump shall operate without undue heating of bearings, excessive vibration, noise or other mechanical faults. Such defects if noticed shall be promptly rectified to the satisfaction of the inspector.

3.8.6 Instruments measurement tolerance shall be as per accuracy class I of IS-1520.

3.8.7 When operating fluid has viscosity appreciably higher than test fluid, test values of capacity, head, efficiency and power input shall be corrected to specified viscosity of operating fluid as per IS - 5120 / Hydraulic Institute Standard. Characteristic curves shall be plotted accordingly.

3.8.8 Job driver shall be used during performance test when ordered alongwith pump.

3.8.9 NPSHR test shall be conducted whenever specified in pump specification sheet. Test shall be done at 5 points from shut off to 110% of rated capacity.

3.9 HYDROSTATIC TEST

3.9.1 Each pressure casing shall be hydrostatically tested to 1.5 times the maximum allowable casing pressure. Multistage pumps may be segmentally tested at appropriate section pressure.

3.9.2 Test pressure shall be maintained for a minimum period of 30 minutes during hydrostatic test.

3.9.3 Vendor shall compile all the tests & inspection reports relevant to purchase order scope of supply in folder(s). Following reports must be included:

- Material certificates (chemical analysis, chemical test & impact test)
- Results of non destructive inspection
- Results of hydrostatic test
- Records of performance test
- Records of NPSH test
- Records of dimensions
- Other test conducted by vendor as per specification
- Guarantee certificates

4.0 PREPARATION FOR SHIPMENT

4.1 Pumps shall be despatched only after the shop test data and performance test curves are approved by the inspector.

4.2 The unmachined exterior surfaces shall be sand blasted, descaled and cleaned. The surface must be free from foreign material before paint is applied.

4.3 The external surface subject to atmospheric corrosion shall be painted with two coats of primer and two coats of epoxy based finish paint.

4.4 All the internal parts and machined unpainted exterior surfaces shall be protected with suitable rust preventive.

4.5 When driver is supplied with pump, the same shall be duly mounted on a common base frame.

4.6 Both halves of the coupling shall be supplied by vendor in machined condition.

4.7 Each unit shall be suitably packed for outdoor storage for at least six months.

5.0 VENDOR'S DATA

5.1 The pump vendor shall supply the drawings and documents as per Appendix - I.

5.2 Each drawings / documents shall have the following information in a separate block :

Owner's Name
Name of the Project / Plant
Consultant Name : PDIL
Purchase Order Number
Equipment Code Number / Name
Drawing Number / Revision Number
Supplier Reference Number

6.0 SPARE PARTS

6.1 Spare parts as per Appendix - II shall be quoted in the proforma enclosed with enquiry.

APPENDIX - I

DRAWINGS & DOCUMENT SCHEDULE

Bidder shall furnish alongwith each copy of bid

Vendor shall furnish **8** copies of drawings / documents for approval / review

Vendor shall furnish **12** copies and **2** transparencies of final documents

X - INDICATES APPLICABLE

			DESCRIPTION	Delivery Time in weeks	
				For Approval	Final
			GENERAL :		
	X	X	**1. List of drawings / documents including drawing number, revision number, description and approval status**	4	
X	X		**2. Detailed manufacturing program (Time bar chart)**	4	
X	X	X	**3. Certified dimensional outline & Installation Drawing including Size, Rating, Facing and location of all customer connections, overall weight and handling weights, overall dimensions and clearances, direction of rotation, etc.**	4	
X	X	X	**4. Cross sectional drawing (of the applicable) with complete bill of material**	4	
X	X	X	**5. Pump specification sheet in PDIL proforma**	4	
X		X	**6. Pump performance curves**	4	
X	X		**7. Q.A.P & Test procedures**	6	
X		X	**8. Spare parts as per Appendix - II**		
X			**9. Reference List**		
		X	**10. Test & inspection report**		
		X	**11. Instruction manuals describing installation, operation, and maintenance procedures.**		
			12. Drawings for driver as per specification & engineering standards enclosed with enquiry / order specification (		

				if pump is ordered with driver)			

NOTE:

1. TRANSPARENCIES SHALL BE FURNISHED BY VENDOR FOR DRAWING OF SIZE A2 AND ABOVE ONLY.
2. ALL THE FINAL DRAWINGS / DOCUMENTS MUST BE DELIVERED AT LEAST ONE WEEK BEFORE DESPATCH OF THE EQUIPMENT & ACCESSORIES.
3. **FINAL DRAWINGS / DOCUMENTS MUST BE SUBMITTED IN PROPERLY ARRANGED FOLDERS**.

APPENDIX - II				
SPARE PARTS LIST				
Sl. No.	Description	Qty. Reqd. in sets based on total number of pumps installed		
	PUMP :	**1 - 2**	**3**	**4**
1	Impeller with wearing ring	1	1	1
2	Impeller Locking Nut and Washers	1	3	3
3	Shaft with keys	1	2	2
4	Wearing Rings for impeller *	1	3	4
5	Wearing Rings for casing *	1	3	4
6	Throat bush	1	2	2
7	Shaft Sleeve *	1	1	1
8	Bearings Complete	1	2	2
9	Complete Coupling	1	1	1
10	Stuffing box packing *	1	4	4
11	Gaskets & 'O' Rings *	1	3	4
12	Complete Mechanical Seal (if applicable)	1	2	2
13	Intermediate bearing bushes (for vertical pump)	1	2	2
14	Intermediate bearing sleeves (for vertical pump)	1	2	2
15	Intermediate couplings (for vertical pump)	1	1	1

* One set of spares to be considered for commissioning in addition to above mentioned quantities.

NOTES:

1. "Set" means complete replacement of particular part in one machine.
2. The vendor may quote for any additional item required to be kept as spares. Likewise he may suggest if a particular item is not required in his opinion. If any change in quantity is considered desirable by him. It may be clearly stated.
3. **One set of Gaskets, Oil seals, "O" rings, Stuffing box, Packings etc. shall be supplied as commissioning spares for each pump.**

CONSTRUCTION/ERECTION, PRE-COMMISSIONING,

COMMISSIONING AND START UP

FOR

CETP

OF

CPIIUC ALATHUR

CONTENTS

Sl. No.	DESCRIPTION	SHEET NUMBER
1.0	General Scope of Works and Services Construction / Erection	
2.0	General Scope of Works and Services Pre-commissioning	
3.0	Mechanical completion	
4.0	Commissioning	
5.0	Start up	

CONSTRUCTION / ERECTION AND PRE COMMISSIONING

1.0**Generalscope of Work and services - Construction/Erection**

LSTK CONTRACTOR shall be responsible forconstruction and erection of all civil, mechanical, electrical and instrumentation works, assembly and Installation, obtaining all necessary statutory approvals, Testing, Mechanical Completion, Pre-Commissioning, Commissioning, Performance Guarantee Test Run (PGTR) including Total Project Management and handing over of the plants and facilities under contractor scope of work duly completed on single point responsibility basis.

LSTK CONTRACTOR shall be responsible for construction and erection of the PUnit(s), including but not limited to the following:

1.1 Construction and erection of Plant/Units and/or Utilities, and perform all other activities required to be performed for implementation of the WORK.

1.2 Provide and supply in due course all construction Equipment and Materials, tools, and temporary facilities necessary for implementation of the WORK.

1.3 Establish and operate adequate material control system in site for receipt, unloading, inspection, maintenance, handling, storage and utilization to ensure all Equipment and Materials are preserved and available as necessary for completion of the Plant/Unit.

1.4 Provide and supply all staff, tradesmen and labours for implementation of the WORK.

1.5 Establishment of overall construction policy and procedures for the Plant/Unit.

1.6 Provision of overall management and control of construction phase of the Plant/Unit.

1.7 Ensuring that all parts of the Plant/Unit are constructed and tested strictly in accordance with the specifications and applicable codes and standards asked for in the project documents.

1.8 Ensuring that construction is accomplished in accordance with the schedules.

1.9 Provide transportation of all Equipment and Materials to be provided and supplied by LSTK CONTRACTOR under the CONTRACT either from inside or outside to Site.

1.10 Construct, operate and maintain all temporary facilities required for its personnel involved in the WORK.

1.11 Provide transportation in the area of the Site and between Site and temporary facilities for all its personnel involved in the implementation of the WORK, including field labour, administrative staff, etc.

1.12 Recruit field and organize, manage and supervise its Sub Contractors and field labour for the WORK.

1.13 Provide liaison with OWNER, Sub Contractors, Licensors and Vendors to ensure that the Plant/Unit is constructed in accordance with the respective standard and specifications, set forth in the CONTRACT.

1.14 Establish with OWNER adequate procedures, control and reporting systems to provide close control of the progress of the WORK.

1.15 Provision of labour and facilities for loading, unloading and transportation of the Equipment within the site area.

1.16 Performance and/or provision of all other works and/or services required for performance of the WORK.

1.17 Execution of the whole civil, structural and building works of the Plant/Unit and/or utilities and off-site facilities.

1.18 Prefabrication of piping spools in a shop on the Site.

1.19 Erection and installation of EQUIPMENTS and auxiliary facilities associated with the Plant/Unit.

1.20 Erection and field fabrication of structural steelwork, cladding ladders, handrails, stairs and platform of the Plant/Unit and/or utilities and off-site facilities.

1.21 Installation of pipe work including field fabrication of the Plant/Unit.

1.22 Installation and testing of all instrumentation network and equipment of the Plant/Unit.

1.23 Installation and testing of electrical system and equipment of the Plant/Unit.

1.24 Installation of refractory including brickwork's of the Plant/Unit.

1.25 Painting of steelworks, piping, Equipment and building of the Plant/Unit.

1.26 Maintenance of construction equipment, vehicles and tackles of the Plant/Unit, during construction and erection period.

1.27 Pre-commissioning, Commissioning and Start-up of the Plant/Unit.

1.28 Carrying out Mechanical Completion as per finally approved P&ID after HAZOP Study.

1.29 Perform all material identification as per application codes and standards.

1.30 Provide winterization during construction.

1.31 Provide drawings and documents as required.

1.32 Supply to OWNER complete test records within three (3) days after completion of actual testing.

1.33 Supply to OWNER complete survey report within three (3) working day after completion of any survey.

1.34 Installation and testing of all underground piping.

2.0 GENERAL SCOPE OF WORK AND SERVICES- PRE-COMMISSIONING

LSTK CONTRACTOR shall be responsible for the pre-commissioning phase of the Plant/Unit.

LSTK CONTRACTOR shall provide at SITE an adequate number of qualified pre-commissioning engineers to direct and control pre-commissioning activities.

LSTK CONTRACTOR shall also ensure that all special tools and test equipment required for pre-commissioning are available at its own cost.

LSTK CONTRACTOR shall provide adequate construction labour, construction tools and equipment for pre-commissioning.

Pre-commissioning which shall be performed by LSTK CONTRACTOR shall include, but not limited to, the following:

2.1 Cleaning, flushing, draining blowing out, steaming out, drying and purging of Equipment and their linings and piping systems, including the installation and removal of temporary blinds, strainers, screens etc., and the replacement of all permanent items removed while the WORK is in progress.

2.2 Chemical cleaning wherever required, including but not limited to compressor suction piping and lube and seal oil piping, heaters, supply of chemical and disposal of wastes.

2.3. Chemical cleaning of feed water systems, boilers and steam systems, Supply of chemical and disposal of wastes.

2.4 Chemical cleaning of any other parts, which have corroded to an extent, which, will detrimentally affect Plant/Unit performance or run length for such reasons as increased fouling due to rust, Supply of chemical and disposal of wastes.

2.5 Checking, Testing, calibration simulation test and adjustment of instruments, equipment and systems including control valves and safety devices, and installation and checking of orifices plates and other sensor devices in so far as this can be done before actual operation of the item concerns of complete system and loops.

2.6 Function test and checking out of electrical systems including substations, transformers, cables and switchgear, checking of all interlocks and setting of all relays. This shall include drying out operations, filtering of oil if required.

2.7 For motor driven equipment, amperage checking of motors and removal of temporary safety screens.

2.8 Cleaning of screens and filters replacement and adjustment of packing and seals and tightening of flanges.

2.9 Introduction of fuels.

2.10 Introduction of lubricants and oil flushing for machinery.

2.11 Introduction of chemical into and initial operation of treatment plant.

2.12 Boiling out, bringing up to pressure and performing all required code tests on steam generation facilities and associated instrumentation.

2.13 Drying out of stacks and all refractory lined equipment.

2.14 For fired equipment, checking out of fuel gas, gas oil, and steam and air systems, testing of safety circuits and smoke test up to production.

2.15 For turbine driven equipment, the setting of turbine governors, over-speed trip setting, coupling of turbines, hot checking including hot alignment checking and cleaning and removal of temporary screens.

2.16 Preliminary operation of refrigeration compressors and systems.

Refrigeration compressors shall be run continuously for at least 72 hours, continuously.

2.17 Test running of all other compressor and drivers for 72 hours continuously without any problems and adjustment of all protection and safety devices.

2.18 For all piping systems, installation and removal of temporary blinds as required, circulation and commissioning of systems including process systems, services and potable water, effluent and drainage, fire protection, utilities distribution, relief and blow down and interconnecting lines.

2.19 Setting up of circulators and running in of pumps on water or other medium as appropriate for 24 hours wherever possible and all possible functional testing of instruments.

2.20 Test running of all other rotating equipment for 24 hours wherever possible.

2.21 Adjustment of all piping expansion and support devices.

2.22 Introduction of catalyst supports catalyst, desiccants and chemicals.

2.23 Air-drying of Plant/Unit, which is required to be water-free.

2.24 Testing (including running, tightness and vacuum) of systems, as necessary to ensure that the sections and components of Plant/Unit are ready for operation and purging the systems which are required nitrogen pressurizing the system by nitrogen.

2.25 All such further works which LSTK CONTRACTOR judges to be necessary or in the reasonable opinion of OWNER is necessary to bring the Plant/Unit to a state of readiness for the introduction of feedstock into Process Plant/Unit for processing requirements and for safe commencement of operation.

3.0 Mechanical Completion

Mechanical Completion means the time when all construction, erection & installation work as per finally approved P&ID after HAZOP Study and pre-commissioning related to the Plant/Unit is completed in accordance with the Project drawings and specifications, and all mechanical and pressure tests, including but not limited to hydro testing, non- operating adjustments, cold alignment checks, final cleanup, hot bolting, refractory drying, field calibration of safety valves, calibration of all instruments, instrument loop checking and testing, monitoring / control / safety systems checking and testing, and all pre-commissioning activities have been completed, all incoming & outgoing services and utilities have been connected to each unit of the PLANT, interconnections of process lines and interconnection are completed and the Plant/Unit is ready in every respect for commissioning and for the first introduction of feed stock.

When OWNER is satisfied that Mechanical Completion of the plant/ Units has been achieved, OWNER shall issue certificate of Mechanical Completion to LSTK CONTRACTOR in accordance with the CONTRACT.

In order to meet this, LSTK CONTRACTOR shall perform all necessary mechanical works, tests and checks.

4.0 COMMISSIONING

4.1 Schedule for Commissioning

LSTK CONTRACTOR shall prepare a schedule for commissioning, start-up, and performance testing and initial operation in conjunction with OWNER. This

shall be issued at least three months before pre commissioning of the first facility.

This schedule shall include all activities as detailed herein and any other special activities, which require to be performed during commissioning.

4.2 **Commissioning**

LSTK CONTRACTOR shall be responsible to perform commissioning of the Plants and to provide necessary facilities during commissioning of the Plant/Unit including the Performance Tests. LSTK CONTRACTOR shall provide commissioning engineers and supporting staff and adequate commissioning labour.

5.0 START UP

LSTK CONTRACTOR shall be responsible to perform start-up of the Plant/Unit. LSTK CONTRACTOR shall provide necessary facilities and for Start Up of the PLANT.

NOTE: Detailed LSTK CONTRACTOR'S scope of work in relation with the construction / erection, and pre-commissioning, commissioning and start-up from the point of scope of execution as well as performing way are described in detail in the following Sub-Annexureof Section- 6.0.

SITE WORKING AND SAFETY CONDITIONS

FOR

CETP

OF

CPIIUC

ALATHUR

TABLE OF CONTENTS

SL. NO.	DESCRIPTION	SHEET NUMBER
1.	SITE LOCATION	3
2.	SITE ESTABLISHMENT	3
3.	SUPERVISION OF WORK	5
4.	INSPECTION	5
5.	EMPLOYMENT OF LABOUR	5
6.	COMPLETION OF WORK	6
7.	WORKING AND SAFETY REGULATIONS	6
8.	ELECTRICAL SAFETY REGULATIONS	8
9.	REPORTING	9
10.	GENERAL SAFETY REQUIREMENTS TO BE OBSERVED DURING SITE FABRICATION AND ERECTION BY THE CONTRACTOR	9

2.0 SITE ESTABLISHMENT

2.1 The Construction contractor shall provide all huts, stores, tarpaulins and other covers for the accommodation of his staff, workmen and materials. All materials likely to deteriorate in the open shall be stored under suitable cover.

2.2 The LSTK contractor shall advise the owner within 15 days of the placement of LOI his space requirement which shall include for office, covered storage, open storage, fabrication space, etc. Depending on availability & requirement, space shall be allotted to the contractor for the duration of this contract. He will not be permitted to make use of any other space without the sanction of the Owner. The use of this space shall strictly be made for the execution of this contract only. The sanitary conditions of the ground in or around such structures shall, at all times, be maintained by the contractor in a manner satisfactory to the owner.

2.3 The security of the LSTK contractor's equipment and materials is his own responsibility.

2.4 The Construction contractor shall clear away periodically any rubbish, scrap materials, etc. and dump the same in the area indicated by the owner/consultant. All construction material shall be neatly stacked in an orderly manner as directed by the owner and care shall be taken to allow proper access to workmen and easy movement of men, vehicles, cranes and materials.

2.5 The Construction contractor shall maintain all the drawings carefully mounted on the board of appropriate size and well protected from the ravages of weather termites and other insects.

2.6 The Construction contractor shall not permit the entry to the site of any person not directly connected/concerned with the work without first having obtained the written permission of owner.

2.7 The Construction contractor shall submit a list of plant, equipments, tools, tackles, etc. which he will use, to perform the work. The contractor shall submit a list in duplicate of all materials, tools and tackles etc. brought inside the plant site duly signed by owner's security staff as per the rules laid by owner. These tools, etc. shall not be removed from the site till the completion of job. A gate pass must be obtained from the owner in order to remove from site any plant, machinery, tools, materials and equipment.

2.8 All items such as instructions and other pertinent data regarding erection/commissioning and maintenance should be typed and classified for transmittal in a manner approved by the owner.

2.9 All employees of the LSTK contractor / Construction Contractor shall conform to any rules of conduct, etc. established by owner. Failure to comply with the rules of coduct will be sufficient cause for removal of such person from the site.

2.10 The Construction Contractor will be responsible for providing all plant, tools and tackles, consumables and scaffolding required for the execution of his work as per the best engineering practices.

2.11 The receipt, unloading, movement and storage at site of all the Construction contractor's plant, tools and materials is his responsibility. The receipt, movement & storage of material issued by owner also shall be the responsibility of the Construction Contractor.

2.12 **ELECTRICITY**

Construction power shall be arranged by Construction Contractor Contractor.

2.13 **CONSTRUCTION WATER**

The Construction Contractor shall communicate his water requirements to the Owner within 7 days of the placement of LOI. Construction water, at single point, shall be arranged by Construction Contractor at his own cost. Any further distribution will be the responsibility of the Construction Contractor.

2.14 **FIRST AID**

The Construction Contractor may have access to the Owner's qualified first aid personnel and ambulance, in case of accidents, if available. The contractor will, however provide a first aid post for minor injuries to their staff.

3.0 SUPERVISION OF WORK

3.1 The Construction Contractor shall submit to the LSTK Contractor resume of his site supervisors for approval prior to commencement of the work. Once approved, the Construction Contractor shall not remove his site supervisors without prior concurrence of the Owner.

3.2 The entire work is to be completed as per the agreed time schedule. The programme of work in details shall be submitted by the Construction Contractor before commencement of work. The detailed programmes prepared by the LSTK contractor shall conform to the targets set forth in the time schedule and will be subject to the approval of the owner. All the work shall be carried out in such a manner that the work of other agencies at site is not hampered due to any action of the Construction Contractor.

4.0 INSPECTION

The work of the Construction Contractor shall be subject to inspection by the LSTK Contractor and/or Owner at all times.

5.0 EMPLOYMENT OF LABOUR

5.1 The Construction Contractor will be expected to employ on the work only his regular skilled employees with experience of this particular work. The permission of the Owner must be obtained before tradesman is recruited locally for the work. This rule does not apply to unskilled labour. No female labour shall be employed in dark hours/ i.e. hours prohibited under the applicable law. No person below the age of eighteen years shall be employed at any point of time.

5.2 All traveling expenses including provision of all necessary transport to and from site, lodging allowances and other payments to the Construction Contractor employees are his own responsibility.

5.3 The hours of work on LSTK Contractors / Owner and contractor shall adhere to the same.

5.4 All Construction contractors employees shall wear safety helmet and such identification marks as may be provided by Construction contractor on work site and duly approved by Owner.

5.5 All notices displayed on the site and any instructions issued by the Owner shall be strictly adhered to by the LSTK Contractors and/or his Construction contractor employees.

5.6 It shall be the responsibility of Construction contractor to provide suitable accommodation including necessary facilities for their labour and staff.

5.7 Construction contractor will arrange for Ration Cards and Permits for labour as per statutory provisions for its labour, as necessary.

5.8 The Construction contractor shall be required to maintain employment records as covered in relevant Acts and produce documentary evidence to the effect that he has discharged his obligations under the Employees Provident Fund Act 1952 for the workmen working at site.

5.9 In case the Owner becomes liable to pay any wages or dues to the labour of the LSTK Contractors or his Construction contractor or any Govt. agency under any of the provision of the Minimum Wages Act, Workmen Compensation Act or any other law due to act of omission of the Construction contractor, the Owner may make such payment and shall recover the sum from Contractor's bills or any other dues.

6.0 COMPLETION OF WORK

Before finally leaving site, all the Construction contractor store, huts, plant, tools and rubbish shall be removed and the site left clean and tidy. The space allocated by Owner shall be vacated and handed over to the Owner.

7.0 WORKING AND SAFETY REGULATIONS

7.1 The LSTK Contractor / Construction contractor shall observe all statutory safety and legal requirements regulations issued by Central and State Governments applicable to the work as well as any local regulations applicable to the site issue by the consultant or any other authority.

7.2 Particular attention is drawn to the following:

a) In case of accident, the Owner shall be informed in writing forthwith.
The LSTK Contractor / Construction contractor shall strictly follow regulations laid down by Factory Inspector,
Govt. and State authorities in this regard.
b) Construction contractor shall fence his plant, platforms, excavations etc.
c) Compliance with all electricity regulations.
d) Compliance with statutory requirements for inspection and test of all lifting appliances and auxiliary lifting gear.
e) Safety belts proposed to be used, shall be got checked by Fire & Safety Department of LSTK Contractor / OWNER in written before use.
f) Before using the lifting or pulling equipment, Construction contractor shall carryout load test which shall be witnessed by LSTK Contractor / OWNER.

7.3 Staircase, doors or gangways shall not be obstructed in any way that will interfere with means of access of escape.

7.4 No excavations will be started without the permission of the LSTK Contractor / OWNER, who will inform the Construction Contractor of the position of any pipes or cables known to be buried in the area. All excavations must be effectively railed off at all times, or completely boarded over properly marked during the hours of darkness by red warning lamps, using Flame proof warning lamps in non smoking areas. Debris or material which cannot be immediately removed must be heaped in such a way as to be immediately remove and also to leave adequate passage way. Any finds such as relics or antiques coins or fossils etc. shall be promptly handed over to the Owner.

7.5 The Construction contractor will notify the LSTK Contractor / Owner of his intention to bring on the site any equipment, such as, space heating or welding apparatus or any container holding liquid or gaseous fuel or other substance which might create a hazard. The Owner will have a right to prohibit the use of such equipment or to prescribe the conditions under which such equipment may be used. The LSTK Contractor will have the right to inspect any construction plant, and to forbid its use if in his opinion it is un-suitable or unsafe. No claim arising there from shall be made by the Construction Contractor.

The Construction contractor or any one acting on his instructions will not bring on to the site any radio active substance or any apparatus using such substances or any X ray apparatus until written permission and direction regarding the use of such equipment has been received from the Owner.

The LSTK contractor shall be responsible for the safe storage of the radio graphic sources or those of his Construction contractors.

7.6 The Construction Contractor will meet all requirements, and act on the instructions of the Owner where it is necessary to operate a permit to work system.

7.7 Where it is necessary to provide and/or store petroleum products or petroleum mixtures and explosive, the Construction contractor shall be responsible for carrying out such provision and/or storage in accordance with the rules and regulation laid down in Petroleum Act 1934, Explosive Act 1948 and Petroleum and Carbide of Calcium Manual Published by the Chief Inspector of Explosive of India. All such storage shall have prior approvals of the Consultant. In case any approval or clearance from Explosive or any statutory authorities is required, the contractor shall be responsible for obtaining the same.

7.8 The Construction contractor shall have his own Fire Fighting Extinguishers and Equipment.

7.9 The Construction contractor shall be responsible for the provision of all safety notices safety equipments including the safety gadgets for his workmen required by both the relevant legislation and such as the Owner may deem necessary.

7.10 While working at heights, safety belts shall necessarily be used.

7.11 Construction Contractor shall either employ a safety officer or shall designate one of his employees who will be responsible for implementing safety requirement contained in this document.

7.12 Construction Contractor shall use only steel planks and clamps executing scaffolding. Wooden planks and rope shall not be allowed for this purpose.

7.13 Construction Contractor shall use asbestos cloth to ensure falling of weld spatters down below during above ground welding to ensure safety of electrical cables and personnel and avoiding any fire hazards.

8.0 ELECTRICAL SAFETY REGULATIONS

8.1 In no circumstances will the Construction Contractor interfere with fuse and electrical equipment belonging to the owner or other contractors.

8.2 Before the Construction Contractor connects any electrical appliances to any plug or socket belonging to the other contractor or owner, he will -

i. Satisfy the Owner that the appliance is in good working condition.

ii. Uses of matching sixes plug & does not uses bare wire to insert in socket.

iii. Inform the Owner of the maximum current rating, voltage and phase of appliance.

iv. Obtain permission of the Owner dealing the sockets to which the appliance may be connected.

v. Use distribution board with ELCB for feeding power to hand held tools.

8.3 The Owner will not grant permission to plug in until he is satisfied that-

i. The appliance is in good condition and is fitted with a suitable plug.

ii. The appliance is fitted with a suitable cable having two earth conductors, one of which shall be earthed metal sheath surrounding the cores.

8.4 No electric cable in use by the other LSTK contractor/owner will be distributed without prior permission. No weight of any description be imposed on any such cable and no ladder or similar equipment will rest against or be attached to it. Cables / Wires used shall be in good condition without cuts & in insulation & joints.

8.5 The voltage for all portable equipment e.g. drilling machines, temporary lighting etc. will not exceed 240 volts.

8.6 No work must be carried out on any live equipment. The equipment must be made safe and a “permit to work” issued before any work is carried out.

8.7 Construction Contractor shall employ electrician to maintain his temporary electrical installation.

8.8 Take necessary clearance for working in hazardous area.

9.0 REPORTING

a) The Construction Contractor must report the following information to the LSTK Contractor / Owner in writing daily. Number of men employed, trades-wise,

- Progress achieved;
- Concrete pour card, if any.

b) If during excavation any materials such as but not limited to precious materials or treasure troves etc are found, the same shall be reported to owner immediately and shall be the property of owner.

10.0 GENERAL SAFETY REQUIREMENTS TO BE OBSERVED DURING SITE FABRICATION AND ERECTION BY THE CONSTRUCTION CONTRACTOR

1. Before starting the work, **Construction Contractor** should get safety work permit and should strictly follow instructions written by the concerned authority in work permit. Permit is required for all types of job i.e. Hot, Cold Excavation, Chipping, Grinding etc.

2. Smoking is strictly prohibited inside factory areas.

3. Safety appraisal and equipments shall be provided to workmen as per the nature of work. Welders shall use gloves, goggles, shields etc. during welding, gas cutting etc. All technicians shall use gloves, goggles during grinding, chipping etc. If any unsafe practice is observed Fire & Safety Sections or the authority issuing the work permit is authorized to stop the work without any prior notice.

4. Temporary fire extinguishers, water hose shall be available near work place and in case of fire, Owner's Fire & Safety Section should be immediately informed by Construction Contractor from nearest available telephone. Project Manager should also be immediately informed.

5. Construction Contractor shall secure necessary insurance of his workmen for the entire duration of works under the contract. Owner is not responsible for any accident/injury caused whatsoever, to any person employed by the Construction Contractor. However, Construction Contractor has to inform Owner's Fire & Safety Section about accident, if any, immediately.

6. Temporary switch boards, cables, wires and electrical equipments should be installed in accordance with standard electrical practice with proper earthing etc. and should have prior approval of LSTK Contractor / Owner electrical engineer. Switch board shall be suitably protected against rainwater. The cable used for welding machine should have flexible tough rubber sheathing.

7. Temporary cables and wires including welding cables should be routed as not to cluster the work areas. Also any possibility of damage to live wires

by falling objects should be avoided. Temporary electrical lines for power & lighting shall run overhead or underground so that they should not hinder the movement of men, materials and vehicles.

8. Portable hand lamps being used by construction crew shall be preferably of 24 Volts supply bulb to be protected with safety shields.

9. Earthing for welding shall not be taken through existing structure or equipments due to the very explosive nature of the plant, raw materials, reaction during process and final product. There is every possibility of fire and explosion in the equipment due to electric spark caused by loose earthing connection etc.

10. Construction Contractor should be careful while excavating so that no underground cable or pipe line is damaged. As soon as any brick cover or under ground cables are exposed he should stop the work and inform Construction Manager immediately for necessary action.

11. Construction Contractor should not leave any welding machine etc. running after the work is stopped. Before leaving the work place, Contractor should ensure that welding sets are disconnected from welding socket outlet.

12. All work areas shall be kept reasonably clear and clean for easy movement of men & material. Also all approach roads shall be free from obstacles for easy movement of cranes, vehicles, fork-lifts, trollies etc. and all debris shall be periodically removed.

13. All temporary structure and supports for erection purpose such as scaffolding, ladders, walkways, platform, shuttering etc. shall be sufficiently strong for safe use and to prevent collapse & accidental fall of workman. Same shall be removed immediately after the work is completed.

14. All workmen working at unsafe elevation during the construction activity such as concreting, plastering, welding, erection work, painting, insulation etc. shall be safe and sufficient passage and should be properly instructed to take necessary safety precautions and observe safe practice to prevent accidental fall. Safety belts and helmets shall be used wherever necessary.

15. All supervisors, welders, electricians, technicians, riggers, engaged in the work shall be adequately skilled, experienced and acquainted with standard rules, regulation & practices of the work.

16. All open trenches, pits and other excavation carried shall be barricaded out by Construction Contractor, to avoid accident.

17. All lifting tools, tackles & accessories shall be in good working condition and of suitable capacity for the purpose for which they are used. All certificates/permits/licenses etc. required under any law or regulation for the

same shall be available and valid during the entire period of the execution of the work under this WO/Contract.

18. Construction Contractor shall not use any structure or equipments erected or under erection for fastening, lifting or flying tackle guy-ropes etc. which may impose such loads for which structure or equipments are not designed to carry. However, Construction Contractor has to get prior approval from Construction Manager of LSTK /Owner before using beams, permanent structure for the above purpose.

19. When work is carried out at high elevations, it is the responsibility of the Construction Contractor to ensure that tools and materials are not left in a position where they can fall on peoples moving /working below. Where necessary, places below should be cordoned off and caution boards be provided by contractor. Also, Construction Contractor should not cut existing hand railing/structure.

20. Construction Contractor's men must not tamper with any machines, switches, valve or equipment not connected with their work. Welding holders should not be tested on running pipe lines.

21. Nylon rope should not be used for scaffolding where hot line is running near by, because there is every possibility of wire rope catching the fire. Also, no scaffolding is to be made on hot as well as insulated lines.

22. Necessary sign boards clearly indicating "RADIOGRAPHY HAZARDS" on all the four sides of the cordoned area surrounding radiography source will have to be displayed by Construction Contractor. Surrounding area will be cordoned with the help of manila rope and his personnel will be kept for watching/guard on all the four sides to prevent entry of personnel till the radiography work is completed. Construction Contractor's personnel should be able to communicate clearly/properly to stop entry of unauthorized personnel within the area cordoned for the radiography work.

Refuse Disposal

23. Refuse must be removed daily to prevent accumulation. Materials liable to cause persons to slip or trip and fall should be cleared immediately.

24. Refuse removal teams working after work hour should be organized where normal cleaning can not cope with the build up of waste materials.

25. Projecting nails should be removed or bent over.

Personal Protective Equipments

26. Helmets should be provided for all who are exposed to the dangers of falling material or structures they might strike against.

27. Suitable eye protection should be provided for all who are exposed to flying particles, harmful glare and dangerous substances.

28. In the handling of rough objects, gloves should be provided and used.

29. Safety footwear should be provided to all who are exposed to foot injury, should be good fitting and comfortable to wear.

30. Safety belts should be provided where other means are not practicable. Both the anchorage points and lifelines provided for attaching safety belts should be of adequate strength. The umbilical line should be fixed in such a way that user's freefall will not exceed 1 metre.

31. Catch net should be used where persons are liable to fall and these should be securely supported at a level as near as possible to the working level.

32. Noise defenders should be provided for work area where the noise level exceeds 85 dBA.

33. Respiratory protection should be provided by employers and used by workers where the dust level remains high and where control at source is not practicable.

Inspection & Record Keeping

34. Where defects render the scaffolds unsafe, they should be rectified immediately. Where this is not practicable, a sign should be put warning against using it.

Winches

35. Adequate foundations should be provided for winches.

Lifting Gear

36. All lifting gear and slinging should be tested before use and thereafter inspected regularly by competent engineers. Workers should also check the lifting gear visually before using them.

37. Each piece of lifting gear should bear its safe working load, its identification number and its last inspection date. It could in addition be colour coded according to due date of inspection.

38. Wire ropes should be preserved against rusting, kinking, fraying, birdcaging and heat damage. Defective wires should be destroyed to prevent recycling.

Concrete Mixers

39. Moving parts which are liable to become nip points, such as gears, chains and rollers should be guarded.

40. Where concrete mixers are driven by internal combustion engineers, exhaust points should be located away from the workers' work station so as to eliminate their exposure to obnoxious fumes.

Electrical Components

41. All components and conductors used must be in good condition.

42. Proper junction boxes and distribution boards from which electric power could be tapped should be provided at every floor level.

Demolition: General Provisions

43. Uncontrolled collapse of walls or other structures under demolition should be prevented.

44. The throwing of materials over the sides of the buildings should not be permitted.

Waste Handling

45. Where demolition is carried out near public areas :

a) Hoardings slopping inwards should be erected around the building.
b) Protective nettings should be hung around the building to prevent materials falling outside the periphery shelter
c) asbestos

Where asbestos materials are present, appropriate dust control and respiratory protection approved by the local authority must be used.

Excavation : General Provisions

46. Test for toxic gases should be carried out where their presence is suspected.

47. Exposure of shorings to vibration such as that produced by engines or vehicular traffic should be kept to a minimum.

General – Ventilation, Fire Protection/Fighting

48. Where flammable gas concentration could reach explosive levels, it may be necessary to provide intrinsically safe electrical equipments.

49. Adequate lighting and emergency lighting should be provided.

50. Adequate evacuation stairways should be provided for rapid evacuation in case of an emergency.

First Aid

51. Sufficient First Aid Boxes containing simple dressings and supplies should be provided on the site under the control of the foreman.

Pipe line diameter shown is not to scale, but to only signify pipe routing

actual routing and diameter may vary during detailed engineering

TOTAL LENGTH OF RAW EFFLUENT PIPE LINE= 1.68KM

TOTAL LENGTH OF TREATED WATER PIPE LINE =1.68KM

TOTAL LENGTH OF SEWAGE PIPE LINE = 1.64 KM

North

W E S

ORIGINAL SIZE:- A0

SCALE:- 1:1000 (1CM = 10.0M)

DRAWING NO. | REV. 0

LEGEND:-

SYMBOL	DESCRIPTION
	SITE BOUNDARY LINE
	COMPOUND WALL
	RAW EFFLUENT PIPE LINE
	TREATED EFFLT. WATER PIPE LINE
	EXISTING SEWAGE PIPE LINE
	POWER POLE
	TELEPHONE POLE
	MAN HOLE
	MANGO TREE
	NEEM TREE
	TREE
	PALM TREE
	SPOT LEVEL
	COMPOUND WALL HEIGHT

AREA DETAILS:-

DESCRIPTION	SQ.MT	ACRES
TOTAL SITE AREA	6243.506	1.543
TOTAL ROAD LENGTH	1966 Meters	

NOTES:-

1. All Dimensions Are In Meters.
2. Surveyed On 1st March 2016.
3. BM=10.000m Marked on culvert top. (Site Western side)
4. TBM-1 Marked on Pump House Wall Near Baxter India (p) Ltd., Value= 12.490m.
5. TBM-2 Marked on High-Mast Pillar Near Eur Kem Laboratories (p)Ltd., Value= 14.324m.
6. Survey Areas Shown by your site Person. Mr.Rajesh, Mob: 9884195557.
7. Grid Interval 100m.

TITLE :-

INDICATIVE PIPE ROUTING MAP OF proposed C.E.T.P. SIDCO INDUSTRIAL ESTATE, ALATHUR VILLAGE, THURUPORUR TALUK, KANCHEEPURAM DISTRICT.

SURVEYED BY:

APEX TOPOMAPPERS PVT. LTD.

TOPOMAPPING AND ENGINEERING SURVEYING

Regd.Off: NEW Nuclei-14 (OLD No.44-46), 1st Cross Street, 3rd Main Road, Anna Nagar, Chennai 600 040.

Tel : 26216182
Telefax : 26202853
Email : [illegible]

REV	DATE	DESCRIPTION	PPD.	CKD.	APPD.
P	23.11.16	ISSUED FOR TENDER			

CHENNAI PHARMA INDUSTRIAL INFRASTRUCTURE UPGRADATION COMPANY

CPIIUC

REV P

SHEET 1 OF 1

SHEET: A1

PROJECT: COMMON EFFLUENT TREATMENT FACILITY AT SIDDCO COMPLEX, ALATHUR

SCALE :

TITLE: INDICATIVE ROUTE PLAN

DRG. NO. PC0094-7615-0001

FILE:

PDIL

PROJECTS & DEVELOPMENT INDIA LTD. NOIDA

THIS DRAWING IS THE PROPERTY OF PROJECTS & DEVELOPMENT INDIA LIMITED AND NOT TO BE COPIED OR REPRODUCED OR SHOWN TO THIRD PARTIES WITHOUT THE WRITTEN PERMISSION OF P.D.I.L.

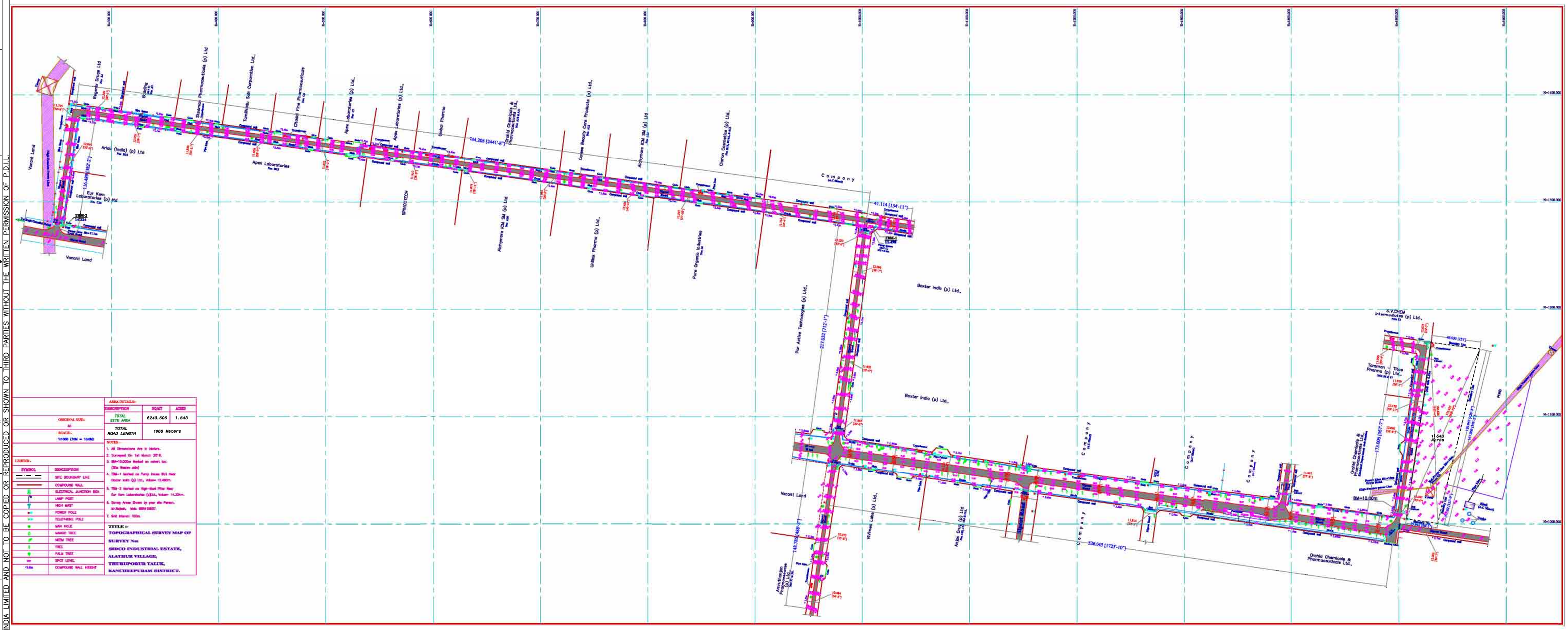

AREA DETAILS:-		
DESCRIPTION	SQ.MT	ACRES
TOTAL SITE AREA	6243.506	1.543
TOTAL ROAD LENGTH	1966 Meters	

ORIGINAL SIZE:- A1

SCALE:- 1:1000 (10M = 10.0M)

LEGEND:-

SYMBOL	DESCRIPTION
	SITE BOUNDARY LINE
	COMPOUND WALL
	ELECTRICAL JUNCTION BOX
	LAMP POST
	HIGH MAST
	POWER POLE
	TELEPHONE POLE
	MAN HOLE
	MANGO TREE
	NEEM TREE
	TREE
	PALM TREE
	SPOT LEVEL
*Line	COMPOUND WALL HEIGHT

NOTES:-

1. All Dimensions Are in Meters.
2. Surveyed On 1st March 2016.
3. BM=10.00m Marked on cement top. (Site Western side)
4. TBM-1 Marked on Pump House Wall near Boxter India (p) Ltd., Value= 13.400m
5. TBM-2 Marked on High-Mast Pillar Near Eur Kern Laboratories (p)Ltd., Value= 14.254m.
6. Survey Areas Shown by your site Person. Sri.Rajesh, Mob. 8884126557.
7. Grid Interval 100m.

TITLE :-
TOPOGRAPHICAL SURVEY MAP OF SURVEY Nos
SIDCO INDUSTRIAL ESTATE,
ALATHUR VILLAGE,
THURUPORUR TALUK,
SANCHEEPURAM DISTRICT.

REV	DATE	DESCRIPTION	PPD.	CKD.	APPD.
P	23.11.16	ISSUED FOR TENDER			

CHENNAI PHARMA INDUSTRIAL INFRASTRUCTURE UPGRADATION COMPANY

CPIIUC

REV P

SHEET 1 OF 1

SHEET: A1

PROJECT:
COMMON EFFLUENT TREATMENT FACILITY AT SIDCO COMPLEX, ALATHUR

TITLE:
LAYOUT FOR TOPOGRAPHICAL SURVEY

DRG. NO.

FILE:

पी डी आई एल PDIL

PROJECTS & DEVELOPMENT INDIA LTD. NOIDA

THIS DRAWING IS THE PROPERTY OF PROJECTS & DEVELOPMENT INDIA LIMITED AND NOT TO BE COPIED OR REPRODUCED OR SHOWN TO THIRD PARTIES WITHOUT THE WRITTEN PERMISSION OF P.D.I.L.

THIS DRAWING IS THE PROPERTY OF PROJECTS & DEVELOPMENT INDIA LIMITED AND NOT TO BE COPIED OR REPRODUCED OR SHOWN TO THIRD PARTIES WITHOUT THE WRITTEN PERMISSION OF P.D.I.L.

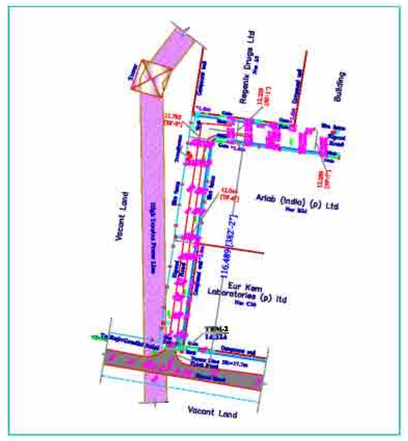

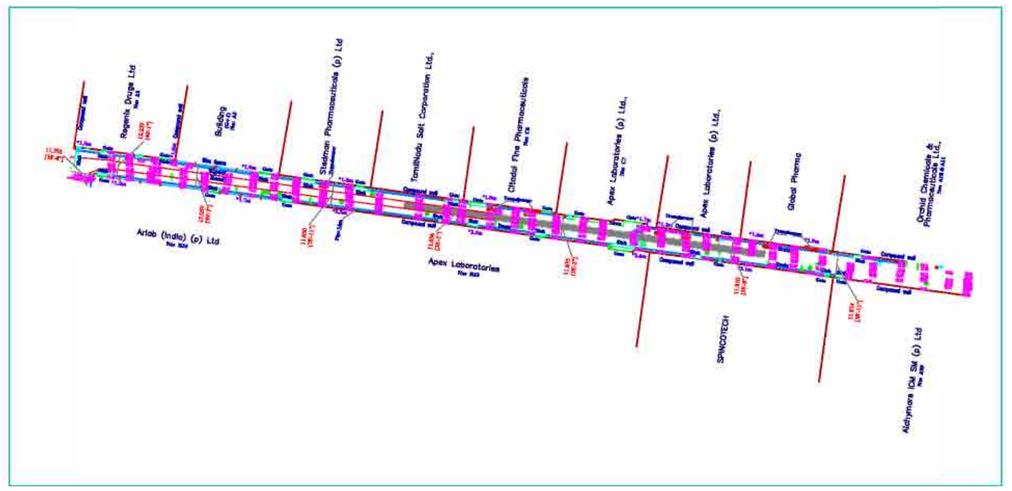

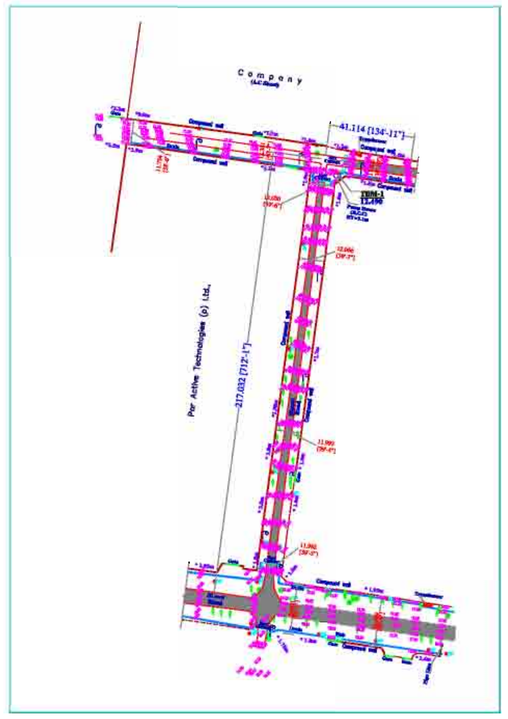

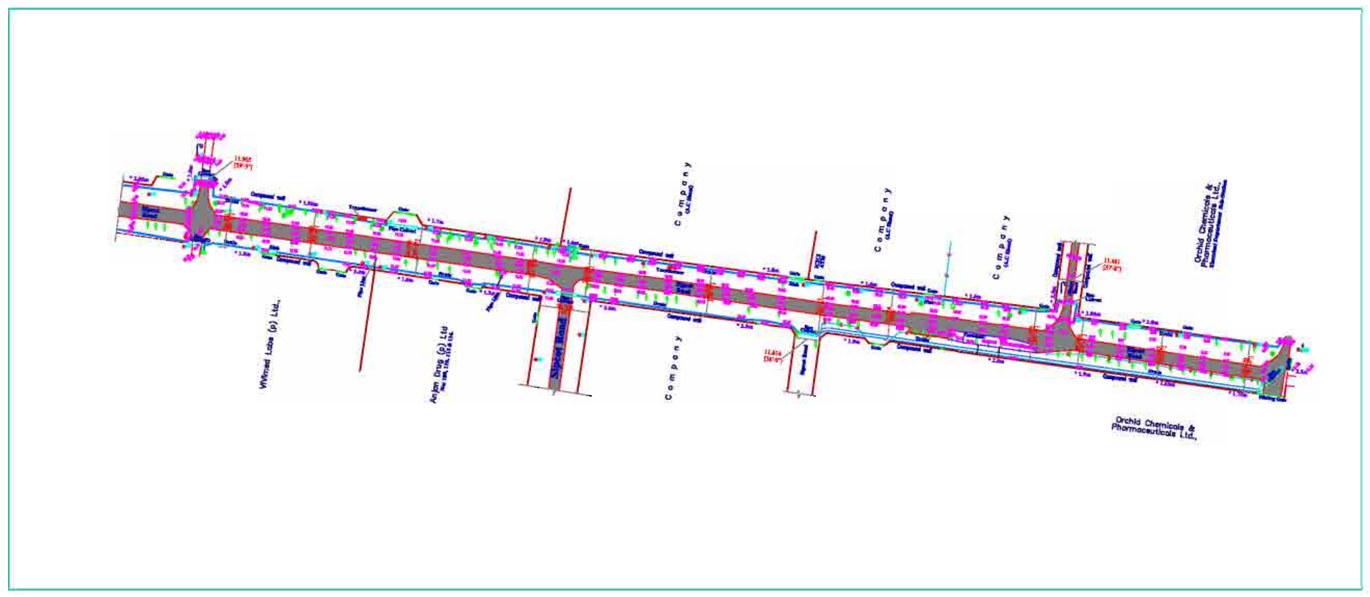

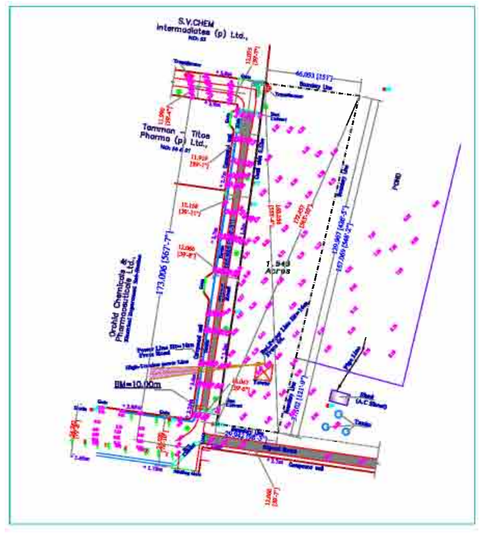

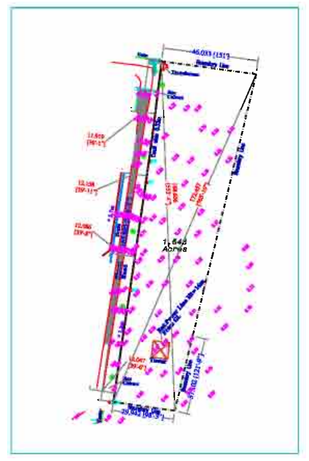

P	23.11.16	ISSUED FOR TENDER			
REV	DATE	DESCRIPTION	PPD.	CKD.	APPD.

CHENNAI PHARMA INDUSTRIAL INFRASTRUCTURE UPGRADATION COMPANY

REV P
SHEET 1 OF 1
SHEET: A1

PROJECT:
COMMON EFFLUENT TREATMENT FACILITY AT SIDCO COMPLEX, ALATHUR

TITLE:
LAYOUT FOR TOPOGRAPHICAL SURVEY

DRG. NO.

FILE:

PROJECTS & DEVELOPMENT INDIA LTD.
NOIDA

THIS DRAWING IS THE PROPERTY OF PROJECTS & DEVELOPMENT INDIA LIMITED AND NOT TO BE COPIED OR REPRODUCED OR SHOWN TO THIRD PARTIES WITHOUT THE WRITTEN PERMISSION OF P.D.I.L.

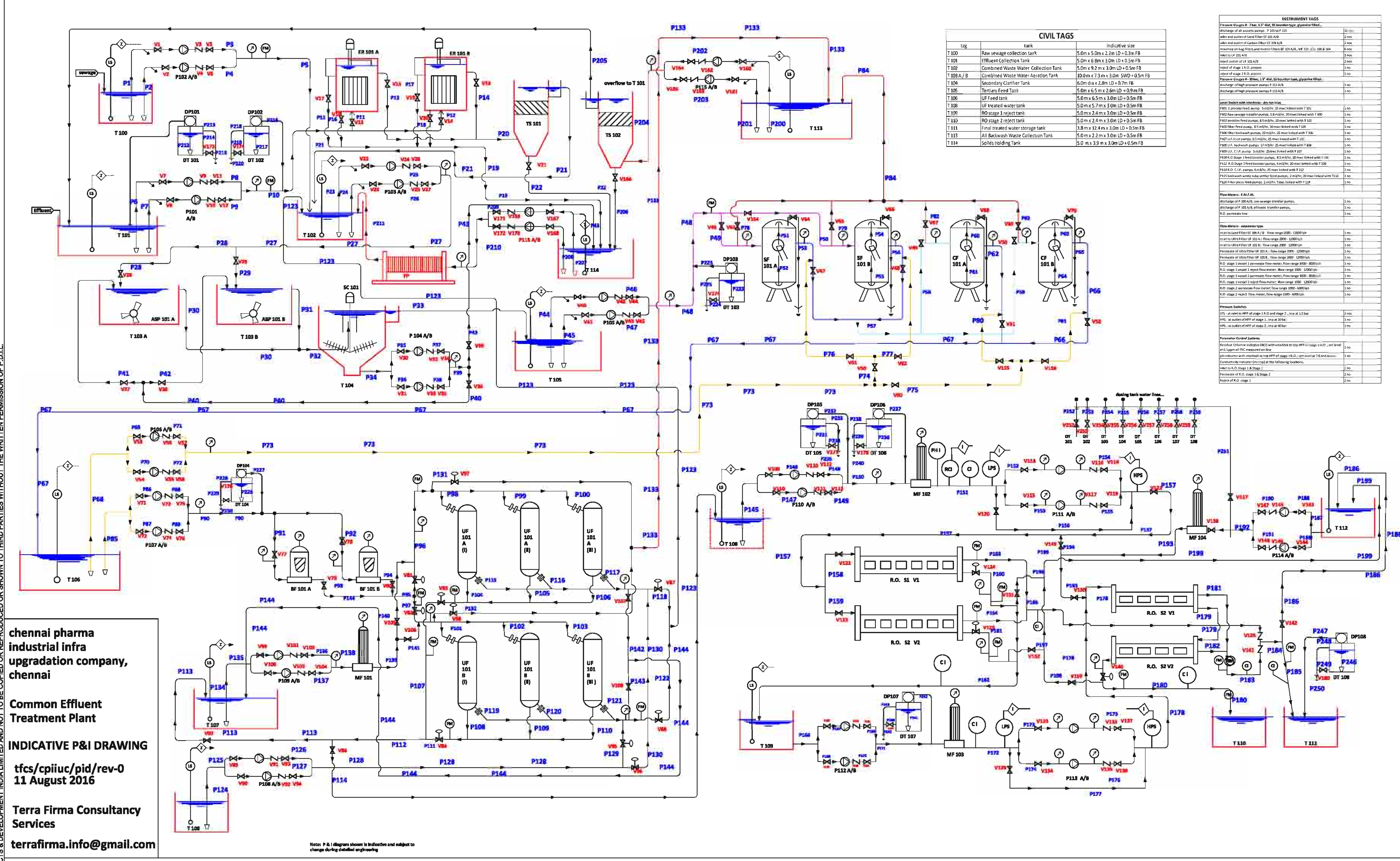

chennai pharma industrial infra upgradation company, chennai

Common Effluent Treatment Plant

INDICATIVE P&I DRAWING

tfcs/cpiiuc/pid/rev-0
11 August 2016

Terra Firma Consultancy Services

terrafirma.info@gmail.com

Note: P & I diagram shown is indicative and subject to change during detailed engineering

CIVIL TAGS

tag	tank	indicative size
T 100	Raw sewage collection tank	5.0m x 5.0m x 2.2m LD + 0.3m FB
T 101	Effluent Collection Tank	5.0m x 6.8m x 3.0m LD + 0.5m FB
T 102	Combined Waste Water Collection Tank	5.0m x 9.2m x 3.0m LD + 0.5m FB
T 103 A / B	Combined Waste Water Aeration Tank	10.0m x 7.3m x 3.0m SWD + 0.5m FB
T 104	Secondary Clarifier Tank	6.0m dia x 2.8m LD + 0.7m FB
T 105	Tertiary Feed Tank	5.0m x 6.5m x 2.6m LD + 0.9m FB
T 106	UF Feed tank	5.0m x 6.5m x 3.0m LD + 0.5m FB
T 108	UF treated water tank	5.0m x 5.7m x 3.0m LD + 0.5m FB
T 109	RO stage 1 reject tank	5.0m x 2.4m x 3.0m LD + 0.5m FB
T 110	RO stage 2 reject tank	5.0m x 2.4m x 3.0m LD + 0.5m FB
T 111	Final treated water storage tank	3.8m x 12.4m x 3.0m LD + 0.5m FB
T 113	All Backwash Waste Collection Tank	5.0m x 2.2m x 3.0m LD + 0.5m FB
T 114	Solids Holding Tank	5.0 m x 3.9 m x 3.0m LD + 0.5m FB

EQUIPMENT TAGS

ITEM	QTY
P101 E process feed pump, 5 m3/hr, 15 mwc	3 nos
P102 Raw sewage transfer pumps, 5.8 m3/hr, 20 mwc	2 nos
P103 aeration feed pumps, 8.5 m3/hr, 20 mwc	3 nos
P104 return sludge pumps, 6 m3/hr, 15 mwc	3 nos
P105 filter feed pump, 8.5 m3/hr, 30 mwc	3 nos
P106 filter backwash pumps, 20 m3/hr, 25 mwc	3 nos
P107 U.F feed pumps, 8.5 m3/hr, 25 mwc	3 nos
P108 U.F. backwash pumps, 17 m3/hr, 25 mwc	3 nos
P109 U.F C.I.P pump, 5 m3/hr, 25mwc	2 nos
P110 R.O.Stage 1 feed booster pumps, 8.5 m3/hr, 20 mwc	3 nos
P111 R.O Stage 1 high pressure pump, 8.5 m3/hr, 15 bar (150 mwc)	3 nos
P112 R.O.Stage 2 feed booster pumps, 6 m3/hr, 20 mwc	3 nos
P113 R.O Stage 2 high pressure pump, 6 m3/hr, 25 bar (250 mwc)	2 nos
P114 R.O. C.I.P pumps, 6 m3/hr, 25 mwc	2 nos
P115 backwash waste tube settler feed pumps, 2 m3/hr, 20 mwc	2 nos
DT 101 pH correction dosing tank of 100 liters capacity	1 nos
DT 102 alum dosing tank of 100 liters capacity	1 nos
DT 103 hypo dosing tank of 200 liters capacity	1 nos
DT 104 UF alum dosing tank of 100 liters capacity	1 nos
DT 105 R.O stage 1 SMBS dosing tank of 100 liters capacity	1 nos
DT 106 R.O Antiscalant dosing tank of 100 liters capacity	1 nos
DT 107 R.O stage 2 feed pH booster tank of 100 liters capacity	1 nos
DT 108 R.O permeate pH dosing tank of 100 liters capacity	1 nos
DP 101 pH correction dosing pump , 0 - 6 lph range, 2.0 KSC pressure	1 nos
DP 102 alum dosing pump , 0 - 6 lph range, 2.0 KSC pressure	1 nos
DP 103 hypo dosing pump , 0 - 10 lph range, 2.0 KSC pressure	1 nos
[illegible]	1 nos
DP 105 R.O stage 1 SMBS dosing pump , 0 - 6 lph range, 2.5 KSC pressure	1 nos
DP 106 R.O Antiscalant dosing pump , 0 - 3 lph range, 2.5 KSC pressure	1 nos
DP 107 R.O stage 2 feed pH booster dosing pump , 0 - 6 lph range, 2.5 KSC pressure	1 nos
DP 108 R.O. permeate pump , 0 - 6 lph range, 2.5 KSC pressure	1 nos
ER 101 E Process Reactor for flow rate of 5 m3/hr at feed	2 nos
TS 101 3.3m x 1.7m x 2.6m LD + 0.4m FB	1 no
TS 102 2.0m x 1.0m x 2.6m LD + 0.4m FB	1 no
ASP 101 A/B 5 hp aspirating aerator	2 nos
SC 101 secondary clarifier mechanism to suit 6.0m dia x 2.8m approx TD	1 no
SF 101 A / B Sand Filter complete with all accessories	2 nos
CF 101 A/ B Carbon Filter model 3672 complete with all accessories	2 nos
Bag filter, 8.5 m3/hr, PP bag, SS housing, 20 microns rating	2 nos
MF 101 Ultra Filter C.I.P. system filter, 40" long x 2 nos, 25 micron rating	1 no
MF 102 R.O. stage 1 micron filter, 40" long x 4 nos, 10 micron rating	1 no
[illegible]	1 no
MF 104 R.O. C.I.P. system filter, 30" long x 3 nos, 25 micron rating	1 no
UF 101 A/B, 8.5 m3/hr each, 3 units / stream	6
PV 101 [illegible]	[illegible]
PV [illegible]	[illegible]
Brack[illegible]	[illegible]
Sea Water membranes	10[illegible]
T 107 U.F CIP tank of 2,000 liters capacity	1 no
T 112 R.O CIP tank of 2,500 liters capacity	1 no
P 116 Filter Press Feed Pump, 2.0 m3/hr, 5 bar operating pressure with all accessories and fittings	2 nos
FP 101 Filter Press, 2,000 lph feed flow rate, 4 bar operating pressure with all accessories and fittings	2 nos

INSTRUMENT TAGS

[illegible]	
[illegible]	16 nos
Inlet and outlet of Sand Filter SF 101 A/B	2 nos
inlet and outlet of Carbon Filter CF 101 A/B	2 nos
mounted on bag filters and micron filters BF 101 A/B , MF 101, 102, 103 & 104	6 nos
inlet to UF 101 A/B	2 nos
reject outlet of UF 101 A/B	2 nos
reject of stage 1 R.O. process	1 no
reject of stage 2 R.O. process	1 no
Pressure Gauges 0 - 30 bar, 1.5" dial, SS bourdon type, glycerine filled..	
discharge of high pressure pumps P 111 A/B	1 no
discharge of high pressure pumps P 113 A/B	1 no
Level Switch with Interlocks - dry run trips	
P101 E process feed pump, 5 m3/hr, 15 mwc linked with T 101	1 no
P102 Raw sewage transfer pumps, 5.8 m3/hr, 20 mwc linked with T 100	1 no
P103 aeration feed pumps, 8.5 m3/hr, 20 mwc linked with T 102	1 no
[illegible]	[illegible]
[illegible]	[illegible]
[illegible]	[illegible]
P108 U.F backwash pumps, 17 m3/hr, 25 mwc linked with T 108	1 no
P109 U.F. C.I.P. pump, 5 m3/hr, 25mwc linked with T 107	1 no
P110 R.O.Stage 1 feed booster pumps, 8.5 m3/hr, 20 mwc linked with T 108	1 no
P112 R.O.Stage 2 feed booster pumps, 6 m3/hr, 20 mwc linked with T 109	1 no
P114 R.O. C.I.P pumps, 6 m3/hr, 25 mwc linked with T 112	1 no
P115 backwash waste tube settler feed pumps. 2 m3/hr, 20 mwc linked with T113	1 no
P116 Filter press feed pumps, 2 m3/hr, 5 bar, linked with T 114	1 no
Flow Meters - E.M.F.M.	
discharge of P 100 A/B, raw sewage transfer pumps,	1 no
discharge of P 101 A/B, effluent transfer pumps	1 no
R.O permeate line	1 no
Flow Meters - rotameter type	
Inlet to Sand Filter SF 101 A / B , flow range 2000 - 12000 lph	1 no
Inlet to Ultra Filter UF 101 A ; flow range 2000 - 12000 lph	1 no
Inlet to Ultra Filter UF 101 B ; flow range 2000 - 12000 lph	1 no
Permeate of Ultra Filter UF 101 A ; flow range 2000 - 12000 lph	1 no
Permeate of Ultra Filter UF 101 B , flow range 2000 - 12000 lph	1 no
R.O stage 1 vessel 1 permeate flow meter, flow range 1000 - 8000 lph	1 no
R.O stage 1 vessel 1 reject flow meter; flow range 1000 - 12000 lph	1 no
R.O stage 1 vessel 2 permeate flow meter, flow range 1000 - 8000 lph	1 no
R.O stage 1 vessel 2 reject flow meter, flow range 1000 - 12000 lph	1 no
R.O stage 2 permeate flow meter, flow range 1000 - 6000 lph	1 no
R.O stage 2 reject flow meter flow range 1000 - 6000 lph	1 no
Pressure Switches	
LPS - at inlet to HPP of stage 1 R.O and stage 2 , trip at 1.5 bar	2 nos
HPS - at outlet of HPP of stage 1 ; trip at 30 bar	1 no
HPS - at outlet of HPP of stage 2 , trip at 40 bar	1 no
Parameter Control Systems	
Residual Chlorine Indicator (RCI) with interlock to trip HPP of stage 1 R.O. , set level at 0.1 ppm of FRC measured on line	1 no
pH Indicator with interlock to trip HPP of stage 1 R.O ; set level at 7.6 and above	1 no
Conductivity Indicator (no trip) at the following locations	
Inlet to R.O. Stage 1 & Stage 2	2 no
Permeate of R.O. stage 1 & Stage 2	2 no
Reject of R.O. stage 1	2 no

P	23.11.16	ISSUED FOR TENDER			
REV	DATE	DESCRIPTION	PPD.	CKD.	APPD.

CPIIUC — CHENNAI PHARMA INDUSTRIAL INFRASTRUCTURE UPGRADATION COMPANY

REV | SHEET 1 OF 1 | SHEET: A0

PROJECT: COMMON EFFLUENT TREATMENT FACILITY AT SIDCO COMPLEX, ALATHUR

TITLE: P&I DIAGRAM

DRG. NO. ANNEXTURE I

पी डी आई एल PDIL — PROJECTS & DEVELOPMENT INDIA LTD. NOIDA

THIS DRAWING IS THE PROPERTY OF PROJECTS & DEVELOPMENT INDIA LIMITED AND NOT TO BE COPIED OR REPRODUCED OR SHOWN TO THIRD PARTIES WITHOUT THE WRITTEN PERMISSION OF P.D.I.L.

chennai pharma industrial infra upgradation company, chennai

Common Effluent Treatment Plant

INDICATIVE P&I DRAWING

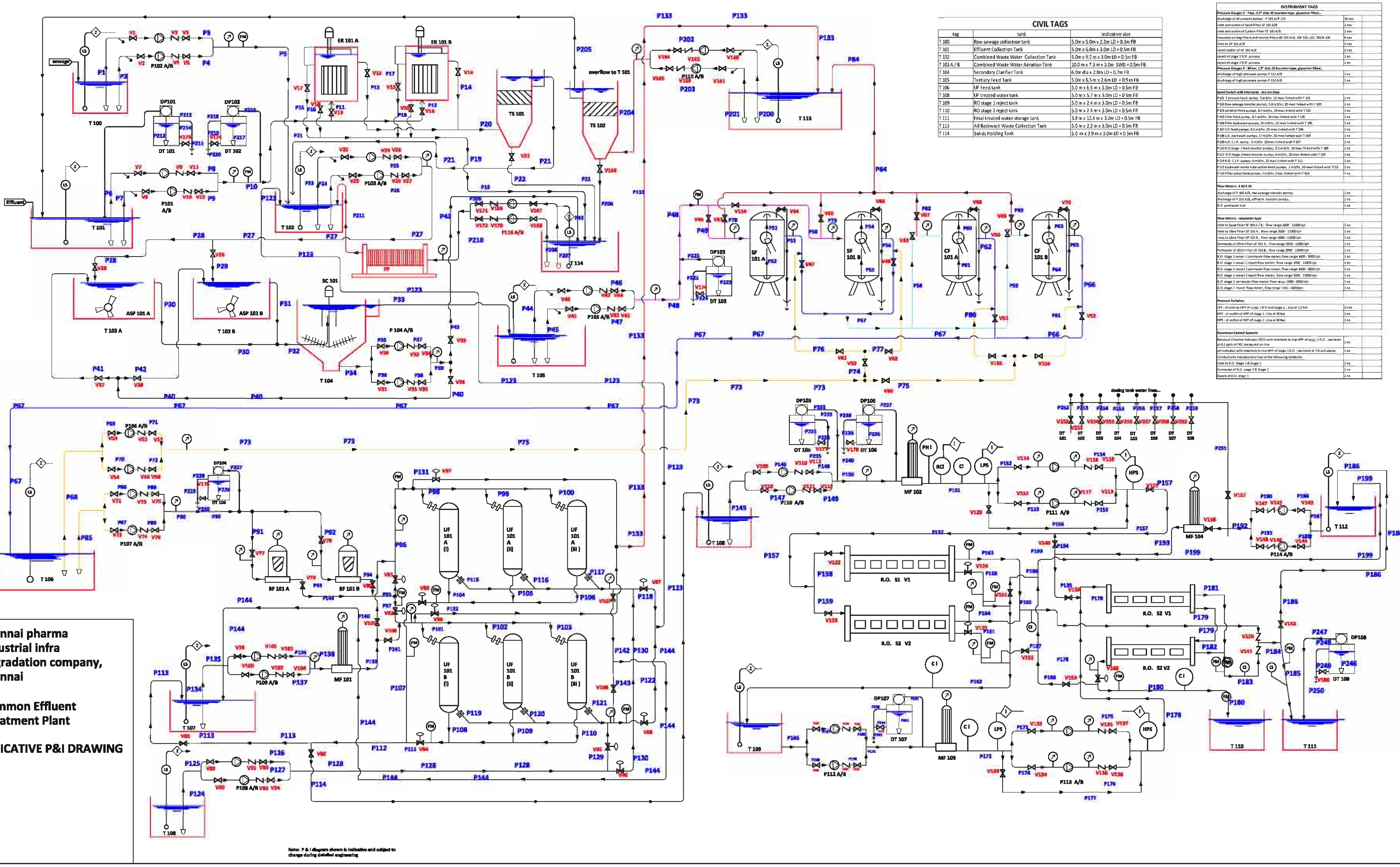

CIVIL TAGS

tag	tank	indicative size
T 100	Raw sewage collection tank	5.0m x 5.0m x 2.2m LD + 0.3m FB
T 101	Effluent Collection Tank	5.0m x 6.8m x 3.0m LD + 0.5m FB
T 102	Combined Waste Water Collection Tank	5.0m x 9.2 m x 3.0m LD + 0.5m FB
T 103 A / B	Combined Waste Water Aeration Tank	10.0 m x 7.3 m x 3.0m SWD + 0.5m FB
T 104	Secondary Clarifier Tank	6.0m dia x 2.8m LD + 0.7m FB
T 105	Tertiary Feed Tank	5.0m x 6.5 m x 2.6m LD + 0.9 m FB
T 106	UF Feed tank	5.0 m x 6.5 m x 3.0m LD + 0.5m FB
T 108	UF treated water tank	5.0 m x 5.7 m x 3.0m LD + 0.5m FB
T 109	RO stage 1 reject tank	5.0 m x 2.4 m x 3.0m LD + 0.5m FB
T 110	RO stage 2 reject tank	5.0 m x 2.4 m x 3.0m LD + 0.5m FB
T 111	Final treated water storage tank	3.8 m x 12.4 m x 3.0m LD + 0.5m FB
T 113	All Backwash Waste Collection Tank	5.0 m x 2.2 m x 3.0m LD + 0.5m FB
T 114	Solids Holding Tank	5.0 m x 3.9 m x 3.0m LD + 0.5m FB

INSTRUMENT TAGS

Pressure Gauges 0 - 7 bar, 1.5" dial, SS bourdon type, glycerine filled...	
discharge of all process pumps - P 101 to P 115	16 nos
inlet and outlet of Sand Filter SF 101 A/B	2 nos
inlet and outlet of Carbon Filter CF 101 A/B	2 nos
mounted on bag filters and micron filters BF 101 A/B, MF 101, 102, 103 & 104	6 nos
inlet to UF 101 A/B	2 nos
reject outlet of UF 101 A/B	2 nos
reject of stage 1 R.O. process	1 no
reject of stage 2 R.O. process	1 no
discharge of high pressure pumps P 112 A/B	1 no
Pressure Gauges 0 - 30 bar, 1.5" dial, SS bourdon type, glycerine filled...	
discharge of high pressure pumps P 111 A/B	1 no
discharge of high pressure pumps P 113 A/B	1 no
Level Switch with Interlocks - dry run trips	
P101 E process feed pump, 5 m3/hr, 15 mwc linked with T 101	1 no
P102 Raw sewage transfer pumps, 5.8 m3/hr, 20 mwc linked with T 100	1 no
P103 aeration feed pumps, 8.5 m3/hr, 20 mwc linked with T 102	1 no
P105 filter feed pump, 8.5 m3/hr, 30 mwc linked with T 105	1 no
P106 filter backwash pumps, 20 m3/hr, 25 mwc linked with T 106	1 no
P107 U.F feed pumps, 8.5 m3/hr, 25 mwc linked with T 106	1 no
P108 U.F. backwash pumps, 17 m3/hr, 25 mwc linked with T 108	1 no
P109 U.F. C.I.P. pump, 5 m3/hr, 25mwc linked with T 107	1 no
P110 R.O.Stage 1 feed booster pumps, 8.5 m3/hr, 20 mwc linked with T 108	1 no
P112 R.O.Stage 2 feed booster pumps, 6 m3/hr, 20 mwc linked with T 109	1 no
P114 R.O. C.I.P. pumps, 6 m3/hr, 25 mwc linked with T 112	1 no
P115 backwash waste tube settler feed pumps, 2 m3/hr, 20 mwc linked with T 113	1 no
P116 Filter press feed pumps, 2 m3/hr, 5 bar, linked with T 114	1 no
Flow Meters - E.M.F.M.	
discharge of P 100 A/B, raw sewage transfer pumps	1 no
discharge of P 101 A/B, effluent transfer pumps	1 no
R.O. permeate line	1 no
Flow Meters - rotameter type	
Inlet to Sand Filter SF 101 A / B ; flow range 2000 - 12000 lph	1 no
Inlet to Ultra Filter UF 101 A ; flow range 2000 - 12000 lph	1 no
Inlet to Ultra Filter UF 101 B ; flow range 2000 - 12000 lph	1 no
Permeate of Ultra Filter UF 101 A ; flow range 2000 - 12000 lph	1 no
Permeate of Ultra Filter UF 101 B ; flow range 2000 - 12000 lph	1 no
R.O. stage 1 vessel 1 permeate flow meter, flow range 1000 - 8000 lph	1 no
R.O. stage 1 vessel 1 reject flow meter, flow range 1000 - 12000 lph	1 no
R.O. stage 1 vessel 2 permeate flow meter, flow range 1000 - 8000 lph	1 no
R.O. stage 1 vessel 2 reject flow meter, flow range 1000 - 12000 lph	1 no
R.O. stage 2 permeate flow meter, flow range 1000 - 6000 lph	1 no
R.O. stage 2 reject flow meter, flow range 1000 - 6000 lph	1 no
Pressure Switches	
LPS - at inlet to HPP of stage 1 R.O and stage 2 ; trip at 1.5 bar	2 nos
HPS - at outlet of HPP of stage 1 ; trip at 30 bar	1 no
HPS - at outlet of HPP of stage 2 ; trip at 40 bar	1 no
Parameter Control Systems	
Residual Chlorine Indicator (RCI) with Interlock to trip HPP of stage 1 R.O. ; set level at 0.1 ppm of FRC measured on line	1 no
pH Indicator with interlock to trip HPP of stage 1 R.O. ; set level at 7.6 and above	1 no
Conductivity Indicator (no trip) at the following locations	
Inlet to R.O. Stage 1 & Stage 2	2 no
Permeate of R.O. stage 1 & Stage 2	2 no
Reject of R.O. stage 1	2 no

EQUIPMENT TAGS

ITEM	QTY
P101 E process feed pump, 5 m3/hr, 15 mwc	3 nos
P102 Raw sewage transfer pumps, 5.8 m3/hr, 20 mwc	2 nos
P103 aeration feed pumps, 8.5 m3/hr, 20 mwc	3 nos
P104 return sludge pumps, 6 m3/hr, 15 mwc	3 nos
P105 filter feed pump, 8.5 m3/hr, 30 mwc	3 nos
P106 filter backwash pumps, 20 m3/hr, 25 mwc	3 nos
P107 U.F feed pumps, 8.5 m3/hr 25 mwc	3 nos
P108 U.F. backwash pumps, 17 m3/hr, 25 mwc	3 nos
P109 U.F C.I.P pump, 5 m3/hr, 25mwc	2 nos
P110 R.O.Stage 1 feed booster pumps, 8.5 m3/hr, 20 mwc	3 nos
P111 R.O Stage 1 high pressure pump, 8.5 m3/hr, 15 bar (150 mwc)	3 nos
P112 R.O.Stage 2 feed booster pumps, 6 m3/hr, 20 mwc	3 nos
P113 R.O. Stage 2 high pressure pump, 6 m3/hr, 25 bar (250 mwc)	2 nos
P114 R.O. C.I.P. pumps, 6 m3/hr, 25 mwc	2 nos
P115 backwash waste tube settler feed pumps, 2 m3/hr, 20 mwc	2 nos
DT 101 pH correction dosing tank of 100 liters capacity	1 nos
DT 102 alum dosing tank of 100 liters capacity	1 nos
DT 103 hypo dosing tank of 200 liters capacity	1 nos
DT 104 UF alum dosing tank of 100 liters capacity	1 nos
DT 105 R.O stage 1 SMBS dosing tank of 100 liters capacity	1 nos
DT 106 R.O Antiscalant dosing tank of 100 liters capacity	1 nos
DT 107 R.O stage 2 feed pH booster tank of 100 liters capacity	1 nos
DT 108 R.O. permeate pH dosing tank of 100 liters capacity	1 nos
DP 101 pH correction dosing pump , 0 - 6 lph range, 2.0 KSC pressure	1 nos
DP 102 alum dosing pump , 0 - 6 lph range, 2.0 KSC pressure	1 nos
DP 103 hypo dosing pump , 0 - 10 lph range, 2.0 KSC pressure	1 nos
DP 104 UF alum dosing pump , 0 - 6 lph range, 2.5 KSC pressure	1 nos
DP 105 [illegible]	[illegible]
DP 106 R.O. Antiscalant dosing pump , 0 - 3 lph range, 2.5 KSC pressure	1 nos
DP 107 [illegible] , 0 - 6 lph range, 2.5 KSC pressure	1 nos
DP 108 R.O permeate pump , 0 - 6 lph range, 2.5 KSC pressure	1 nos
ER 101 E Process Reactor for flow rate of 5 m3/hr at feed	2 nos
TS 101 3.3m x 1.7m x 2.6m LD + 0.4m FB	1 no
TS 102 2.0m x 1.0m x 2.6m LD + 0.4m FB	1 no
ASP 101 A/B 5 hp aspirating aerator	2 nos
SC 101 secondary clarifier mechanism to suit 6.0m dia x 2.8m approx TD	1 no.
SF 101 A / B Sand Filter complete with all accessories	2 nos
CF 101 A/ B Carbon Filter model 3672 complete with all accessories	2 nos
Bag [illegible]	[illegible]
MF 101 Ultra Filter C.I.P system filter, 40" long x 2 nos, 25 micron rating	1 no
MF 102 R.O stage 1 micron filter, 40" long x 4 nos, 10 micron rating	1 no
MF 103 R.O stage 2 micron filter, 30" long x 2 nos, 10 micron rating	1 no
MF 104 R.O C.I.P system filter, 30" long x 3 nos, 25 micron rating	1 no
UF 101 A/B, 8.5m3/hr each, 3 units / stream	6
PV 101 8 inch dia x 6 element long @ 600 psi working pressure rating	2 nos
PV 102 8 inch dia x 4 element long @ 900 psi working pressure rating	2 nos
Brackish water membranes	12 nos
Sea Water membranes	10 nos
T 107 U.F CIP tank of 2,000 liters capacity	1 no
T 112 R.O CIP tank of 2,500 liters capacity	1 no
P 116 Filter Press Feed Pump, 2.0 m3/hr, 5 bar operating pressure with all accessories and fittings	2 nos
FP 101 Filter Press, 2,000 lph feed flow rate, 4 bar operating pressure with all accessories and fittings	2 nos

P	23.11.16		
REV	DATE	DESCRIPTION	PPD. / CKD. / APPD.

CPIIUC

CHENNAI PHARMA INDUSTRIAL INFRASTRUCTURE UPGRADATION COMPANY

REV: P — SHEET 1 OF 1 — SHEET: A1

PROJECT: COMMON EFFLUENT TREATMENT FACILITY AT SIDCO COMPLEX, ALATHUR

SCALE : 1:1

TITLE: PROCESS FLOW CHART

DRG. NO.

FILE:

पी डी आई एल PDIL

PROJECTS & DEVELOPMENT INDIA LTD. NOIDA

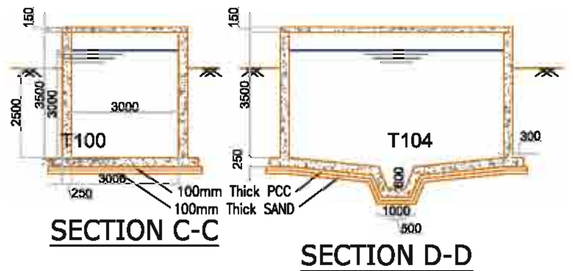

SECTION C-C

SECTION D-D

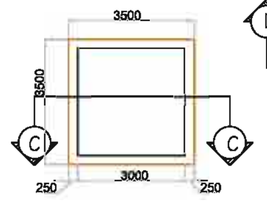

PLAN (T100)

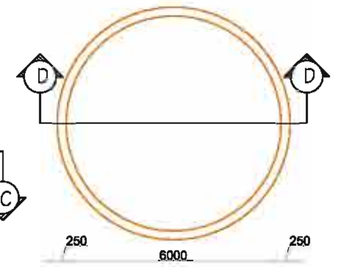

PLAN (T104)

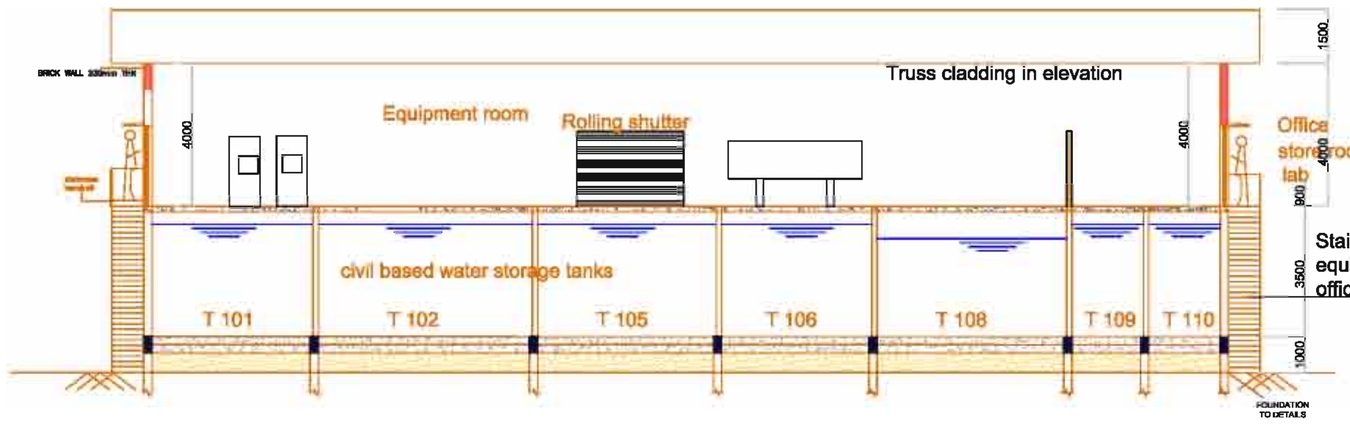

TYPICAL SECTION

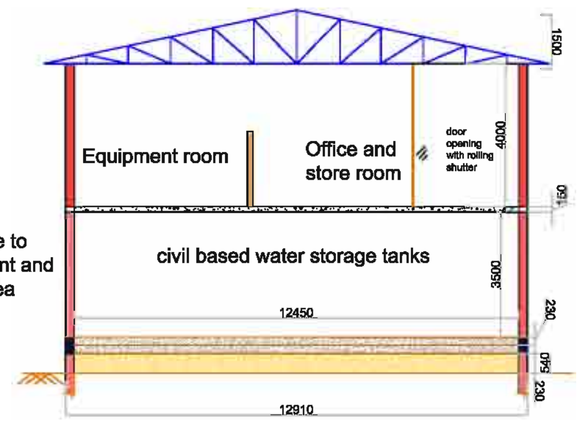

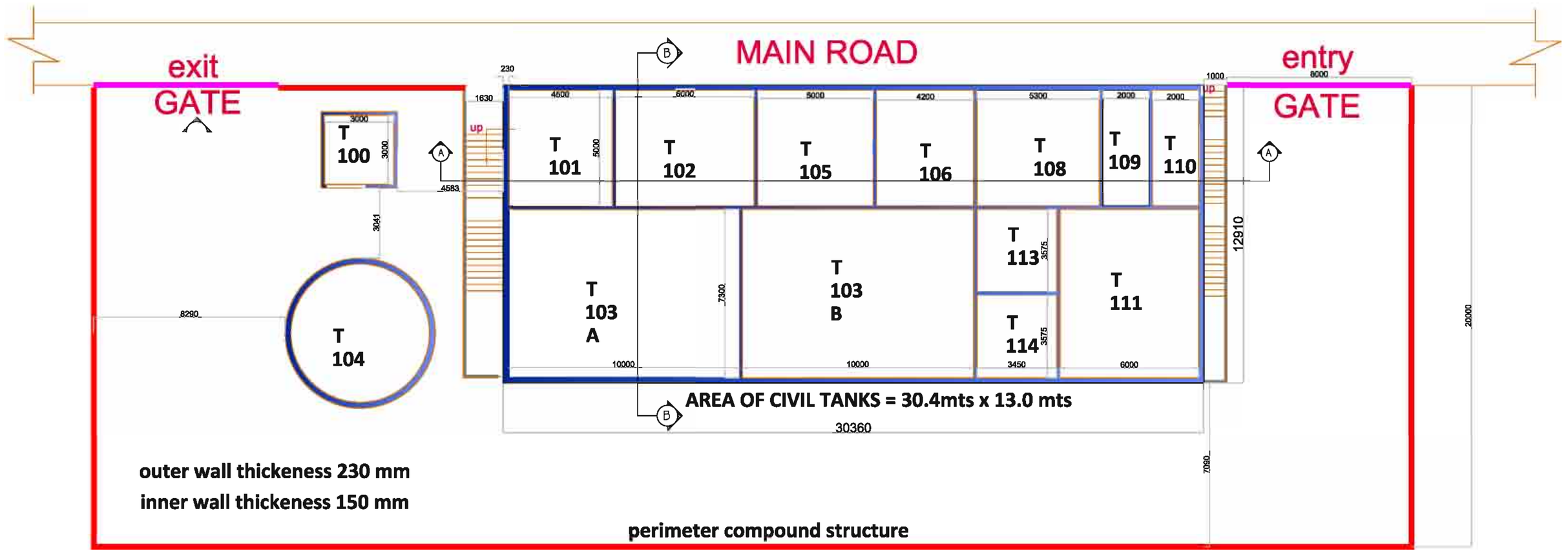

Tag #	Sump Description	Indicative Size	Tag #	Sump Description	Indicative Size
T 100	Raw sewage collection sump	3.0m x 3.0m x 2.2m LD + 1.5m FB	T 108	U.F. treated water sump	5.0 m x 5.3 m x 3m LD + 0.5m FB
T 101	Effluent collection sump	5.0m x 4.5m x 3m LD + 0.5m FB	T 109	R.O. Stage 1 Feed Sump	5.7m x 2.0 m x 3m LD + 0.5m FB
T 102	Common effluent collection sump	5.0m x 6.0m x 3m LD + 0.5m FB	T 110	R.O. Stage 2 Reject Sump	5.7m x 2.0 m x 3m LD + 0.5m FB
T 103 a/b	Extended aeration tanks	10.0m x 7.3m x 3m LD + 0.5m FB	T 111	Final treated water storage sump	7.3 m x 6.0m x 3m LD + 0.5m FB
T 104	Secondary clarifier	6.0m dia x 2.8 m LD + 0.7m FB	T 113	backwash waste holding sump	3.5 m x 3.4 m x 3m LD + 0.5m FB
T 105	Tertiary feed sump	5.0 m x 5.0 m x 2.6m LD + 0.9m FB	T 114	solids holding sump	3.5 m x 3.4 m x 3m LD + 0.5m FB
T 106	U.F. Feed sump	5.0 m x 4.2 m x 3m LD + 0.5m FB			

chennai pharma industrial infra upgradation company, chennai

Common Effluent Treatment Plant

INDICATIVE PLANT LAYOUT

REV	DATE	DESCRIPTION	PPD.	CKD.	APPD.
P	23.11.16	ISSUED FOR TENDER			

CPIIUC — CHENNAI PHARMA INDUSTRIAL INFRASTRUCTURE UPGRADATION COMPANY

REV P | SHEET 1 OF 1 | SHEET: A1

PROJECT: PROPOSED COMMON EFFLUENT TREATMENT FACILITY AT SIDCO COMPLEX, ALATHUR

SCALE :

TITLE: CIVIL LAYOUT

DRG. NO.

FILE:

PDIL — PROJECTS & DEVELOPMENT INDIA LTD. NOIDA

THIS DRAWING IS THE PROPERTY OF PROJECTS & DEVELOPMENT INDIA LIMITED AND NOT TO BE COPIED OR REPRODUCED OR SHOWN TO THIRD PARTIES WITHOUT THE WRITTEN PERMISSION OF P.D.I.L.

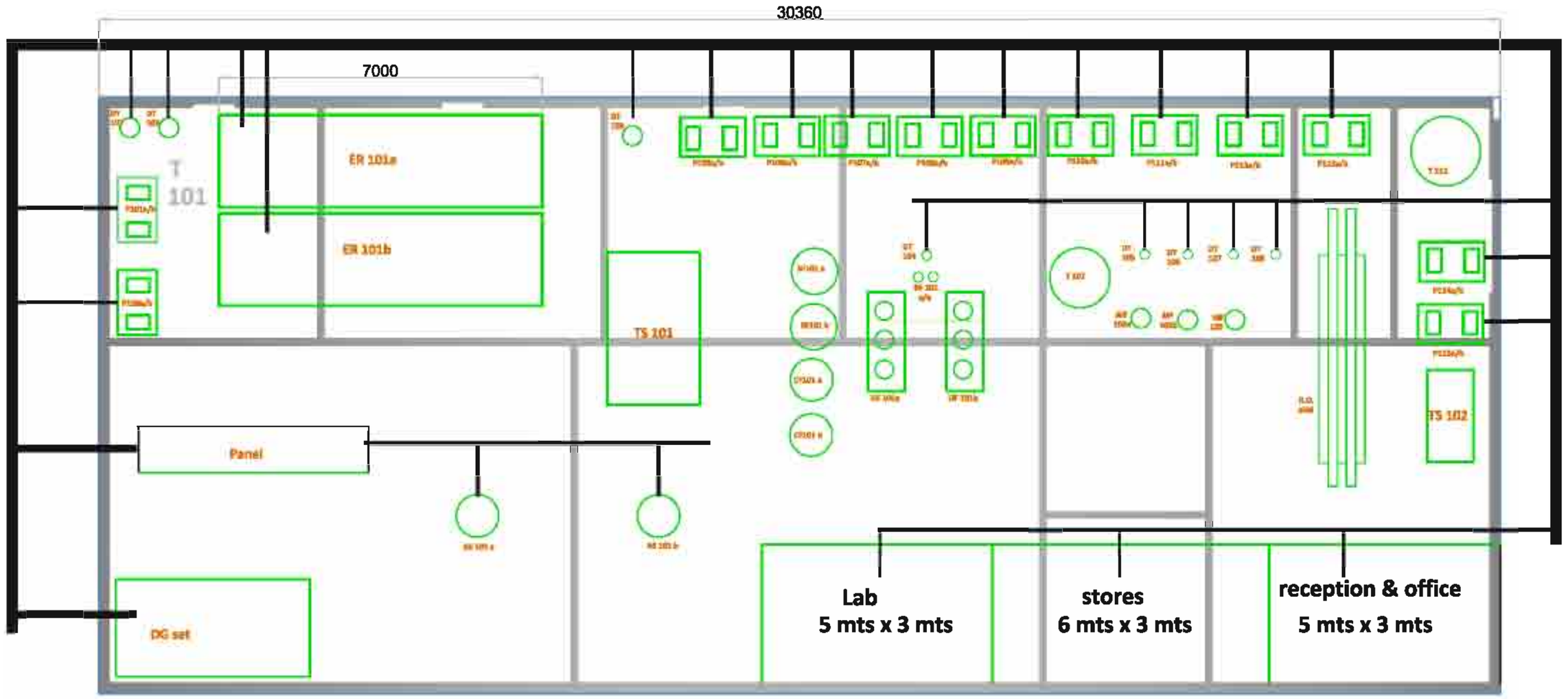

chennai pharma industrial infra upgradation company, chennai

Common Effluent Treatment Plant

Indicative Cable Routing

ROUTING SHOWN IS ONLY INDICATIVE for cable length and costing purposes. Vendor can decide on alternative routing. Cables will be INSIDE the PEB only... The routing is shown outside the PEB only for clarity....

REV	DATE	DESCRIPTION	PPD.	CKD.	APPD.
P	23.11.18	ISSUED FOR TENDER			

CHENNAI PHARMA INDUSTRIAL INFRASTRUCTURE UPGRADATION COMPANY

REV P

SHEET 1 OF 1

SHEET: A1

PROJECT: COMMON EFFLUENT TREATMENT FACILITY AT SIDCO PHARMCEUTICAL COMPLEX, ALATHUR

TITLE: CABLE ROUTING LAYOUT

DRG. NO.

FILE:

PROJECTS & DEVELOPMENT INDIA LTD. NOIDA

THIS DRAWING IS THE PROPERTY OF PROJECTS & DEVELOPMENT INDIA LIMITED AND NOT TO BE COPIED OR REPRODUCED OR SHOWN TO THIRD PARTIES WITHOUT THE WRITTEN PERMISSION OF P.D.I.L.

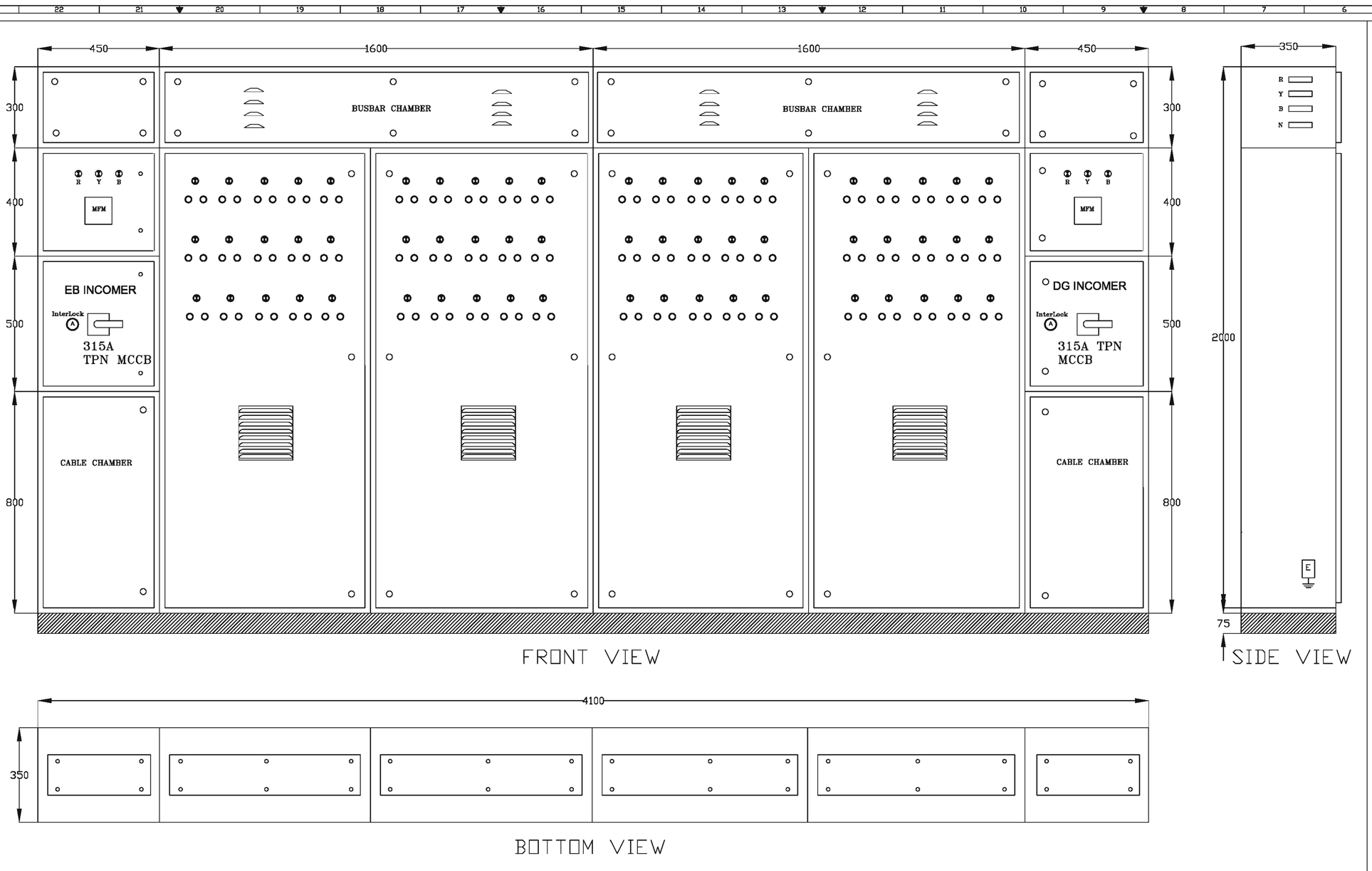

"All Dimensions are in mm"

Chennai Pharmaceutical
Industrial Infrastructure Company

Common Effluent Treatment Plant

Indicative M.C.C. Panel Layout

REV	DATE	DESCRIPTION	PPD.	CKD.	APPD.
P	23.11.16	ISSUED FOR TENDER			

CHENNAI PHARMA INDUSTRIAL INFRASTRUCTURE UPGRADATION COMPANY

REV P
SHEET 1 OF 1
SHEET: A1

PROJECT:
COMMON EFFLUENTTREATMENT FACILITY AT SIDCO COMPLEX, ALATHUR

TITLE:
PANEL BASIC LAYOUT

DRG. NO.

FILE:

PROJECTS & DEVELOPMENT INDIA LTD.
NOIDA

THIS DRAWING IS THE PROPERTY OF PROJECTS & DEVELOPMENT INDIA LIMITED AND NOT TO BE COPIED OR REPRODUCED OR SHOWN TO THIRD PARTIES WITHOUT THE WRITTEN PERMISSION OF PDIL.

THIS DRAWING IS THE PROPERTY OF PROJECTS & DEVELOPMENT INDIA LIMITED AND NOT TO BE COPIED OR REPRODUCED OR SHOWN TO THIRD PARTIES WITHOUT THE WRITTEN PERMISSION OF PDIL.

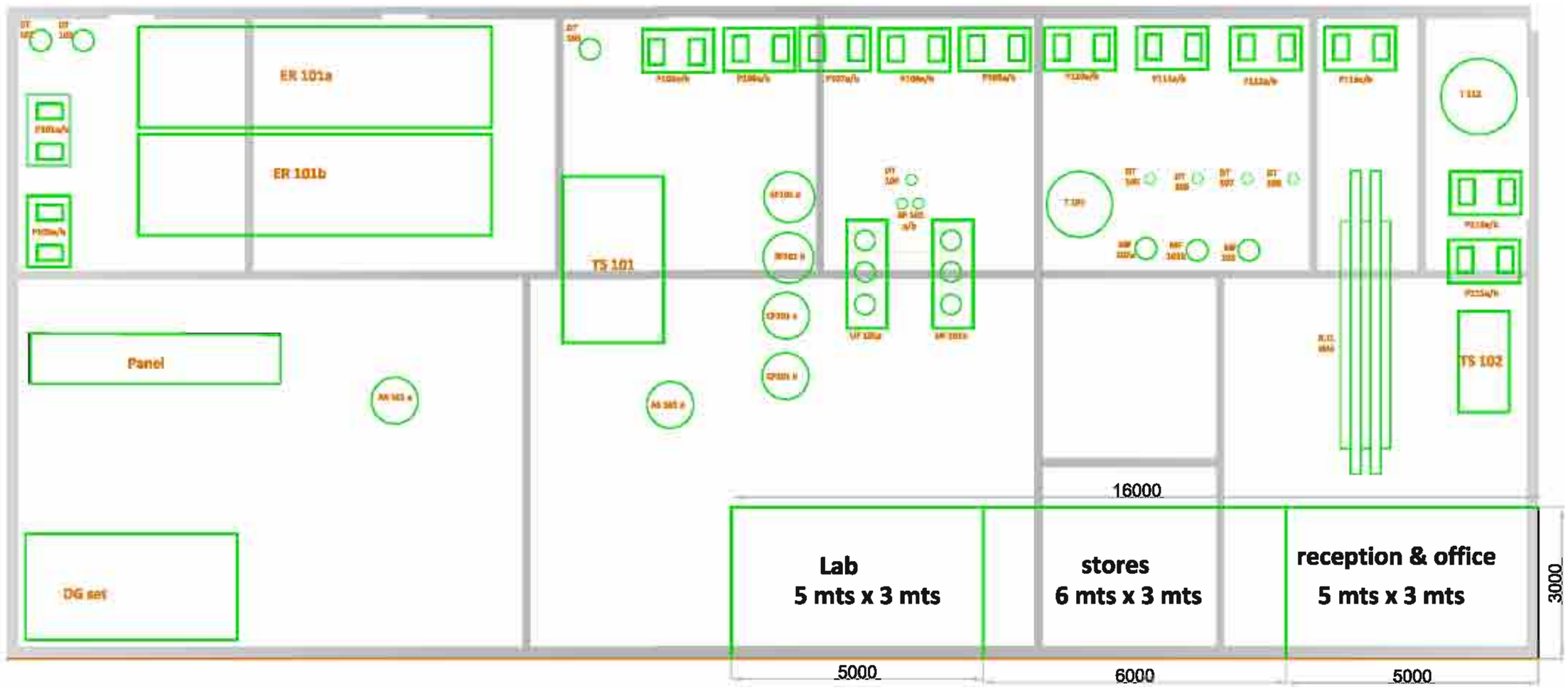

chennai pharma industrial infra upgradation company, chennai	**Common Effluent Treatment Plant**		**Indicative Layout Plant & Machinery Shed**	

REV	DATE	DESCRIPTION	PPD.	CKD.	APPD.
P	23.11.16	ISSUED FOR TENDER			

CHENNAI PHARMA INDUSTRIAL INFRASTRUCTURE UPGRADATION COMPANY

REV P | SHEET 1 OF 1 | SHEET: A1

PROJECT: COMMON EFFLUENT TREATMENT FACILITY AT SIDCO COMPLEX, ALTHUR

TITLE: MACHINERY LAYOUT

DRG. NO.

FILE:

PROJECTS & DEVELOPMENT INDIA LTD. NOIDA

MAKES OF MAJOR PROCESS UNITS

The desired makes of certain core equipment in the project is given below

These are to be taken in conjunction with the makes of equipment mentioned in the relevant sections of the tender document.

HORIZONTAL CENTRIFUGAL PUMPS - Non Clog, Open Impeller pumps	Kirloskar / CRI / Johnson / KSB
HORIZONTAL CENTRIFUGAL PUMPS - Clear Water Pumps	Kirloskar / CRI / Johnson / KSB
HORIZONTAL CENTRIFUGAL PUMPS - C.I.P. Pumps	CNP / CRI / ANALA
HORIZONTAL CENTRIFUGAL PUMPS - Non Clog Open Impeller in S.S. wetted parts	Kirloskar / CRI / Johnson / KSB / Grundfos
VERTICAL CENTRIFUGAL PUMPS -R.O. feed high pressure pumps	Grundfos / CRI /equivalent
DOSING TANKS	Sintex / equivalent
Electronic metering DOSING PUMPS	Tacmina / Asia LMI / equivalent
Aspirating aerators	PFC / CNP / equivalent
Sand and Carbon Filters	Aquanomics / Pentair / Jess
R.O. membranes	LG / Hydranautics / Koch / Filmtec
U.F. membranes	Inge / Hydranautics / TEAM
Bag and Micron Filters	Geofluid Processors / Filter Concept / equivalent
Filter Press	Swarn Shankar Associates / equivalent
Electrical Panel and electrical works	S L Electricals
Rigid PVC Pipes	Finolex / Equivalent ISI brand